aerospace
climate control
electromechanical
filtration
fluid & gas handling
hydraulics
pneumatics
process control
sealing & shielding

Gas Mass Flow Control Products

Parker Porter

ENGINEERING YOUR SUCCESS.

Parker Porter

The Standard of Excellence in Mass Flow

Porter Mass Flow products reflect over four decades of experience in the design and manufacture of precision instruments for the measurement and control of gas flow. They incorporate design principles that are simple and straightforward, yet flexible enough to operate under a wide variety of process parameters. The result is flowmeters, flow controllers and control valves that are accurate, reliable and cost-effective solutions for many gas mass flow applications in the analytical, process, chemical/petro-chemical, environmental, biophamaceutical and research markets.

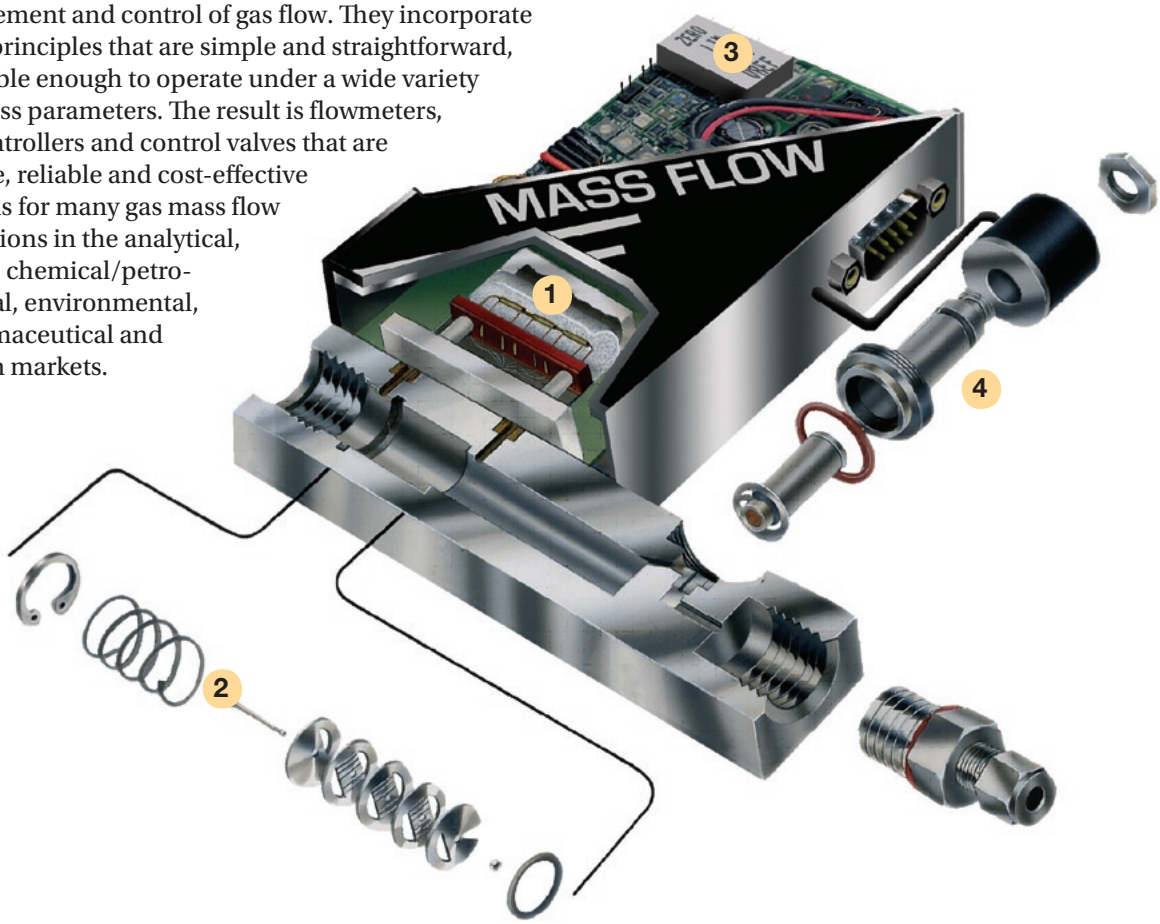

Features

1. **Removable Three Wire Sensor** – Reliable drift free performance, easy replacement and attitude insensitivity.
2. **Unique Laminar Flow Element Package** – Individually scaled for inherent linearity at all flow ranges.
3. **Choice of Control Circuitry** – Analog or digital controls with multiple I/O and power options allow configuration versatility. Card edge connection is available for retrofit applications.
4. **Simplified Valve Design** – Reliability and flexibility with a normally open option.

Products

500/600 Series Mass Flow Meters and Controllers

The same quality and reliability as our 100/200 Series described below, with the added benefit of microprocessor electronics. They feature percent of reading accuracy, multi-gas capability and fast response with Analog, Modbus, DeviceNet and Profibus communication options.

Full scale flow rates from 5 SCCM up to 1000 SLPM. (See detailed specifications on page 5 and available capacities on page 3.)

100/200 Series Mass Flow Meters and Controllers

The latest evolution of the original Porter Analog MFC. With thousands installed worldwide, they are the proven solution when cost effective high performance gas flow control is the goal. The 100 Series Mass Flow Meters are available for applications where flow measurment only is required.

Full scale flow rates from 5 SCCM up to 1000 SLPM with 0-5, 0-10 Vdc and 4-20 mAdc I/O options. (See detailed specifications on page 5 and available capacities on page 3.)

3600 Series Mass Flow Meters & Controllers

Digital MFC performance in a robust package designed for severe duty applications. NEMA 4x, IP66, Class 1, Div 2, IECex and Atex Zone 2 Certifications* are available along with a variety of I/O, power requirement and process connection options.

Full scale flow rates from 100 SCCM up to 100 SLPM. (See detailed specifications on page 5 and available capacities on page 3.)

* IEC and ATEX Certifications pending.

3200 Series Mass Flow Meters and Controllers

Compact size and Class 1, Div 2 certification makes the 3200 Series the ideal choice for low flow applications in hazardous locations. Available as either a direct mount SP-76 device or with in-line compression fittings. 4-20 mAdc I/O and 24 Vdc power.

Full scale flow rates from 10 SCCM up to 10 SLPM. (See detailed specifications on page 5 and available capacities on page 3.)

2200 Series Mass Flow Meters and Controllers

Low cost without compromise in performance. The aluminum and brass constructed 2200 Series features the same sensor, control electronics, flow elements and valve internals as the 200 Series at 30% lower cost.

Full scale flow rates from 40 SCCM up to 10 SLPM. (See detailed specifications on page 5 and available capacities on page 3.)

MPC Series Mass Flow Controllers

A unique concept in cost-efficient mass flow control. These units combine a fast and accurate mass flow controller with the necessary electronics for a complete closed-loop control system and user interface. All in a compact, panel mount, 1/16 DIN package.

Full scale flow rates of 0.5, 2.0, 5.0, and 20 SLPM. (See detailed specifications on page 5 and available capacities on page 3.)

Capacities

Type	Model	Max. Flow[1] (SLPM)	Max. Pressure[2] (PSIG)	Min. Delta[3] (PSIG)
Analog Flow Meters	111	10	1500	2
	121	10	3000	2
	112	100	1500	2
	122	100	3000	2
	113	500	1000	2
	114	1000	1000	2
	2111	10	200	2
	3211	10	1000	2
Analog Flow Controllers	201	10	1000	7
	221	10	3000	7
	251	50	1000	35
	202	100	1000	60
	222	100	3000	60
	202A	100	200	10
	203A	500	200	40
	204A	1000	200	80
	2201	10	200	7
	3201/3261	10	1000	7

Type	Model	Max. Flow[1] (SLPM)	Max. Pressure[2] (PSIG)	Min. Delta[3] (PSIG)
Digital Flow Meters	511	10	1500	2
	521	10	3000	2
	512	100	1500	2
	522	100	3000	2
	513	500	1000	2
	514	1000	1000	2
	3611	10	1500	2
	3612	100	1500	2
Digital Flow Controllers	601	10	1000	7
	621	10	3000	7
	651	50	1000	35
	602	100	1000	60
	602A	100	200	10
	603A	500	200	40
	604A	1000	200	80
	3601	10	1500	7
	3602	100	1500	30
	MPC	20	75	22

[1] The maximum full scale flow rate available.
[2] The maximum operating inlet pressure available.
[3] The minimum required pressure differential for maximum full scale flow rate.
NOTE: All flow and pressure specifications are based on N_2 gas. Consult factory for specifications on other gasses.

Accessories

Connector Kits

Part Number	Description
A-2420-000	**Card Edge Connector Kit.** Used to connect customer-fabricated cable assembly to an MFM/MFC, complete with card edge connector.
A-2420-001	**Nine (9)-Pin D-Connector Kit.** Used to connect customer-fabricated cable assembly to an MFM/MFC, complete with D-connector.
A-2420-002	**Fifteen (15)-Pin D-Connector Kit.** Used to connect customer-fabricated cable assembly to Model CM-4000.

General Purpose Power Supplies (+15 Vdc)

Part Number	Description
PS-2-115VAC	For use with up to four (4) Mass Flowmeters or two (2) Mass Flow Controllers
PS-4-115	For use with up to four (4) Mass Flow Controllers

Control Module

Part Number	Description
CM-400	4 Channel Power Supply/Setpoint Control Module. 110/240 VAC (See page 6)

Cable Assemblies

Part Number	Length (in ft.)	MFM/MFC Connector Type	Connects To
KC18040-010	10	Card Edge	Customer Supplied Electronics**
KC18040-025	25		
KC18040-050	50		
C-700-002	10	D-Type	Customer Supplied Electronics**
C-700-003	25		
C-700-004	50		
C-1666-010	10	D-Type	CM-400
C-1666-025	25		

**Electronics end is finished by tinning each conductor contained in the cable. Electrical connector for electronics is supplied separately, either by Porter Instrument or by customer. Refer to Connector Kits pricing for available electrical connectors.

Specifications

Series>>	100/200	2200	3200	500/600	3600	MPC
Flow Capacity	See Capacity Chart, page 3					
Response Time (per SEMI E17-91 Settling Time)	2 to 3 Seconds	3 to 4 Seconds	2 to 3 Seconds	1 to 2 Seconds		1 Second
Accuracy and Linearity	±1% full scale*	±2% full scale	±1% full scale	±1.0% of reading (20%-100% full scale) ±0.8% of reading plus ±0.2% full scale (below 20% full scale)		±1% full scale
Repeatability	Within ±0.2% full scale at any constant temperature within operating temperature range					±1% full scale
Rangeability (Control Range)	50:1 (2%-100% full scale) (accuracy and control)					4-100% full scale (MPC 95, MPC024) 2-100% full scale (MPC05, MPC20)
Ambient and Operating Temperature Range	10°C to 70°C (14°F to 158°F)					-10°C to 50°C (14°F to 122°F)
Maximum Operating Pressure	See Capacity Chart, Page 3					
Temperature Coefficient (per SEMI E18-91)	±0.05% full scale/°C of zero, ±0.05% of reading/°C of span					±0.1% FS/°C
Pressure Coefficient (per SEMI E28-92 Total Calibration Effect)	±0.1%/Atmosphere Typical using N_2					.2%-2% F.S./Atm. (Model & flow dependant)
Mounting Orientation	Attitude insensitive					Horizontal, Top up
Warm-up Time	10 Minutes					N/A
External Electrical Connector	9 pin "D" (Edge card optional on 100/200 Series)		10-foot, 22 AWG, 8-conductor power-limited tray cable, stripped and tinned ends	9 pin "D"	Turck minifast and eurofast, (model dependant)	Screw Terminals
Setpoint Input/Flow Signal Output	0-5 Vdc, 0-10 Vdc, 4-20 mAdc, 1-5 Vdc/4-20 mAdc		4-20 mAdc	Same as 100/200 Series plus Modbus, Profibus, DeviceNet.		Touch Pad data entry, LED display, 0-5 Vdc & 1-5 Vdc external inputs
Power Supply Requirements	+12-15 Vdc (0-5 Vdc I/O), +15-24 Vdc (4-20 mAdc I/O)		+15-24 Vdc <250 mAdc			24 Vdc, <300 mAdc

* ±1.5% for Models 114 and 204A

Materials of Construction

Series>>	100/200	2200	3200	500/600	3600	MPC
Body	316 SS	Aluminum	316 Stainless Steel			Brass
Sensor Assembly	316L Stainless Steel					MEMS
Orifice	316 SS	Brass	316 Stainless Steel			Brass
Valve Components (Wetted)	302 Stainless Steel, 316 Stainless Steel, 430F Stainless Steel and Sandvik® 1802					Brass
Elastomers (O-rings and Valve Seat)	Same as 3200	Same as 3200, less Kalrez	Buna N, EPDM, Kalrez®, Neoprene or Viton®			Viton
Process Connections	316 SS	Brass & Aluminum	316 Stainless Steel			Brass

Model CM-400 MFC Power Supply/Control Module

Porter Model CM-400 is a high performance microprocessor based 4-channel power supply/control module designed for use with Porter Mass Flow Meters and Controllers. An 8-line, backlit LCD display provides selectable data on the status of the 4 channels simultaneously; low noise, thermal overload protected +15 Vdc device power is provided on each channel. The CM-400 accepts user selectable current or voltage input signals and supplies a selectable setpoint signal for each channel. In addition to the analog I/O, a digital communication port is included for computer/PLC interface. A programmable multi-channel blend control and totalizer with batch function allows the CM-400 to precisely interact with Porter MFCs in a versatile and functional gas management system.

For further information, see Bulletin FM-1180.

Product Features and Options:

- 4 Independent Channels
- Displays in Selectable Engineering Units
- Multiple I/O Configurations
- Programmable Gas Correction Factors
- Programmable Multi-Channel Blend Control
- Totalizer and Batch Control
- +15 Vdc MFC Power Output
- 110/240 Vac Operation

Ordering Information

Analog Mass Flow Meters/Controllers

Use the following guides to determine the specific product number you require.

Example: 251-FWASVYAA

This example part numer describes a 251 model gas flow meter, factory revision F, with a stainless steel body, 9 Pin "D" (CE) PC board connector, 0-5 Vdc setpoint and output signal, Viton® elastomers and 1/4" A-LOK® fitting.

Example: 2201AAAVC1AA

This part number describes a 2201 model gas flow meter, factory revision A, with an aluminum/brass body, 0-5 Vdc setpoint and output signal, Viton® elastomers, and 1/8" female NPT fitting.

251-	F	W	A	S	V	☒	Y	AA
2201	A	☒	A	A	V	C	1	AA

Model
See Capacity Table

Revision Level
(Factory Specified)

Special Features
AA Factory Standard (Factory Specified)

Body Materials	100 – 200	3200	2200
A Aluminum, Brass			•
S 316 Stainless Steel	•	•	

Flow Designator	100 – 200	3200	2200
(Factory Specified)			•

PC Board Connector	100 – 200	3200	2200
F Card Edge	•		
K 9 Pin "D"	•		
R CSA Approved Cable		•	
X No PC Board	•		
W 9 Pin "D" (CE)	•		

Setpoint/ Output Signal	100 – 200	3200	2200
A 0-5 Vdc/ 0-5 Vdc	•		•
B 1-5 Vdc/ 4-20 mAdc (sinking)	•		•
G 10-10 Vdc/ 10-10 Vdc	•		•
H 4-20 mAdc/ 4-20 mAdc (sourcing)	•	•	•
X Not applicable (valve only)	•		

Elastomers (Valve Seat/ O-Rings)	100 – 200	3200	2200
B Buna N/ Buna N	•	•	•
E EPDM/ EPDM	•	•	•
K Kalrez®/ Kalrez®	•	•	
N Neoprene/ Neoprene	•	•	•
V Viton®	•	•	•

Fitting Size/Type	100 – 200	3200	2200
A 3/8" CPI™	•	•	
B 1/8" Compression	•	•	
C 1/4" Compression	•	•	
D 3/8" Compression	•	•	
E 1/2" Compression	•		
F 1/2" CPI™	•		
G 3/4" Compression	•		
H 10mm Compression	•	•	
I 1/4" CPI™	•	•	
O 1/8" Female NPT	•		
P 1/4" MMGFS	•		
Q 3/8" MMGFS	•		
S 1/2" MMGFS	•		
U 3/8" A-LOK®	•	•	
V 1/2" A-LOK®	•		
W 6mm Compression	•	•	
X No Fittings	•	•	
Y 1/4" A-LOK®	•	•	
Z Special Fittings	•		
1 1/8" Female NPT			•
2 3/4" A-LOK®	•		
2 1/8" Compression (brass)			•
3 12mm Compression	•		
4 1/4" Compression (brass)			•
6 1/8" A-LOK®	•	•	
7 1/8" CPI™	•	•	
8 1/4" VacuSeal™	•	•	
9 1/2" VacuSeal™	•		

The following page provides ordering information for Digital Mass Flow Meters/Controllers.

MORFS = male O-ring face seal
MMGFS = male metal gasket face seal

A-Lok® is a registered trademarks of the Parker Hannifin Corporation;
CPI™, UltraSeal™ and VacuSeal™ are trademarks of the Parker Hannifin Corporation.

Ordering Information

Digital Mass Flow Meters/Controllers

Use the following guides to determine the specific product number you require.

Example: 601-AAMSVYAA

This example part numer describes a 601 model gas flow meter, factory revision A, with a stainless steel body, a standard response time (1 to 2 seconds), a Modbus (+24 Vdc) setpoint and output signal, Viton® elastomers and 1/4" A-LOK® fitting.

Example: 3602AAAWVUAA

This part number describes a NEMA 4x, IP66 certified 3602 model gas flow meter, factory revision A, with a standard response time (1 to 2 seconds), a 0-5 Vdc (+24 Vdc) setpoint and output signal, Viton® elastomers and 3/8" A-LOK® fitting.

601-	A	A	M	S	☒	V	Y	AA
3602	A	A	A	☒	W	V	U	AA

Model
See Capacity Table

Revision Level
(Factory Specified)

Response Time	500 – 600	3600
A 1 to 2 Seconds (Standard)	•	•
B 500 msec (Optional)	•	

Body Materials	500 – 600	3600
S 316 Stainless Steel	•	

Elastomers (Valve Seat/ O-Rings)	500 – 600	3600
B Buna N/ Buna N	•	•
E EPDM/ EPDM	•	•
K Kalrez®/ Kalrez®	•	•
N Neoprene/ Neoprene	•	•
V Viton®	•	•

Special Features
AA Factory Standard (Factory Specified)

Setpoint/ Output Signal	500 – 600	3600
A 0-5 Vdc (+15 Vdc)	•	•
B 0-5 Vdc (+24 Vdc)	•	•
C DeviceNet (+15 Vdc)	•	•
D DeviceNet (+24 Vdc)	•	•
E 0-10 Vdc (+15 Vdc)	•	•
F 0-10 Vdc (+24 Vdc)	•	•
G 4-20 mAdc (sourcing) (+15 Vdc)	•	•
H 4-20 mAdc (sourcing) (+24 Vdc)	•	•
L Modbus (+15 Vdc)	•	•
M Modbus (+24 Vdc)	•	•
P Profibus DP (+24 Vdc)	•	•
R Profibus DP (+15 Vdc)	•	•

Certifications	500 – 600	3600
W NEMA 4x, IP66		•
Y NEMA 4x, IP66, Class 1 Div 2,		•

Consult factory for IEC and ATEX Certification availability.

Fitting Size/Type	500 – 600	3600
A 3/8" CPI™	•	•
B 1/8" Compression	•	•
C 1/4" Compression	•	•
D 3/8" Compression	•	•
E 1/2" Compression	•	•
F 1/2" CPI™	•	•
G 3/4" Compression	•	•
H 10mm Compression	•	•
I 1/4" CPI™	•	•
P 1/4" MMGFS	•	•
Q 3/8" MMGFS	•	•
S 1/2" MMGFS	•	
U 3/8" A-LOK®	•	•
V 1/2" A-LOK®	•	•
W 6mm Compression	•	•
X No Fittings	•	•
Y 1/4" A-LOK®	•	•
Z Special Fittings	•	•
2 3/4" A-LOK®	•	
3 12mm Compression	•	•
6 1/8" A-LOK®	•	•
7 1/8" CPI™	•	•
8 1/4" VacuSeal™	•	•
9 1/2" VacuSeal™	•	

The previous page provides ordering information for Analog Mass Flow Meters/Controllers.

MORFS = male O-ring face seal
MMGFS = male metal gasket face seal

A-Lok® is a registered trademarks of the Parker Hannifin Corporation;
CPI™, UltraSeal™ and VacuSeal™ are trademarks of the Parker Hannifin Corporation.

Dimensions

200/600/2200 Series Flow Controllers

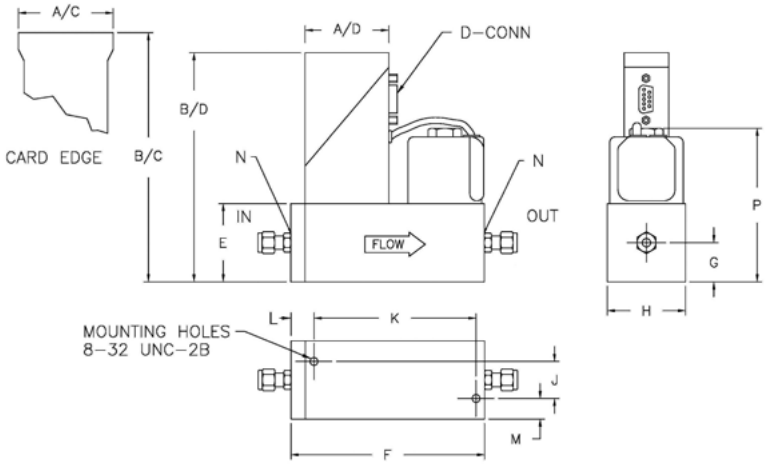

Model	A/C	A/D	B/C	B/D	E	F	G	H	J	K	L	M	N	P
201/601	2.11	1.83	4.897	4.520	1.125	3.005	.500	1.000	.720	2.720	.145	.140	9/16 - 18	2.218
202/602	2.11	1.83	5.522	5.145	1.750	4.335	.875	1.750	.828	3.634	.511	.461	9/16 - 18	3.569
221	2.11	1.83	5.522	5.145	1.750	4.015	.875	1.750	.828	3.634	.191	.461	9/16 - 18	3.569
222	2.11	1.83	5.522	5.145	1.750	4.335	.875	1.750	.828	3.634	.511	.461	9/16 - 18	3.569
251/651	2.11	1.83	5.272	4.895	1.500	3.005	.750	1.000	.720	1.897	.963	.140	9/16 - 18	3.066
2201	N/A	1.83	N/A	4.511	1.125	3.005	.500	1.000	.720	2.720	.145	.140	1/8" FNPT	2.800

100/500/2200 Series Flow Meters

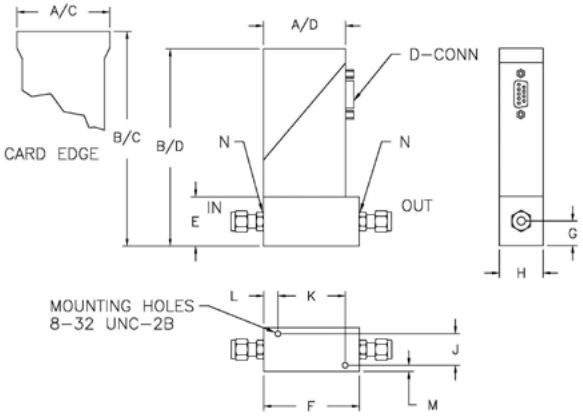

Model	A/C	A/D	B/C	B/D	E	F	G	H	J	K	L	M	N
111/511	2.11	1.83	4.897	4.520	1.125	2.187	.500	1.000	.720	1.540	.324	.140	9/16 - 18
112/512	2.11	1.83	5.522	5.145	1.750	2.564	.875	1.750	.828	1.862	.511	.461	9/16 - 18
113/513	2.11	1.83	5.272	5.895	2.500	3.739	1.250	2.500	1.318	2.953	.590	.591	3/4 - 16
114/514	2.11	1.83	6.272	5.895	2.500	5.174	1.250	2.500	1.318	2.953	1.307	.591	3/4 - 16
121	2.11	1.83	4.897	4.520	1.125	2.187	.500	1.000	.720	1.540	.324	.140	9/19 - 18
122	2.11	1.83	5.522	5.145	1.750	2.564	.875	1.750	.828	1.862	.511	.461	9/16 - 18
123	2.11	1.83	7.022	6.645	3.250	4.055	1.675	3.250	1.318	2.953	.906	.966	3/4 - 16
2211	N/A	1.83	N/A	4.511	1.125	1.900	.500	1.000	.720	1.633	.145	.140	1/8" FNPT

Dimensions

200A/600A Series Flow Controllers

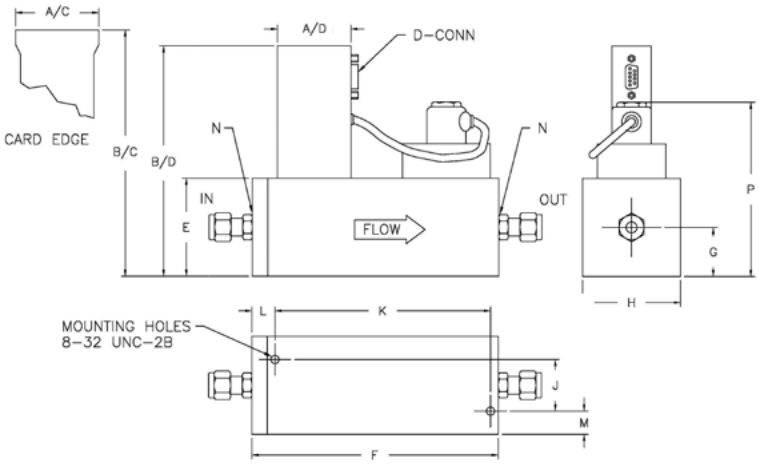

Model	A/C	A/D	B/C	B/D	E	F	G	H	J	K	L	M	N	P
202A/602A	2.11	1.83	5.647	5.270	1.875	5.241	.875	1.875	.828	4.539	.511	.523	9/16 - 18	3.770
203A/603A	2.11	1.83	6.272	5.895	2.500	6.299	1.250	2.500	1.318	5.512	.590	.591	3/4 - 16	4.395
204A/604A	2.11	1.83	6.272	5.895	2.500	6.299	1.250	2.500	1.318	5.512	.590	.591	3/4 - 16	4.395

3200 Series
Flow Meters/Controllers

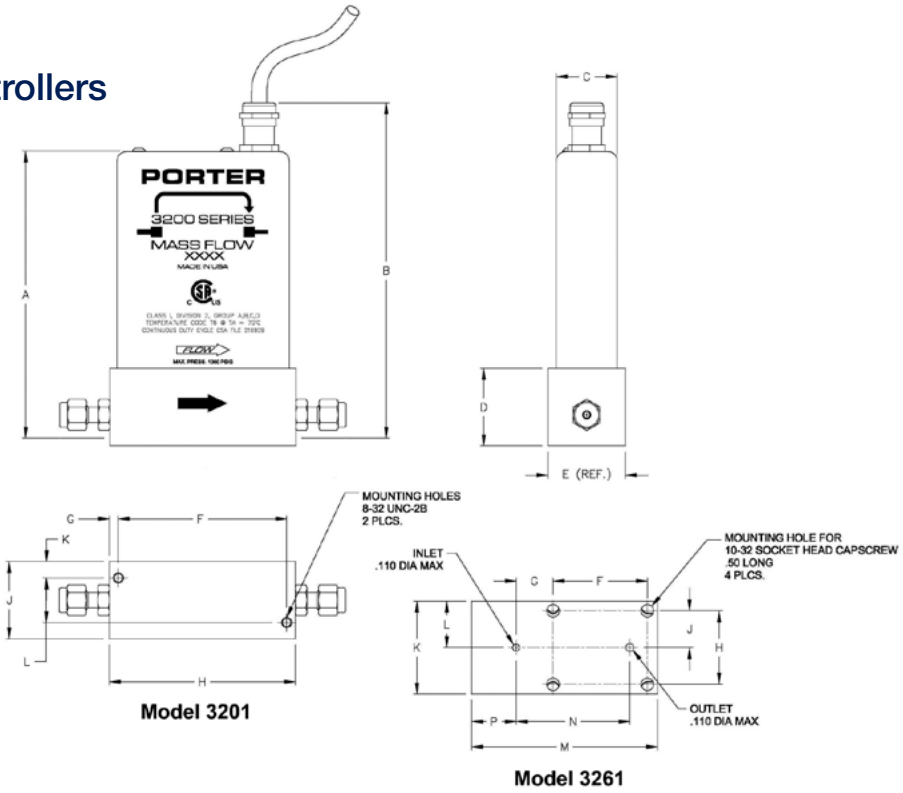

Model	A/C	A/D	B/C	B/D	E	F	G	H	J	K	L	M	N	P
3201/3211	4.63	6.00	.98	1.25	1.25	2.72	.145	3.005	1.250	.265	.720			
3261/3271	4.63	6.00	.98	1.13	1.50	1.53	.594	1.188	.594	1.500	.750	3.000	1.835	.720

Dimensions

3600 Series Flow Meters/Controllers

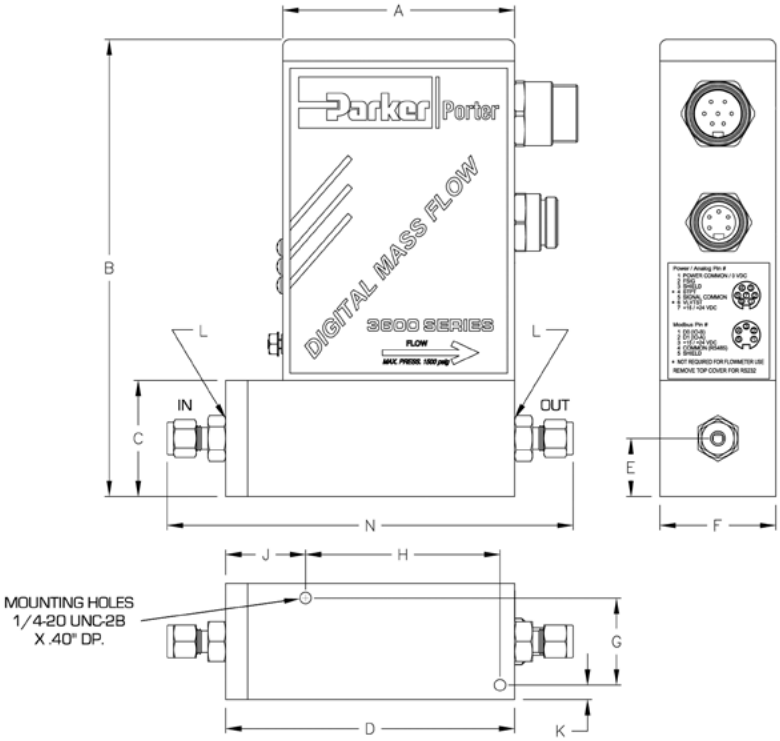

Model	A	B	C	D	E	F	G	H	J	K	L
All	4.000	7.875	2.000	4.982	1.000	2.000	1.500	3.355	1.377	.250	9/16 - 18

MPC Series Flow Controllers

Model	Height	Width	Depth	Cut-Out
All	1.889	1.889	2.98	1.772 x 1.772

Electrical Connections

100/200 Series (9 Pin "D")

PIN #	Function
1	ABZ Disable/ Reference Voltage
2	Flow Signal Output
3	Setpoint Input
4	Signal Common
5	Valve Test/SIM VO Open
6	Not Used
7	Power In
8	Power Common
9	Shield (Ground)

3200 Series (Certified Cable Assembly)

Wire #	Function
1/One Black	Flow Signal Output
1/One Red	ABZ Disable
2/Two Black	Power In
2/Two Red	Setpoint Input
3/Three Black	Power Common
3/Three Red	Signal Common
4/Four Black	Not Used
4/Four Red	Valve Test

600/700 Series (9 Pin "D")

PIN #	Function
1	TXD (RS-232
2	Flow Signal Output
3	Setpoint Input
4	Power Common
5	Valve Test
6	RXD (RS-232
7	Power In
8	Signal Common
9	Shield (Ground)

MPC Series (9 Pin Terminal Connector)

PIN #	Function
1	Power In
2	Power Common
3	Event Output 1
4	Event Output 2
5	External Switch Input 1
6	External Switch Input 2
7	Optional Setoint Input
8	Flow Signal Output
9	Signal Common

⚠ WARNING – USER RESPONSIBILITY

FAILURE OR IMPROPER SELECTION OR IMPROPER USE OF THE PRODUCTS DESCRIBED HEREIN OR RELATED ITEMS CAN CAUSE DEATH, PERSONAL INJURY AND PROPERTY DAMAGE.

This document and other information from Parker-Hannifin Corporation, its subsidiaries and authorized distributors provide product or system options for further investigation by users having technical expertise.

The user, through its own analysis and testing, is solely responsible for making the final selection of the system and components and assuring that all performance, endurance, maintenance, safety and warning requirements of the application are met. The user must analyze all aspects of the application, follow applicable industry standards, and follow the information concerning the product in the current product catalog and in any other materials provided from Parker or its subsidiaries or authorized distributors.

To the extent that Parker or its subsidiaries or authorized distributors provide component or system options based upon data or specifications provided by the user, the user is responsible for determining that such data and specifications are suitable and sufficient for all applications and reasonably foreseeable uses of the components or systems.

Offer of Sale

The items described in this document are hereby offered for sale by Parker-Hannifin Corporation, its subsidiaries or its authorized distributors. This offer and its acceptance are governed by the provisions stated in the detailed “Offer of Sale” elsewhere in this document or available at www.parker.com/offerofsale.

© 2011 Parker Hannifin Corporation

Parker Porter

ENGINEERING YOUR SUCCESS.