A Complete Range of Solenoid Valves for Fluid Control

General Catalogue

aerospace
climate control
electromechanical
filtration
fluid & gas handling
hydraulics
pneumatics
process control
sealing & shielding

Parker

ENGINEERING YOUR SUCCESS.

> 5,000

Product references

This catalogue is a comprehensive list of Parker FCDE products. It will help to identify appropriate valves and coils and enable the user to generate ordering numbers.

The catalogue is intended for use by Parker Sales personnel with the aim to select the most suitable solenoid valves for customers.

WARNING - USER RESPONSIBILITY

FAILURE OR IMPROPER SELECTION OR IMPROPER USE OF THE PRODUCTS DESCRIBED HEREIN OR RELATED ITEMS CAN CAUSE DEATH, PERSONAL INJURY AND PROPERTY DAMAGE.

- This document and other information from Parker-Hannifin Corporation, its subsidiaries and authorized distributors provide product or system options for further investigation by users having technical expertise.
- The user, through its own analysis and testing, is solely responsible for making the final selection of the system and components and assuring that all performance, endurance, maintenance, safety and warning requirements of the application are met. The user must analyze all aspects of the application, follow applicable industry standards, and follow the information concerning the product in the current product catalog and in any other materials provided from Parker or its subsidiaries or authorized distributors.
- To the extent that Parker or its subsidiaries or authorized distributors provide component or system options based upon data or specifications provided by the user, the user is responsible for determining that such data and specifications are suitable and sufficient for all applications and reasonably foreseeable uses of the components or systems.

Who we are?

The Fluid Control Division in Europe (FCDE) is a division of Parker Hannifin, the global leader in motion and control technologies.

FCDE core competences are the development and manufacturing of an extremely diverse range of fluid control products, including solenoid valves and pressure regulators.

Where we are?

Our European headquarters are located in Geneva, this is also where our R&D, Marketing, Application Support and Product Management functions are located.

FCDE Products are mainly manufactured at locations in Carouge (Geneva - Switzerland) and Gessate (Milan - Italy).

The Parker Sales Companies and comprehensive distribution network support you, wherever you are.

History

Parker FCDE has been a leading player in the manufacturing and development of solenoid valve technologies for over 60 years, with continuous research and development bringing innovative solutions to the marketplace, for example leading the way in the utilisation of synthetic ruby for critical water applications or the unsurpassed reliability and precision of our pressure regulators. The expertise accumulated and developed through the years is evident in the superior quality of FCDE solutions.

Markets

Our products and solutions are typically designed for markets including Industrial Equipment, Industrial Automation, Mobile, Transportation, Life Sciences, Beverage dispensing and for Fluid and Process Control.

Benefits

The modular concept of our products, having separate solenoid valves and electrical parts, provides the customer with increased flexibility by allowing numerous combinations. This additional flexibility can enable distributors to greater reduce valve inventory levels, whilst retaining the same number of capabilities. Parker also has unrivalled experience in developing customised product solutions complying with the highest technical, environmental, energy and service life requirements.

PARKER FCDE - GENEVA - SWITZERLAND

PARKER FCDE - MILAN - ITALY

TABLE OF CONTENT

INTRODUCTION

Markets and applications 06
A complete range of solenoid valves 08
A modular concept 10
ATEX Certification 12
World class standards 13
How to use this catalogue 14
How to select a valve 16
How to order 18
How to use coil groups 24

2 WAY VALVES

Valves for dry or lubricated air, neutral gases and liquids 27
Valves for water and neutral liquids 79
Anti water hammer valves 113
Hot water and steam valves 125
Valves for hydraulic oil and neutral liquids (up to 100 bar) 141
High corrosion resistant valves (303 Stainless Steel) 157
High corrosion resistant valves (316L Stainless Steel) 165
Oil burner valves 177
Fast switching valves 197
Valves for beverage dispensing - Liquipure® 201

3 WAY VALVES

Valves for dry or lubricated air, neutral gases and liquids 207
Valves for hydraulic oil and neutral liquids (up to 75 bar) 247
High corrosion resistant valves (303 Stainless Steel) 251
Valves for beverage dispensing - Liquipure® 257

2 & 3 WAY VALVES FOR TRANSPORTATION

2 way 265
3 way 271

5 WAY DISTRIBUTORS FOR PNEUMATIC APPLICATIONS

5 way pneumatic distributors (Pipe mounting/Sub-base mounting) 275

3 & 5 WAY PNEUMATIC DISTRIBUTORS FOR ACTUATION CONTROL

3 & 5 way pneumatic valves for actuator control (Pipe mounting) 301
3 & 5 way pneumatic valves for actuator control (NAMUR) 333
316L Stainless Steel 3 & 5 way valves for actuator control (Pipe mounting and NAMUR) 375

ELECTROPNEUMATIC PRESSURE REGULATORS

EPP4 Series - Basic, Comfort , Comfort ATEX Ranges 407

COILS, HOUSINGS & ELECTRICAL PARTS

Introduction 439
Coils 441
Explosion Proof Electrical Parts 483
Housings 518
Coil Accessories 522
Explosive Environments 524
Guidance Chart for IS-Barriers 534

TECHNICAL INFORMATION ABOUT SOLENOID VALVES

Technical information about solenoid valves 537

APPENDIX

Table of sub-bases for valves 558
Table of voltage codes for coils and electrical parts 564
Index by Coil Reference 568
Index by Coil Group 570
Index by Order Number 572
Index for Valves 574

MARKETS AND APPLICATIONS

In order to bring customers the best solution, Parker offers a wide range of products that can be divided into specific markets:

INDUSTRIAL & AUTOMATION

- Compressors
- Blowing
- Textile
- Pressure Regulation

PROCESS CONTROL

- Valve Actuation
- Oil & Gas
- On & Off-Shore
- Petro-Chimical
- Pharmaceutical

FOOD & BEVERAGE

- Professional Coffee Machines
- Sparkling Water
- Soft Drinks
- Water Dispensing

COOLING & CLIMATE CONTROL

- Water dispensing
- Cooling systems

TRANSPORTATION

- Trucks
- Trains
- Bus and Coach
- Marine
- Military
- Agriculture

LIFE SCIENCE

- Sterilizers / Autoclaves
- Breathing
- Water purification
- Table-top equipment

HEATING SYSTEMS

- Industrial Oil Burners
- Fuel Transfer
- Gas Transfer

A COMPLETE RANGE OF SOLENOID VALVES FOR FLUID CONTROL

2 WAY VALVES

- For dry or lubricated air, neutral gases and liquids
- For water and neutral liquids
- Anti water hammer
- Hot water and steam
- For hydraulic oil and neutral liquids (Max. 100 bar)
- High corrosion resistant
  (303 Stainless Steel)
  (316L Stainless Steel)
- Oil burner
- Fast switching
- Liquipure® for beverage dispensing

3 WAY VALVES

- For dry or lubricated air
- For hydraulic oil and neutral liquids (Max. 75 bar)
- High corrosion resistant
  (303 Stainless Steel)
- Liquipure® for beverage dispensing

2 & 3 WAY VALVES FOR TRANSPORTATION

- 2 way- direct and piloted
- 3 way- direct operated

5 WAY DISTRIBUTORS FOR PNEUMATIC APPLICATIONS

- Pipe mounted/ Sub-base mounting

3 & 5 WAY PNEUMATIC DISTRIBUTORS FOR ACTUATION CONTROL

- Pipe mounted
- NAMUR interface
- 316L Stainless Steel (Pipe mounted and with NAMUR interface)

COILS & ELECTRICAL PARTS

- Coils
- Housings
- Explosion-Proof Electrical Parts

EPP4 SERIES ELECTROPNEUMATIC PRESSURE REGULATORS

- Basic
- Comfort
- Comfort ATEX

A MODULAR CONCEPT FOR EVERY APPLICATION

CHOOSE BETWEEN:

Actuation Modes

- Direct Operated
- Magnalift
- Pilot Operated
- Manual Reset
- Externally Operated

Material Types

- Brass
- 303 Stainless St.
- 316L Stainless St.
- Anodized Aluminium
- Zinc Alloy
- POM

Mounting Solutions

- Pipe
- Sub-base
- NAMUR
- Banjo
- CETOP
- ISO

Control Functions

- Normally Closed
- Normally Open
- Universal
- Control by Electric Impulse
- Dual Solenoids
- PWM

Internal Design

- Piston
- Poppet
- Diaphragm
- Spool

Seals

- FKM
- NBR
- EPDM
- Ruby
- PUR
- PCTFE…

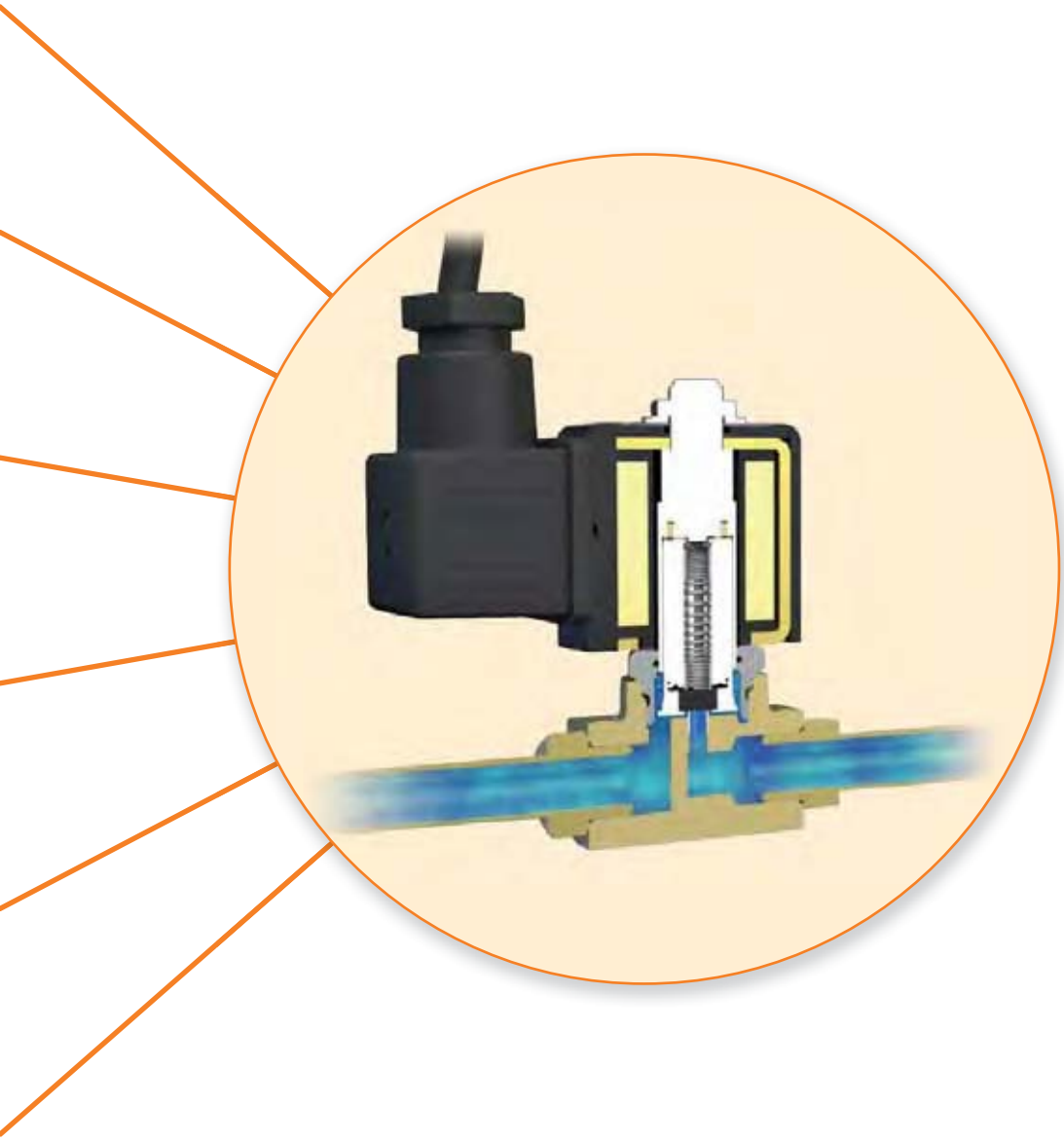

ELECTRICAL PART ATEX CERTIFICATION

A selection of FCDE electrical parts conform to the terms of the 94/9/EC directive and are made for potentially explosive environments - zone 0/20, 1/21 and 2/22.

Within the coil section, the presence of the ATEX logo shows that the coil is ATEX approved.

MECHANICAL PART ATEX CERTIFICATION

A selection of FCDE mechanical parts conform to the terms of the 94/9/CE directive specific to non electrical equipment for use within potentially explosive environments - zones 0/20, 1/21 and 2/22.

NAMUR & piped valve ranges now include a marking which indicates mechanical ATEX approval.

Within the valve section, the presence of the ATEX logo shows that the valve is ATEX approved.

SOLENOID VALVE CERTIFICATION

When both the electrical and mechanical part are ATEX approved, the solenoid valve can be used in explosive atmospheres.

The solenoid valve will be delivered assembled and tested.

PARKER FCDE IS MEETING WORLD CLASS STANDARDS

QUALITY STANDARDS:

- ISO 9001
- ISO 14001
- ISO TS 16949

CERTIFICATIONS AND APPROVALS:

Our products have been approved and are compliant with the relevant market requirements including:

- CE
- ATEX
- RoHS
- UL
- Reach
- IECEx
- CSA
- Gost
- SVGW
- DIN
- AGA
- TUV
- Kosha
- IMQ
- NSF
- VDE

HOW TO USE THIS CATALOGUE

This catalogue is a comprehensive list of Parker FCDE products. It will help to identify appropriate valves and coils and enable the user to generate ordering numbers. The catalogue is intended for use by Parker Sales personnel with the aim to select the most suitable solenoid valves for customers.

This catalogue is split by product family. You will find a summary page at the beginning of each valve section. For ease of use, each valve section is divided by application.

On the first page of each Application section, you will find an overview of the products within and their technical characteristics, to guide you to the relevant page (example below):

SECTION SUMMARY PAGE

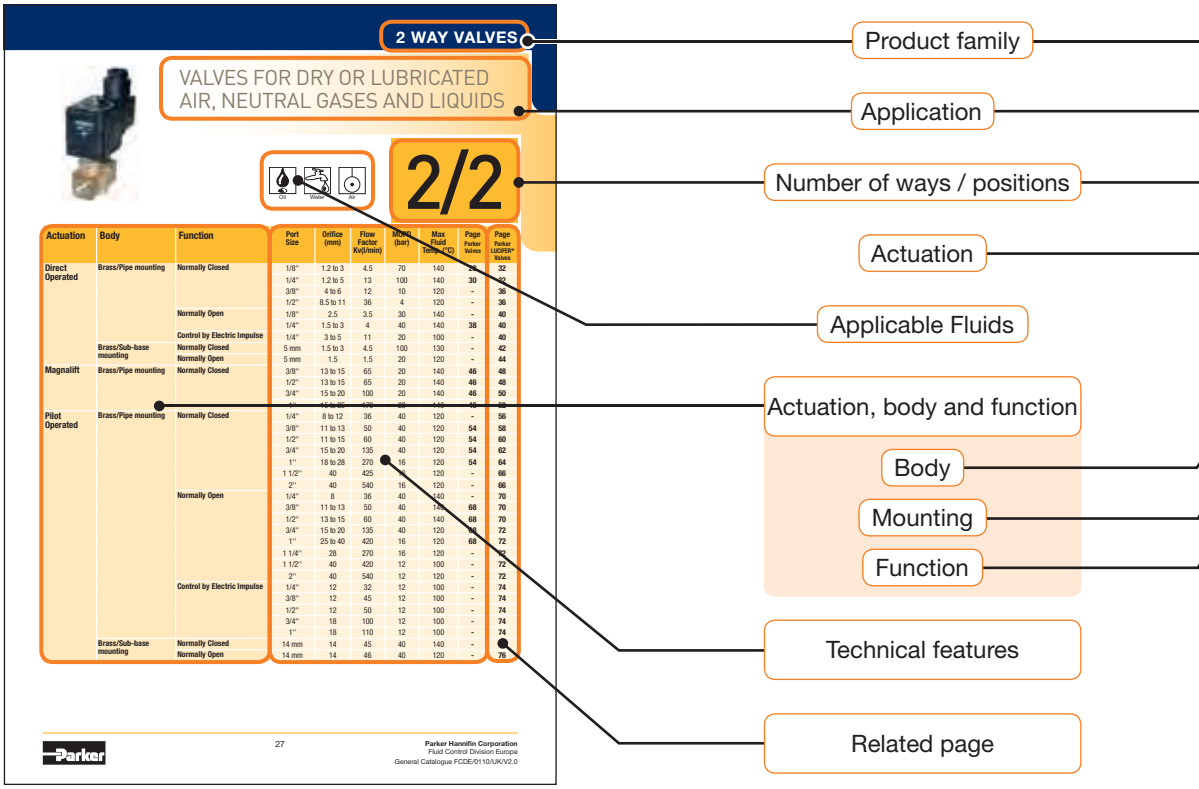

For further technical information regarding Actuation, Body and Function, please refer to the technical information section at the end of the catalogue.

Applicable **Markets** for this valve category

Applicable **Approvals** within this page

Quick selection table with Min/Max values for all valves on the page

SECTION PRODUCT PAGE

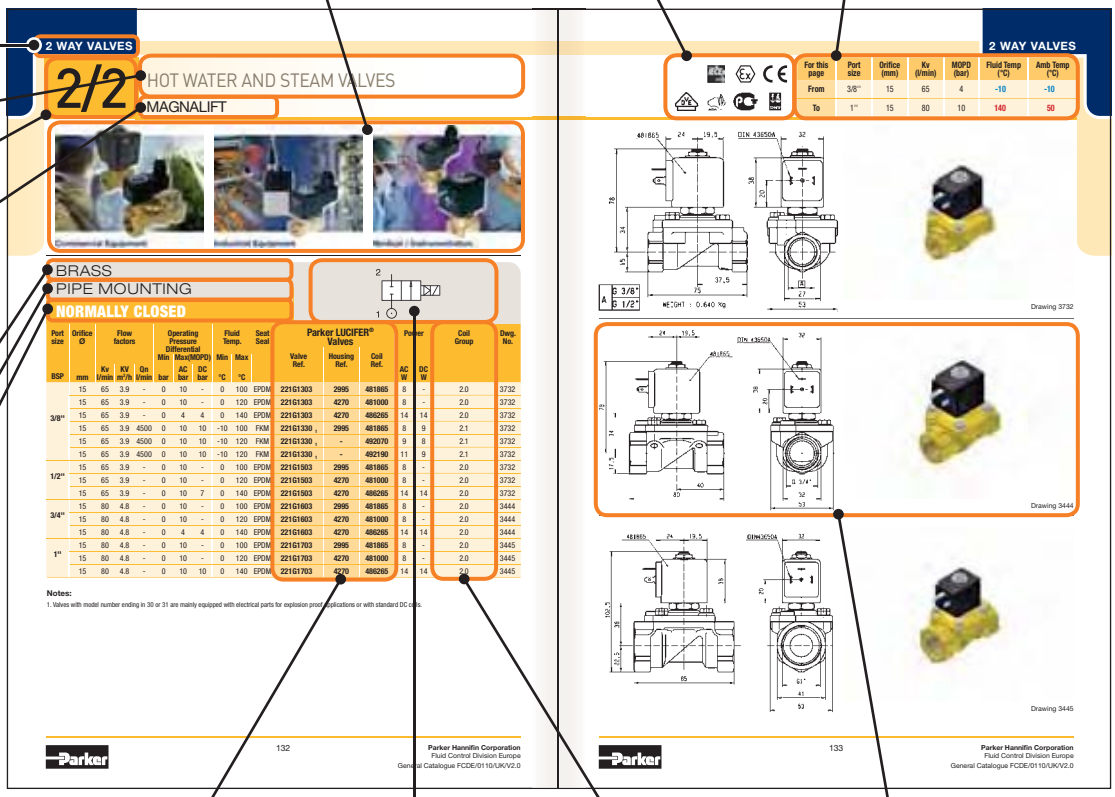

2 WAY VALVES

2/2 HOT WATER AND STEAM VALVES

MAGNALIFT

BRASS

PIPE MOUNTING

NORMALLY CLOSED

Port size BSP	Orifice Ø mm	Flow factors Kv l/min	KV m³/h	Qn l/min	Operating Pressure Differential Min bar	Max(MOPD) AC bar	DC bar	Fluid Temp. Min °C	Max °C	Seat Seal	Parker LUCIFER® Valves Valve Ref.	Housing Ref.	Coil Ref.	Power AC W	DC W	Coil Group	Dwg. No.
3/8"	15	65	3.9	-	0	10	-	0	100	EPDM	221G1303	2995	481865	8	-	2.0	3732
	15	65	3.9	-	0	10	-	0	120	EPDM	221G1303	4270	481000	8	-	2.0	3732
	15	65	3.9	-	0	4	4	0	140	EPDM	221G1303	4270	486265	14	14	2.0	3732
	15	65	3.9	4500	0	10	10	-10	100	FKM	221G1330	2995	481865	8	9	2.1	3732
	15	65	3.9	4500	0	10	10	-10	120	FKM	221G1330	-	492070	9	8	2.1	3732
	15	65	3.9	4500	0	10	10	-10	120	FKM	221G1330	-	492190	11	9	2.1	3732
1/2"	15	65	3.9	-	0	10	-	0	100	EPDM	221G1503	2995	481865	8	-	2.0	3732
	15	65	3.9	-	0	10	-	0	120	EPDM	221G1503	4270	481000	8	-	2.0	3732
	15	65	3.9	-	0	10	7	0	140	EPDM	221G1503	4270	486265	14	14	2.0	3732
3/4"	15	80	4.8	-	0	10	-	0	100	EPDM	221G1603	2995	481865	8	-	2.0	3444
	15	80	4.8	-	0	10	-	0	120	EPDM	221G1603	4270	481000	8	-	2.0	3444
	15	80	4.8	-	0	4	4	0	140	EPDM	221G1603	4270	486265	14	14	2.0	3444
1"	15	80	4.8	-	0	10	-	0	100	EPDM	221G1703	2995	481865	8	-	2.0	3445
	15	80	4.8	-	0	10	-	0	120	EPDM	221G1703	4270	481000	8	-	2.0	3445
	15	80	4.8	-	0	10	10	0	140	EPDM	221G1703	4270	486265	14	14	2.0	3445

Notes:
1. Valves with model number ending in 30 or 31 are mainly equipped with electrical parts for explosion proof applications or with standard DC coils.

For this page	Port size	Orifice (mm)	Kv (l/min)	MOPD (bar)	Fluid Temp (°C)	Amb Temp (°C)
From	3/8"	15	65	4	-10	-10
To	1"	15	80	10	140	50

Drawing 3732

Drawing 3444

Drawing 3445

Applicable **Ordering information**

ISO Symbol

A choice of **Coil Groups** compatible with the selected valve.

Dimensional 2D* and 3D drawings

* 2D drawing shown always corresponds to the standard coil.

HOW TO SELECT A VALVE

Once you are in the selected family 1 and application 2.

The table is designed to help you navigate to the products matching your criteria.

First decide the actuation 3, then move accross the table selecting your body material 4, function 5 and technical requirements 6.

After you have found products fiting within your specification, please go to the corresponding page number in the final column 7, here you will find a selection of products that match your criteria.

1 SELECT PRODUCT FAMILY

2 SELECT APPLICATION

3 SELECT ACTUATION

4 SELECT BODY

5 SELECT FUNCTION

6 SELECT TECHNICAL DATA

7 SELECT CORRESPONDING PAGE

1

2 WAY VALVES

VALVES FOR DRY OR LUBRICATED AIR, NEUTRAL GASES AND LIQUIDS

2

Oil Water Air

2/2

Actuation	Body	Function	Port Size	Orifice (mm)	Flow Factor Kv(l/min)	MOPD (bar)	Max Fluid Temp. (°C)	Page Parker Valves	Page Parker LUCIFER® Valves
Direct Operated	Brass/Pipe mounting	Normally Closed	1/8''	1.2 to 3	4.5	70	140	28	32
			1/4''	1.2 to 5	13	100	140	30	32
			3/8''	4 to 6	12	10	120	-	36
			1/2''	8.5 to 11	36	4	120	-	36
		Normally Open	1/8''	2.5	3.5	30	140	-	40
			1/4''	1.5 to 3	4	40	140	38	40
		Control by Electric Impulse	1/4''	3 to 5	11	20	100	-	40
	Brass/Sub-base mounting	Normally Closed	5 mm	1.5 to 3	4.5	100	130	-	42
		Normally Open	5 mm	1.5	1.5	20	120	-	44
Magnalift	Brass/Pipe mounting	Normally Closed	3/8''	13 to 15	65	20	140	46	48
			1/2''	13 to 15	65	20	140	46	48
			3/4''	15 to 20	100	20	140	46	50
			1''	15 to 25	170	20	140	46	52
Pil	Brass/P ting	Normally	1/4''	8 to 12		40	120	-	
			3/8''	11 to 13		0	120	54	
			1/2''	11 to 15		0	120	54	
			3/4''	15 to 20		40	120	54	
			1''	18 to 28	270	16	120	54	64
			1 1/2''	40	425	16	120	-	66
			2''	40	540	16	120	-	66
		Normally Open	1/4''	8	36	40	140	-	70
			3/8''	11 to 13	50	40	140	68	70
			1/2''	13 to 15	60	40	140	68	70
			3/4''	15 to 20	135	40	120	68	72
			1''	25 to 40	420	16	120	68	72
			1 1/4''	28	270	16	120	-	72
			1 1/2''	40	420	12	100	-	72
			2''	40	540	12	120	-	72
		Control by Electric Impulse	1/4''	12	32	12	100	-	74
			3/8''	12	45	12	100	-	74
			1/2''	12	50	12	100	-	74
			3/4''	18	100	12	100	-	74
			1''	18	110	12	100	-	74
	Brass/Sub-base mounting	Normally Closed	14 mm	14	45	40	140	-	76
		Normally Open	14 mm	14	46	40	120	-	76

3 4 5 6 7

HOW TO ORDER

BETWEEN TWO PRODUCT RANGES

7 SELECT CORRESPO

Parker [Blue Table]

2 WAY VALVES

2/2 VALVES FOR DRY OR LUBRICATED AIR, NEUTRAL GASES AND LIQUIDS
DIRECT OPERATED

BRASS
PIPE MOUNTING
NORMALLY CLOSED

Port size	Orifice Ø	Flow factors			Operating Pressure Differential Max(MOPD)			Fluid Temp.		Seat Seal	Parker Valves			Power		Coil Group	Dwg. No.
BSP	mm	Kv l/min	KV m³/h	Qn m³/h	Min bar	AC bar	DC bar	Min °C	Max °C		Valve Order Number	Valve Type	Coil Type	AC W	DC W		
1/8"	2.5	3.3	0.20	-	0	-	5	-10	140	FKM	**363380**	**PM146FV**	**ZB12**	-	12	20.1/20.2	034
	3	4.5	0.27	-	0	7	-	-10	140	FKM	**363390**	**PM146HV**	**ZB09**	9	-	20.1/20.2	034
	3	4.5	0.27	-	0	-	2	-10	140	FKM	**363390**	**PM146HV**	**ZB12**	-	12	20.1/20.2	034
	2.5	2.2	0.13	-	0	10	-	-10	140	FKM	**398006**$_1$	**N74.4WV**	**WB4.5** 230/50-60	4.5	-	1.3	065
	2.5	2.2	0.13	-	0	10	-	-10	140	FKM	**398007**$_1$	**N74.4WV**	**WB4.5** 24/50-60	4.5	-	1.3	065
	2.5	2.2	0.13	-	0	-	4	-10	140	FKM	**398008**$_1$	**N74.4WV**	**WB5.0** 120C	-	5	1.3	065
	2.5	2.2	0.13	-	0	-	4	-10	140	FKM	**398010**$_1$	**N74.4WV**	**WB5.0** 24DC	-	5	1.3	065
	2.5	2.2	0.13	-	0	19	-	-10	140	FKM	[illegible]						

- Designed for Industrial Automation applications
- ATEX applications only if indicated

Please order:
Valve + Coil

Order Separately

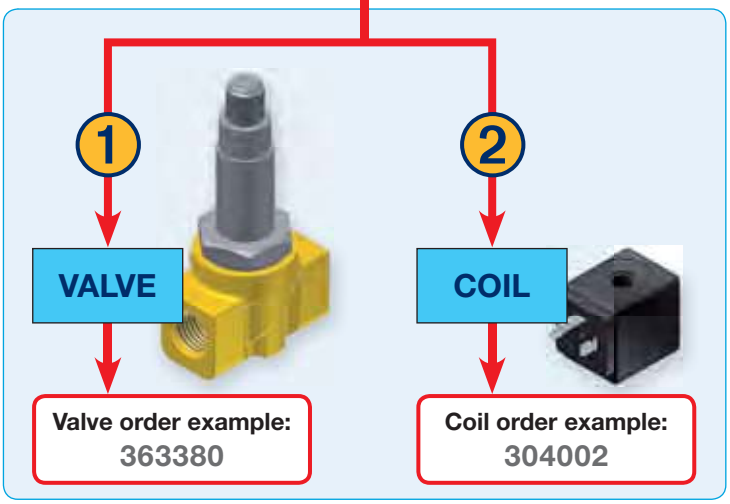

For more details, see page 20:
How to Order Parker Valves

CAUTION: For N74, N79, 131.4, 131, 175, 180, 161 valves series, the valve order number indicates assembled valve **and** coil for the voltage shown.

IMPORTANT: For assembled solenoid valves, please consult your local sales office.

NDING PAGE

Parker Lucifer® [Orange Table]

2 WAY VALVES

2/2 VALVES FOR DRY OR LUBRICATED AIR, NEUTRAL GASES AND LIQUIDS
DIRECT OPERATED

BRASS
PIPE MOUNTING
NORMALLY CLOSED

Port size	Orifice Ø	Flow factors			Operating Pressure Differential			Fluid Temp.		Seat Seal	Parker LUCIFER® Valves			Power		Coil Group	Dwg. No.
					Min	Max(MOPD)		Min	Max								
		Kv	KV	Qn		AC	DC				Valve Ref.	Housing Ref.	Coil Ref.	AC	DC		
BSP	mm	l/min	m³/h	l/min	bar	bar	bar	°C	°C					W	W		
	4	7.5	0.45	480	0	10	4	-10	100	FKM	121K3206	2995	481865	8	9	2.0	3551
	4	7.5	0.45	480	0	10	5	-10	120	FKM	121K3206	4270	481000	8	8	2.0	3551
	4	7.5	0.45	480	0	10	10	-10	120	FKM	121K3206	4270	486265	14	14	2.0	3551
	5	11	0.66	750	0	7	2	-10	100	FKM	121K3106	2995	481865	8	9	2.0	3551
3/8"	5	11	0.66	750	0	7	2.8	-10	120	FKM	121K3106	4270	481000	8	8	2.0	3551
	5	11	0.66	750	0	7	5	-10	120	FKM	121K3106	4270	486265	14	14	2.0	3551
	6	12	0.72	1100	0	5	1.1	-10	100	FKM	121K3306	2995	481865	8	9	2.0/14.2	3551
	6	12	0.72	1100	0	5	1.5	-10	120	FKM	[illegible]	[illegible]	[illegible]	[illegible]	[illegible]	[illegible]	[illegible]

- Thanks to the modular concept, a wide range of electrical parts can be used including ATEX, IECEx, IP67, H class, reduced power, UL/VDE approved
- For demanding applications in reliability, performance, quality
- High quality materials and execution

Please order:
Valve + Housing + Coil

One Order

1. **VALVE**
2. **HOUSING**
3. **COIL**

Valve and coil order example:

1	-	2	-	3
121K3206	-	2995	-	481865A2
Valve Reference		Housing		Coil and Voltage Code

For more details, see page 22:
How to Order Parker Lucifer® Solenoid Valves

HOW TO ORDER PARKER VALVES

A PARKER SOLENOID VALVE IS COMPOSED OF 2 ELEMENTS:

The **Valve** (1) and the **Coil** (2)

(1) **Use the valve order number (6 digits) to order the valve.**

Valve Order Number
363380
363390
363390

Valve order N° example:

363380

For a given valve, several coil types are being suggested.

For a wider choice, the selected valve is also compatible with every other coil from the same coil group.

2 WAY VALVES

2/2 VALVES FOR DRY OR LUBRICATED AIR, NEUTRAL GASES AND LIQUIDS
DIRECT OPERATED

BRASS
PIPE MOUNTING
NORMALLY CLOSED

Port size	Orifice Ø	Flow factors			Operating Pressure Differential			Fluid Temp.		Seat Seal	Parker Valves			Power		Coil Group	Dwg. No.
					Min	Max(MOPD)		Min	Max		Valve Order Number	Valve Type	Coil Type				
BSP	mm	Kv l/min	KV l/min	Qn m³/h	bar	AC bar	DC bar	°C	°C					AC W	DC W		
1/8"	2.5	3.3	0.20	-	0		5	-10	140	FKM	363380	PM146FV	ZB12	-	12	20.1/20.2	034
	3	4.5	0.27	-	0	7	-	-10	140	FKM	363390	PM146HV	ZB09	9	-	20.1/20.2	034
	3	4.5	0.27	-	0	-	2	-10	140	FKM	363390	PM146HV	ZB12	-	12	20.1/20.2	034
1/4"	2.5	2.2	0.13	-	0	10	-	-10	140	FKM	398006 1	N74.4WV	WB4.5 230/50-60	4.5	-	1.3	065
	2.5	2.2	0.13	-	0	10	-	-10	140	FKM	398007 1	N74.4WV	WB4.5 24/50-60	4.5	-	1.3	065
	2.5	2.2	0.13	-	0	-	4	-10	140	FKM	398008 1	N74.4WV	WB5.0 12DC	-	5	1.3	065
	2.5	2.2	0.13	-	0	-	4	-10	140	FKM	398010 1	N74.4WV	WB5.0 24DC	-	5	1.3	065
	2.5	2.2	0.13	-	0	19	-	-10	140	FKM	398012 1	N74.4WV	WB8.0 230/50-60	8	-	1.3	065
	3	4.5	0.27	-	0	7	-	-10	140	FKM	363444	PM146YV	ZB09	9	-	20.1/20.2	035
	3	4.5	0.27	-	0	-	2	-10	140	FKM	363444	PM146YV	ZB12	-	12	20.1/20.2	035
	4.5	9	0.53	-	0	6	-	-10	140	FKM	363457	PM146.3KV	ZB14	14	-	20.2	035
	4.5	9	0.53	-	0	-	2.5	-10	140	FKM	363457	PM146.3KV	ZB16	-	16	20.2	035
	6	13	0.75	-	0	6	-	-10	140	FKM	363467	PM146.3ABV	ZB14	14	-	20.2	035
	6	13	0.75	-	0	-	1	-10	140	FKM	363467	PM146.3ABV	ZB16	-	16	20.2	035

Notes:
1. Ordering number is for an assembled valve and coil, with the voltage shown.

2 Use the coil order number (6 digits) to order the coils

Choose the coil and use the 6 digits order number to order.

VAC/Hz	Order Number
ZB09 24/50-60	304004
ZB09 12/50-60	304002
ZB09 230/50-60	304012

Coil order N° example:

304002

COILS

COIL GROUP

20.1

COILS FOR
DIN PLUG CONNECTION

ZB COIL SERIES

These coils can be mounted with every Parker solenoid valves corresponding to the specified Coil Group.
See column "Coil Group" within valve pages.

Coil manufactured with H class copper wire, moulded in thermoplastic material polyester with 30% glass fiber.
IP65 protection rate with EN 175301-803:2006-A. Three pin connector.

This coil conforms to the IEC/CENELEC safety standards and complies with European low-voltage directive.

For UL recognized version: UL file MH19410.

DIN plug connector to be ordered separately (see coil accessories section).

Specification			Standard	UL recognized version
Reference (without DIN plug)			ZB09/ZB12	ZB09 for AC only
Coil Group			20.1	
Degree of protection			**IP65** according to IEC / EN 60529 standards (with DIN plug and gasket)	
Class of insulation			F 155°C	
Electrical connection			The coil is connected with a 2 P + E plug according to EN 175301-803 - type A	
Ambient temperature			-10°C to +50°C The application is limited also by the temperature range of the valve.	
Elect. Power	DC	P (cold) 20°C	12 W	
	AC	P (cold) 20°C	9 W	
		Attraction coil	25 VA	
Weight			130 g	

Voltages "Un"	VAC/Hz	Order Number	VDC	Order Number	VAC/Hz	Order Number
-10% to +10% of Un for AC - 5 % to + 10 % for Un DC.	ZB09 24/50-60	304004	ZB12 12DC	304018	ZB09 24/60	304048
	ZB09 12/50-60	304002	ZB12 24DC	304020	ZB09 110-120/60	304011
	ZB09 230/50-60	304012	ZB12 110DC	304022	ZB09 208-240/60	304051
	ZB09 115/50-60	304010	ZB12 48VDC	304021		
	ZB09 100/50-60	304009				
	ZB09 240/50-60	304014				
	ZB09 48/50-60	304008				
	ZB09 110-120/60	304011				
	ZB09 380/50-60	304016				

To Order a Coil: Use 6 digits ordering number - **Code Example:** ZB09 24/50-60 = **304004**
More voltage possibilities can be found in the table of voltage codes at the end of the coil section.

460

Parker Hannifin Corporation
Fluid Control Division Europe
General Catalogue FCDE/0110/UK/V2.0

Coil section at the end of the catalogue

IMPORTANT: For assembled solenoid valves, please consult your local sales office.

HOW TO ORDER
PARKER LUCIFER® SOLENOID VALVES

A PARKER LUCIFER® SOLENOID VALVE IS COMPOSED OF 3 ELEMENTS:

The **Valve** (1) + **Housing** (2) + **Coil** (3)

1. Choose the valve reference
2. Choose the housing
3. Choose the coil

(1) Choose the Valve Reference.

Valve Ref.
121K3206
121K3206
121K3206

(2) Select the housing depending on the protection level (IP 44 to IP 67 found in the coil section)

Housing Ref.
2995
4270
4270

2 WAY VALVES

2/2 VALVES FOR DRY OR LUBRICATED AIR, NEUTRAL GASES AND LIQUIDS
DIRECT OPERATED

BRASS
PIPE MOUNTING
NORMALLY CLOSED

Port size	Orifice Ø	Flow factors			Operating Pressure Differential			Fluid Temp.		Seat Seal	Parker LUCIFER® Valves			Power		Coil Group	Dwg. No.
					Min	Max(MOPD)		Min	Max								
BSP	mm	Kv l/min	KV m³/h	Qn l/min	bar	AC bar	DC bar	°C	°C		Valve Ref.	Housing Ref.	Coil Ref.	AC W	DC W		
3/8"	4	7.5	0.45	480	0	10	4	-10	100	FKM	121K3206	2995	481865	8	9	2.0	3551
	4	7.5	0.45	480	0	10	5	-10	120	FKM	121K3206	4270	481000	8	8	2.0	3551
	4	7.5	0.45	480	0	10	10	-10	120	FKM	121K3206	4270	486265	14	14	2.0	3551
	5	11	0.66	750	0	7	2	-10	100	FKM	121K3106	2995	481865	8	9	2.0	3551
	5	11	0.66	750	0	7	2.8	-10	120	FKM	121K3106	4270	481000	8	8	2.0	3551
	5	11	0.66	750	0	7	5	-10	120	FKM	121K3106	4270	486265	14	14	2.0	3551
	6	12	0.72	1100	0	5	1.1	-10	100	FKM	121K3306	2995	481865	8	9	2.0/14.2	3551
	6	12	0.72	1100	0	5	1.5	-10	120	FKM	121K3306	4270	481000	8	8	2.0/14.2	3551
	6	12	0.72	1100	0	5	3	-10	120	FKM	121K3306	4270	486265	14	14	2.0/14.2	3551
1/2"	8.5	25	1.5	1600	0	1.1	0.5	-10	100	FKM	E121K46	2995	481865	8	9	2.0	3427
	8.5	25	1.5	1600	0	2.2	0.5	-10	120	FKM	E121K46	4270	481000	8	8	2.0	3427
	8.5	25	1.5	1600	0	4	1.2	-10	120	FKM	E121K46	4270	486265	14	14	2.0	3427
	11	36	2.16	2500	0	0.7	0.3	-10	100	FKM	E121K45	2995	481865	8	9	2.0	3427
	11	36	2.16	2500	0	1.2	0.35	-10	120	FKM	E121K45	4270	481000	8	8	2.0	3427
	11	36	2.16	2500	0	2.5	0.7	-10	120	FKM	E121K45	4270	486265	14	14	2.0	3427

Notes:
1. Valve compatible with water only up to 40°C
2. With manual override

For a given valve, several coil types are being suggested.

For a wider choice, the selected valve is also compatible with every other coil from the same coil group.

Parker Lucifer® coils are available in many different voltages.
Choose the one you need by putting the voltage code at the end of your ordering number.

3 Choose the coil and voltage code.

Coil Ref.

481865

Voltage Code

VAC/Hz	Code
24/50	A2
48/50	A4
110/50	A5
220-230/50	3D

Valve and coil order example:

1 - 2 - 3

121K3206 - 2995 - 481865A2

Valve Reference | Housing | Coil and Voltage Code

COILS

COIL GROUP **2.0/2.1** COILS FOR DIN PLUG CONNECTION

COILS 32 mm

These coils can be mounted with every Parker solenoid valves corresponding to the specified Coil Group.
See column "Coil Group" within valve pages.

This is an encapsulated assembly comprising a coil, integral magnetic iron path and snap-on plug connection.

The synthetic material encapsulation provides an effective compact housing, offering full protection against dust, oil, water, etc.
Ease of mounting in confined space - offers shock and corrosion protection - simplifies conversion of existing equipment to other requirements, etc.
Coils conform to the IEC/CENELEC safety standards and complies with European low-voltage directive.

Specification		Standard	Double frequency
Ref. (without DIN plug) Ref. (with DIN plug)		481865 482725	483510 482635
Coil Group		2.0 / 2.1	
Degree of protection		**IP65** according to IEC / EN 60529 standards (with DIN plug).	
Class of insulation		F 155°C	
Electrical connection		The coil is connected with a 2 P + E plug according to EN 175301-803 type A	
Ambient temperature		-40°C to +50°C The application is limited also by the temperature range of the valve.	
Elect. Power	DC Pn (hot)	9 W	-
	DC P (cold) 20°C	12 W	-
	AC Pn (holding)	8 W	9 W
	AC Attraction cold	26 VA (9 W)	32 VA (10 W)
Weight		130 g (without plug)	

Voltages "Un"	VAC/Hz	Code	VDC	Code	VAC/Hz	Code
-10% to +10% of the Un	24/50 48/50 110/50 220-230/50	A2 A4 A5 3D	24 48 110	C2 C4 C5	24/50, 24/60 48/50, 48/60 110-115/50, 120/60 220-240/50, 240/60	P0 S4 S5 S6

To Order a Coil choose Coil Ref + Voltage Code, example: 481865 for 24 VDC = **481865C2**
More voltage possibilities can be found in the table of voltage codes at the end of the coil section.

These coils must be used with suitable housings, see example below:

The coil assembly kit **Ref. 2995** corresponds to the "housing" of Lucifer® valve numbering system (Valve - housing - coil/voltage).

It is composed of a nameplate giving details of the valve type, a round washer and a nut to ensure the fixing between 32 mm coil and the valve.

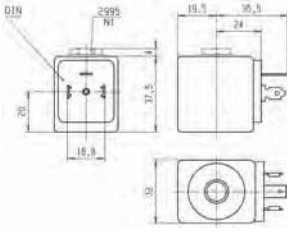

446

Parker Hannifin Corporation
Fluid Control Division Europe
General Catalogue FCDE/0110/UK/V2.0

IMPORTANT: Valve, Housing or Coil can be ordered separately for use as a replacement or spare part.

HOW TO USE COIL GROUPS

WITHIN A VALVE PAGE

One of Parker's strengths is the modularity, adaptability and flexibility of our products.
When you select a solenoid valve, the coils displayed in the table have been chosen as they will fulfill the majority of application requirements.

Parker LUCIFER® Valves

Valve Ref.	Housing Ref.	Coil Ref.
121K3206	2995	481865
121K3206	4270	481000
121K3206	4270	486265

However, in some specific cases, you will need special features that will lead you to choose another coil.

Groups have been created in order to facilitate the selection of a compatible coil with the chosen valve.

Coil Group
2.0
2.0
2.0

Example:
The valve 121K3206 is proposed with the coil 481865 but you can also choose any coil from the group 2.0.

2 WAY VALVES

2/2 VALVES FOR DRY OR LUBRICATED AIR, NEUTRAL GASES AND LIQUIDS
DIRECT OPERATED

BRASS
PIPE MOUNTING
NORMALLY CLOSED

Port size	Orifice Ø	Flow factors			Operating Pressure Differential			Fluid Temp.		Seat Seal	Parker LUCIFER® Valves			Power		Coil Group	Dwg. No.
					Min	Max(MOPD)		Min	Max		Valve Ref.	Housing Ref.	Coil Ref.				
BSP	mm	Kv	KV m³/h	Qn l/min	bar	AC bar	DC bar	°C	°C					AC W	DC W		
3/8"	4	7.5	0.45	[illegible]	0	10	4	-10	100	FKM	121K3206	2995	481865	8	9	2.0	3551
	4	7.5	0.45	480	0	10	5	-10	120	FKM	121K3206	4270	481000	8	8	2.0	3551
	4	7.5	0.45	480	0	10	10	-10	120	FKM	121K3206	4270	486265	14	14	2.0	3551
	5	11	0.66	750	0	7	2	-10	100	FKM	121K3106	2995	481865	8	9	2.0	3551
	5	11	0.66	750	0	7	2.8	-10	120	FKM	121K3106	4270	481000	8	8	2.0	3551
	5	11	0.66	750	0	7	5	-10	120	FKM	121K3106	4270	486265	14	14	2.0	3551
	6	12	0.72	1100	0	5	1.1	-10	100	FKM	121K3306	2995	481865	8	9	2.0/14.2	3551
	6	12	0.72	1100	0	5	1.5	-10	120	FKM	121K3306	4270	481000	8	8	2.0/14.2	3551
	6	12	0.72	1100	0	5	3	-10	120	FKM	121K3306	4270	486265	14	14	2.0/14.2	3551
1/2"	8.5	25	1.5	1600	0	1.1	0.5	-10	100	FKM	E121K46	2995	481865	8	9	2.0	3427
	8.5	25	1.5	1600	0	2.2	0.5	-10	120	FKM	E121K46	4270	481000	8	8	2.0	3427
	8.5	25	1.5	1600	0	4	1.2	-10	120	FKM	E121K46	4270	486265	14	14	2.0	3427
	11	36	2.16	2500	0	0.7	0.3	-10	100	FKM	E121K45	2995	481865	8	9	2.0	3427
	11	36	2.16	2500	0	1.2	0.35	[illegible]	120	FKM	E121K45	4270	481000	8	8	2.0	3427
	11	36	2.16	2500	0	2.5	0.7	-10	120	FKM	E121K45	4270	486265	14	14	2.0	3427

Notes:
1. Valve compatible with vac[illegible]y up to 40°C
2. With manual over[illegible]

Parker 36 Parker Hannifin Corporation Fluid Control Division Europe General Catalogue FCDE/0110/UK/V2.0

It is also possible to choose the coil first and then select the valve using coil groups.

HOW TO USE COIL GROUPS

WITHIN A COIL PAGE

The coil section is at the end of the catalogue and displays the specifications of each coil, along with the reference number, class of insulation, ambient temperature, electrical power and weight.

2.0 / 2.1

As indicated before, the valve 121K3206 is proposed with coil 481865 but is also compatible with the 2.0 coil group. This means the coil 482725 is also compatible with the chosen valve as it is within this group.

When refering to the coil section you will find the coil group for each coil. This allows you to discover which other coils are compatible with the valve you have chosen.

COILS

COIL GROUP

2.0/2.1 COILS FOR DIN PLUG CONNECTION

COILS 32 mm

These coils can be mounted with every Parker solenoid valves corresponding to the specified Coil Group.
See column "Coil Group" within valve pages.

This is an encapsulated assembly comprising a coil, integral magnetic iron path and snap-on plug connection.

The synthetic material encapsulation provides an effective compact housing, offering full protection against dust, oil, water, etc.
Ease of mounting in confined space - offers shock and corrosion protection - simplifies conversion of existing equipment to other requirements, etc.
Coils conform to the IEC/CENELEC safety standards and complies with European low-voltage directive.

Specification			Standard			Double frequency	
Ref. (without DIN plug) Ref. (with DIN plug)			481865 482725			483510 482635	
Coil Group			2.0 / 2.1				
Degree of protection			**IP65** according to IEC / EN 60529 standards (with DIN plug).				
Class of insulation			F 155°C				
Electrical connection			The coil is connected with a 2 P + E plug according to EN 175301-803 type A				
Ambient temperature			-40°C to +50°C The application is limited also by the temperature range of the valve.				
Elect. Power	DC	Pn (hot)	9 W			-	
		P (cold) 20°C	12 W			-	
	AC	Pn (holding)	8 W			9 W	
		Attraction cold	26 VA (9 W)			32 VA (10 W)	
Weight			130 g (without plug)				
Voltages "Un"			VAC/Hz	Code	VDC	Code	VAC/Hz	Code
-10% to +10% of the Un			24/50 48/50 110/50 220-230/50	A2 A4 A5 3D	24 48 110	C2 C4 C5	24/50, 24/60 48/50, 48/60 110-115/50, 120/60 220-240/50, 240/60	P0 S4 S5 S6

To Order a Coil choose Coil Ref + Voltage Code, example: 481865 for 24 VDC = **481865C2**
More voltage possibilities can be found in the table of voltage codes at the end of the coil section.

These coils must be used with suitable housings, see example below:

The coil assembly kit **Ref. 2995** corresponds to the "housing" of Lucifer® valve numbering system (Valve - housing - coil/voltage).

It is composed of a nameplate giving details of the valve type, a round washer and a nut to ensure the fixing between 32 mm coil and the valve.

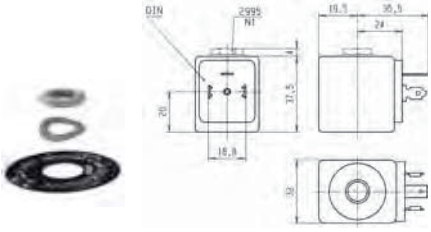

446

Parker Hannifin Corporation
Fluid Control Division Europe
General Catalogue FCDE/0110/UK/V2.0

VALVES FOR DRY OR LUBRICATED AIR, NEUTRAL GASES AND LIQUIDS

Oil Water Air

2/2

Actuation	Body	Function	Port Size	Orifice (mm)	Flow Factor Kv(l/min)	MOPD (bar)	Max Fluid Temp. (°C)	Page Parker Valves	Page Parker LUCIFER® Valves
Direct Operated	Brass/Pipe mounting	Normally Closed	1/8''	1.2 to 3	4.5	70	140	28	32
			1/4''	1.2 to 5	13	100	140	30	32
			3/8''	4 to 6	12	10	120	-	36
			1/2''	8.5 to 11	36	4	120	-	36
		Normally Open	1/8''	2.5	3.5	30	140	-	40
			1/4''	1.5 to 3	4	40	140	38	40
		Control by Electric Impulse	1/4''	3 to 5	11	20	100	-	40
	Brass/Sub-base mounting	Normally Closed	5 mm	1.5 to 3	4.5	100	130	-	42
		Normally Open	5 mm	1.5	1.5	20	120	-	44
Magnalift	Brass/Pipe mounting	Normally Closed	3/8''	13 to 15	65	20	140	46	48
			1/2''	13 to 15	65	20	140	46	48
			3/4''	15 to 20	100	20	140	46	50
			1''	15 to 25	170	20	140	46	52
Pilot Operated	Brass/Pipe mounting	Normally Closed	1/4''	8 to 12	36	40	120	-	56
			3/8''	11 to 13	50	40	120	54	58
			1/2''	11 to 15	60	40	120	54	60
			3/4''	15 to 20	135	40	120	54	62
			1''	18 to 28	270	16	120	54	64
			1 1/2''	40	425	16	120	-	66
			2''	40	540	16	120	-	66
		Normally Open	1/4''	8	36	40	140	-	70
			3/8''	11 to 13	50	40	140	68	70
			1/2''	13 to 15	60	40	140	68	70
			3/4''	15 to 20	135	40	120	68	72
			1''	25 to 40	420	16	120	68	72
			1 1/4''	28	270	16	120	-	72
			1 1/2''	40	420	12	100	-	72
			2''	40	540	12	120	-	72
		Control by Electric Impulse	1/4''	12	32	12	100	-	74
			3/8''	12	45	12	100	-	74
			1/2''	12	50	12	100	-	74
			3/4''	18	100	12	100	-	74
			1''	18	110	12	100	-	74
	Brass/Sub-base mounting	Normally Closed	14 mm	14	45	40	140	-	76
		Normally Open	14 mm	14	46	40	120	-	76

2/2 VALVES FOR DRY OR LUBRICATED AIR, NEUTRAL GASES AND LIQUIDS

DIRECT OPERATED

Commercial Equipment

Industrial Equipment

Heating Systems

BRASS
PIPE MOUNTING
NORMALLY CLOSED

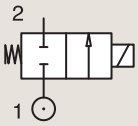

Port size	Orifice Ø	Flow factors			Operating Pressure Differential Max(MOPD)			Fluid Temp.		Seat Seal	Parker Valves			Power		Coil Group	Dwg. No.
					Min			Min	Max		Valve Order Number	Valve Type	Coil Type				
BSP	mm	Kv l/min	KV m³/h	Qn m³/h	bar	AC bar	DC bar	°C	°C					AC W	DC W		
1/8"	1.2	0.7	0.04	-	0	20	-	-10	140	FKM	398018 [1]	N74.4IV	WB4.5 115/50-60	4.5	-	1.3	064
	1.5	1	0.06	-	0	20	-	-10	140	FKM	398017 [1]	N74.4AV	WB4.5 115/50-60	4.5	-	1.3	064
	1.5	1	0.06	-	0	20	-	-10	140	FKM	398014 [1]	N74.4AV	WB4.5 230/50-60	4.5	-	1.3	064
	1.5	1	0.06	-	0	20	-	-10	140	FKM	398030 [1]	N74.4AV	WB4.5 24/50-60	4.5	-	1.3	064
	1.5	1	0.06	-	0	-	10	-10	140	FKM	398034 [1]	N74.4AV	WB5.0 12DC	-	5	1.3	064
	1.5	1	0.06	-	0	-	10	-10	140	FKM	398016 [1]	N74.4AV	WB5.0 24DC	-	5	1.3	064
	1.5	1	0.06	-	0	-	10	-10	140	FKM	398013 [1]	N74.4AVA.5	WB5.0 5.0 24DC	-	5	1.3	064
	1.5	1.5	0.09	-	0	20	-	-10	140	FKM	363378	PM146BV	ZB09	9	-	20.1/20.2	034
	1.5	1.5	0.09	-	0	-	18	-10	140	FKM	363378	PM146BV	ZB12	-	12	20.1/20.2	034
	2.5	2.2	0.13	-	0	10	-	-10	140	FKM	398026 [1]	N74.4FV	WB4.5 115/50-60	4.5	-	1.3	064
	2.5	2.2	0.13	-	0	10	-	-10	140	FKM	398003 [1]	N74.4FV	WB4.5 115/60	4.5	-	1.3	064
	2.5	2.2	0.13	-	0	10	-	-10	140	FKM	398000 [1]	N74.4FV	WB4.5 230/50-60	4.5	-	1.3	064
	2.5	2.2	0.13	-	0	10	-	-10	140	FKM	398024 [1]	N74.4FV	WB4.5 24/50-60	4.5	-	1.3	064
	2.5	2.2	0.13	-	0	10	-	-10	140	FKM	398001 [1]	N74.4FV	WB4.5 240/50-60	4.5	-	1.3	064
	2.5	2.2	0.13	-	0	-	4	-10	140	FKM	398052 [1]	N74.4FV	WB5.0 12DC	-	5	1.3	064
	2.5	2.2	0.13	-	0	-	4	-10	140	FKM	398022 [1]	N74.4FV	WB5.0 24DC	-	5	1.3	064
	2.5	3.3	0.20	-	0	10	-	-10	140	FKM	363380	PM146FV	ZB09	9	-	20.1/20.2	034

Notes:

1. Ordering number is for an assembled valve and coil, with the voltage shown.

For this page	Port size	Orifice (mm)	Kv (l/min)	MOPD (bar)	Fluid Temp (°C)	Amb Temp (°C)
From	1/8''	1.2	0.7	4	-10	-10
To	1/8''	2.5	3.3	20	140	50

Drawing 064

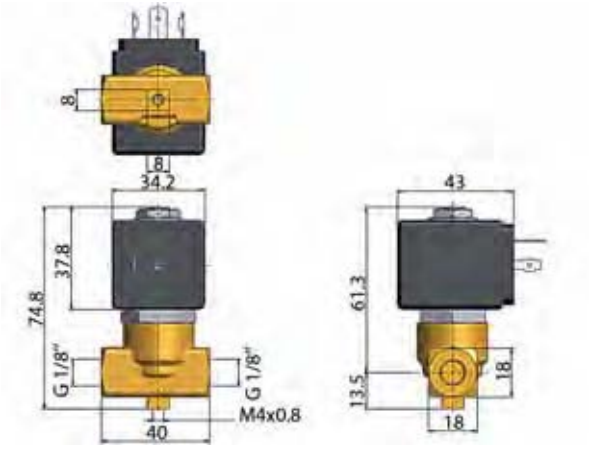

Drawing 034

2/2 VALVES FOR DRY OR LUBRICATED AIR, NEUTRAL GASES AND LIQUIDS

DIRECT OPERATED

BRASS

PIPE MOUNTING

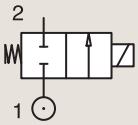

NORMALLY CLOSED

Port size	Orifice Ø	Flow factors			Operating Pressure Differential			Fluid Temp.		Seat Seal	Parker Valves			Power		Coil Group	Dwg. No.
					Min	Max(MOPD)		Min	Max		Valve Order Number	Valve Type	Coil Type				
BSP	mm	Kv l/min	KV m³/h	Qn m³/h	bar	AC bar	DC bar	°C	°C					AC W	DC W		
1/8"	2.5	3.3	0.20	-	0	-	5	-10	140	FKM	**363380**	**PM146FV**	**ZB12**	-	12	20.1/20.2	034
	3	4.5	0.27	-	0	7	-	-10	140	FKM	**363390**	**PM146HV**	**ZB09**	9	-	20.1/20.2	034
	3	4.5	0.27	-	0	-	2	-10	140	FKM	**363390**	**PM146HV**	**ZB12**	-	12	20.1/20.2	034
1/4"	2.5	2.2	0.13	-	0	10	-	-10	140	FKM	**398006**[1]	**N74.4WV**	**WB4.5** 230/50-60	4.5	-	1.3	065
	2.5	2.2	0.13	-	0	10	-	-10	140	FKM	**398007**[1]	**N74.4WV**	**WB4.5** 24/50-60	4.5	-	1.3	065
	2.5	2.2	0.13	-	0	-	4	-10	140	FKM	**398008**[1]	**N74.4WV**	**WB5.0** 12DC	-	5	1.3	065
	2.5	2.2	0.13	-	0	-	4	-10	140	FKM	**398010**[1]	**N74.4WV**	**WB5.0** 24DC	-	5	1.3	065
	2.5	2.2	0.13	-	0	19	-	-10	140	FKM	**398012**[1]	**N74.4WV**	**WB8.0** 230/50-60	8	-	1.3	065
	3	4.5	0.27	-	0	7	-	-10	140	FKM	**363444**	**PM146YV**	**ZB09**	9	-	20.1/20.2	035
	3	4.5	0.27	-	0	-	2	-10	140	FKM	**363444**	**PM146YV**	**ZB12**	-	12	20.1/20.2	035
	4.5	9	0.53	-	0	6	-	-10	140	FKM	**363457**	**PM146.3KV**	**ZB14**	14	-	20.2	035
	4.5	9	0.53	-	0	-	2.5	-10	140	FKM	**363457**	**PM146.3KV**	**ZB16**	-	16	20.2	035
	6	13	0.75	-	0	6	-	-10	140	FKM	**363467**	**PM146.3ABV**	**ZB14**	14	-	20.2	035
	6	13	0.75	-	0	-	1	-10	140	FKM	**363467**	**PM146.3ABV**	**ZB16**	-	16	20.2	035

Notes:

1. Ordering number is for an assembled valve and coil, with the voltage shown.

For this page	Port size	Orifice (mm)	Kv (l/min)	MOPD (bar)	Fluid Temp (°C)	Amb Temp (°C)
From	1/8''	2.5	2.2	1	-10	-10
To	1/4''	6	13	19	140	50

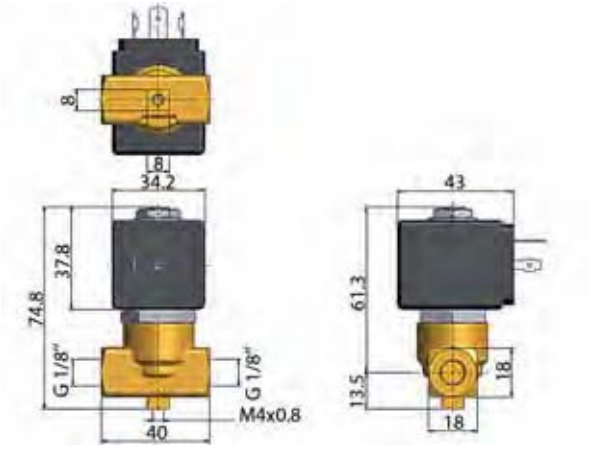

Drawing 034

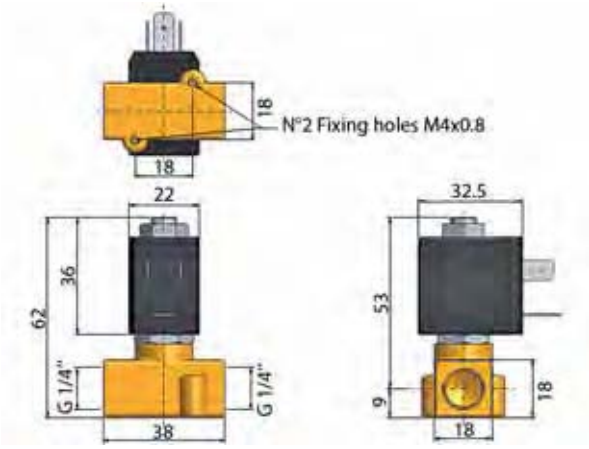

Drawing 065

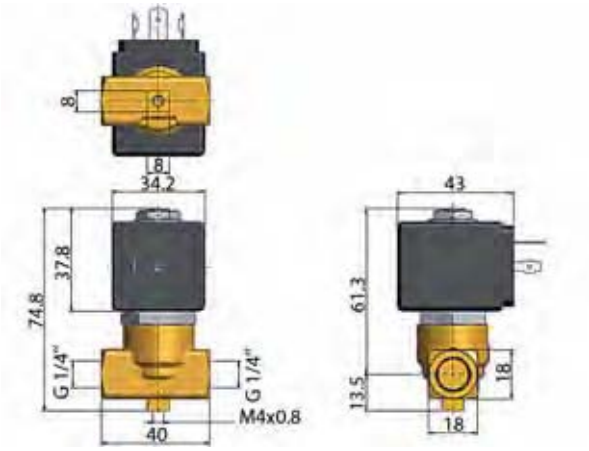

Drawing 035

2/2 VALVES FOR DRY OR LUBRICATED AIR, NEUTRAL GASES AND LIQUIDS

DIRECT OPERATED

BRASS

PIPE MOUNTING

NORMALLY CLOSED

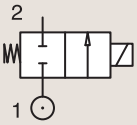

Port size	Orifice Ø	Flow factors			Operating Pressure Differential			Fluid Temp.		Seat Seal	Parker LUCIFER® Valves			IS	Power		Coil Group	Dwg. No.
					Min	Max(MOPD)		Min	Max									
BSP	mm	Kv l/min	KV m³/h	Qn l/min	bar	AC bar	DC bar	°C	°C		Valve Ref.	Housing Ref.	Coil Ref.		AC W	DC W		
1/8"	1.5	0.9	0.05	70	0	20	12	-10	75	FKM	**121M14**	**8993**	**481180**		4	5	1.1	3382
	1.5	0.9	0.05	70	0	20	4	-10	75	FKM	**121M14**	**8993**	**488980**		2	2.5	1.1	3382
	1.5	1.5	0.09	80	0	60	25	-30	75	PCTFE	**E121K14**	**2995**	**481865**		8	9	2.0	3510
	1.5	1.5	0.09	80	0	70	30	-30	75	PCTFE	**E121K14**	**4270**	**481000**		8	8	2.0	3510
	1.5	1.5	0.09	80	0	70	55	-30	75	PCTFE	**E121K14**	**4270**	**486265**		14	14	2.0	3510
	2	2	0.12	125	0	10	7	-10	75	FKM	**121M13**	**8993**	**481180**		4	5	1.1	3382
	2	2	0.12	125	0	10	2.5	-10	75	FKM	**121M13**	**8993**	**488980**		2	2.5	1.1	3382
	2.5	3.5	0.21	220	0	28	10	-30	100	Ruby	**E121K23**	**2995**	**481865**		8	9	2.0	3510
	2.5	3.5	0.21	220	0	34	12	-30	130	Ruby	**E121K23**	**4270**	**481000**		8	8	2.0	3510
	2.5	3.5	0.21	220	0	50	22	-30	120	Ruby	**E121K23**	**4270**	**486265**		14	14	2.0	3510
	3	4.5	0.27	320	0	10	7	-10	100	FKM	**121K1302**	**2995**	**481865**		8	9	2.0	3510
	3	4.5	0.27	320	0	10	8	-10	120	FKM	**121K1302**	**4270**	**481000**		8	8	2.0	3510
	3	4.5	0.27	320	0	10	10	-10	120	FKM	**121K1302**	**4270**	**486265**		14	14	2.0	3510
1/4"	1.2	0.85	0.05	50	0	80	36	-30	100	Ruby	**E121K65**	**2995**	**481865**		8	9	2.0	3510
	1.2	0.85	0.05	50	0	100	43	-30	130	Ruby	**E121K65**	**4270**	**481000**		8	8	2.0	3510
	1.2	0.85	0.05	50	0	100	75	-30	120	Ruby	**E121K65**	**4270**	**486265**		14	14	2.0	3510
	1.5	1.5	0.09	80	0	-	8	-20	75	PUR	**121K0497** [1]	**2995**	**482740**		-	1.6	6.0/8.0	8274
	1.5	1.5	0.09	80	0	10	10	-20	75	PUR	**121K0497** [1]	**-**	**495900**		2.5	2	6.0/8.0	8274
	1.5	1.5	0.09	80	0	-	10	-20	75	PUR	**121K0497** [1]	**-**	**495910**	*	-	0.3 to 3	6.0/8.0	8274
	1.5	1.5	0.09	80	0	-	8	-20	75	PUR	**121K0497** [1]	**2995**	**496125**		-	1.6	6.0/8.0	8274
	1.5	1.5	0.09	80	0	60	25	-30	75	PCTFE	**E121K04**	**2995**	**481865**		8	9	2.0	3510
	1.5	1.5	0.09	80	0	70	30	-30	75	PCTFE	**E121K04**	**4270**	**481000**		8	8	2.0	3510
	1.5	1.5	0.09	80	0	70	55	-30	75	PCTFE	**E121K04**	**4270**	**486265**		14	14	2.0	3510
	1.5	1.5	0.09	80	0	20	20	-10	100	FKM	**E121K0402**	**2995**	**481865**		8	9	2.0/3.0	3510
	1.5	1.5	0.09	80	0	20	20	-10	120	FKM	**E121K0402**	**4270**	**481000**		8	8	2.0/3.0	3510
	1.5	1.5	0.09	80	0	60	25	-30	100	Ruby	**E121K67**	**2995**	**481865**		8	9	2.0	3510
	1.5	1.5	0.09	80	0	75	30	-30	130	Ruby	**E121K67**	**4270**	**481000**		8	8	2.0	3510
	1.5	1.5	0.09	80	0	100	55	-30	120	Ruby	**E121K67**	**4270**	**486265**		14	14	2.0	3510
	2.5	3.5	0.21	220	0	14	7	-10	100	FKM	**121K0706**	**2995**	**481865**		8	9	2.0	3510
	2.5	3.5	0.21	220	0	14	9	-10	120	FKM	**121K0706**	**4270**	**481000**		8	8	2.0	3510
	2.5	3.5	0.21	220	0	14	14	-10	120	FKM	**121K0706**	**4270**	**486265**		14	14	2.0	3510
	2.5	3.5	0.21	220	0	28	10	-30	75	PCTFE	**E121K07**	**2995**	**481865**		8	9	2.0	3510
	2.5	3.5	0.21	220	0	34	12	-30	75	PCTFE	**E121K07**	**4270**	**481000**		8	8	2.0	3510
	2.5	3.5	0.21	220	0	50	22	-30	75	PCTFE	**E121K07**	**4270**	**486265**		14	14	2.0	3510

Notes:

1. Valve compatible with water only up to 40°C

For this page	Port size	Orifice (mm)	Kv (l/min)	MOPD (bar)	Fluid Temp (°C)	Amb Temp (°C)
From	1/8"	1.2	0.9	2.5	-30	-20
To	1/4"	3	4.5	100	130	50

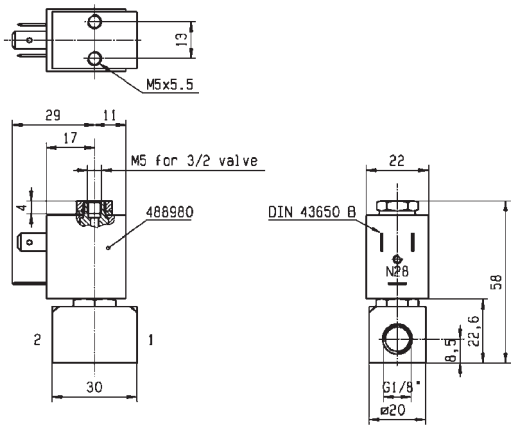

Drawing 3382

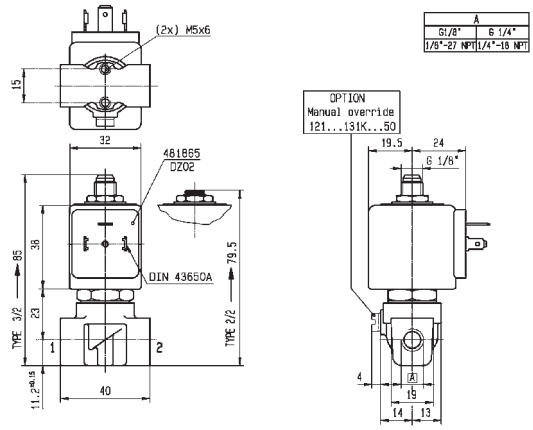

Drawing 3510

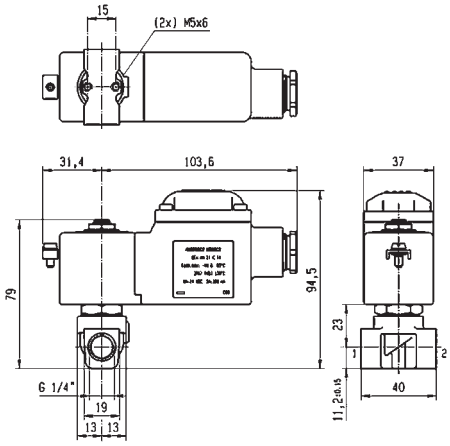

Drawing 8274

2/2 VALVES FOR DRY OR LUBRICATED AIR, NEUTRAL GASES AND LIQUIDS

DIRECT OPERATED

BRASS

PIPE MOUNTING

NORMALLY CLOSED

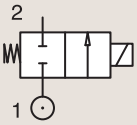

Port size	Orifice Ø	Flow factors			Operating Pressure Differential			Fluid Temp.		Seat Seal	Parker LUCIFER® Valves			IS	Power		Coil Group	Dwg. No.
					Min	Max(MOPD)		Min	Max									
BSP	mm	Kv l/min	KV m³/h	Qn l/min	bar	AC bar	DC bar	°C	°C		Valve Ref.	Housing Ref.	Coil Ref.		AC W	DC W		
	2.5	3.5	0.21	220	0	28	10	-30	100	Ruby	E121K63	2995	481865		8	9	2.0	3510
	2.5	3.5	0.21	220	0	34	12	-30	130	Ruby	E121K63	4270	481000		8	8	2.0	3510
	2.5	3.5	0.21	220	0	50	22	-30	120	Ruby	E121K63	4270	486265		14	14	2.0	3510
	3	3.5	0.21	250	0	-	2	-20	75	PUR	121K0397 [1]	2995	482740		-	1.6	6.0/8.0	8074
	3	3.5	0.21	250	0	4.5	4	-20	75	PUR	121K0397 [1]	-	495900		2.5	2	6.0/8.0	8074
	3	3.5	0.21	250	0	-	4.5	-20	75	PUR	121K0397 [1]	-	495910	*	-	0.3 to 3	6.0/8.0	8074
	3	3.5	0.21	250	0	-	2	-20	75	PUR	121K0397 [1]	2995	496125		-	1.6	6.0/8.0	8274
	3	4.5	0.27	320	0	20	7	-30	75	PCTFE	E121K03	2995	481865		8	9	2.0/3.0	3510
	3	4.5	0.27	320	0	25	8.5	-30	75	PCTFE	E121K03	4270	481000		8	8	2.0/3.0	3510
	3	4.5	0.27	320	0	36	15	-30	75	PCTFE	E121K03	4270	486265		14	14	2.0/3.0	3510
	3	4.5	0.27	320	0	10	7	-10	100	FKM	E121K0302	2995	481865		8	9	2.0	3510
	3	4.5	0.27	320	0	10	8.5	-10	120	FKM	E121K0302	4270	481000		8	8	2.0	3510
	3	4.5	0.27	320	0	10	7	-10	100	FKM	E121K0302	4270	486265		14	14	2.0	3510
	3	4.5	0.27	320	0	10	7	-10	100	FKM	E121K0352 [2]	2995	481865		8	9	2.0	3510
	3	4.5	0.27	320	0	10	8.5	-10	120	FKM	E121K0352 [2]	4270	481000		8	8	2.0	3510
	3	4.5	0.27	320	0	10	10	-10	120	FKM	E121K0352 [2]	4270	486265		14	14	2.0	3510
1/4"	3	4.5	0.27	320	0	20	7	-30	100	Ruby	E121K64	2995	481865		8	9	2.0	3510
	3	4.5	0.27	320	0	25	8.5	-30	130	Ruby	E121K64	4270	481000		8	8	2.0	3510
	3	4.5	0.27	320	0	36	15	-30	120	Ruby	E121K64	4270	486265		14	14	2.0	3510
	4	7.5	0.45	480	0	10	4	-10	100	FKM	121K02	2995	481865		8	9	2.0	3510
	4	7.5	0.45	480	0	10	5	-10	120	FKM	121K02	4270	481000		8	8	2.0	3510
	4	7.5	0.45	480	0	10	10	-10	120	FKM	121K02	4270	486265		14	14	2.0	3510
	4	7.5	0.45	480	0	10	4	-10	100	FKM	121K0250 [2]	2995	481865		8	9	2.0	3510
	4	7.5	0.45	480	0	10	5	-10	120	FKM	121K0250 [2]	4270	481000		8	8	2.0	3510
	4	7.5	0.45	480	0	10	10	-10	120	FKM	121K0250 [2]	4270	486265		14	14	2.0	3510
	5	11	0.66	750	0	7	2	-10	100	FKM	121K01	2995	481865		8	9	2.0/14.2	3510
	5	11	0.66	750	0	7	2.8	-10	120	FKM	121K01	4270	481000		8	8	2.0/14.2	3510
	5	11	0.66	750	0	7	5	-10	120	FKM	121K01	4270	486265		14	14	2.0/14.2	3510
	5	11	0.66	750	0	7	2	-10	100	FKM	121K0106	2995	481865		8	9	2.0	3510
	5	11	0.66	750	0	7	2.8	-10	120	FKM	121K0106	4270	481000		8	8	2.0	3510
	5	11	0.66	750	0	7	5	-10	120	FKM	121K0106	4270	486265		14	14	2.0	3510
	5	11	0.66	750	0	7	2	-10	100	FKM	121K0150 [2]	2995	481865		8	9	2.0	3510
	5	11	0.66	750	0	7	2.8	-10	120	FKM	121K0150 [2]	4270	481000		8	8	2.0	3510
	5	11	0.66	750	0	7	5	-10	120	FKM	121K0150 [2]	4270	486265		14	14	2.0	3510

Notes:

1. Valve compatible with water only up to 40°C
2. With manual override

For this page	Port size	Orifice (mm)	Kv (l/min)	MOPD (bar)	Fluid Temp (°C)	Amb Temp (°C)
From	1/4"	2.5	3.5	2	-30	-20
To	1/4"	5	11	50	130	50

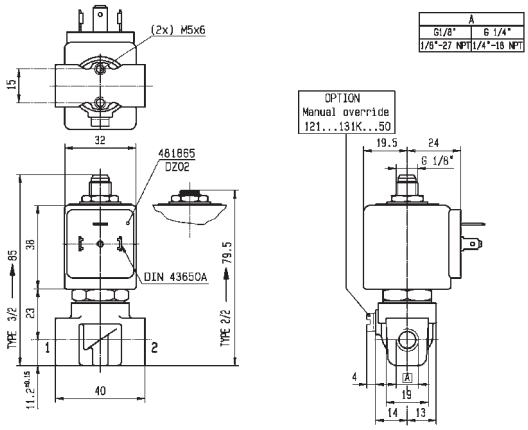

Drawing 3510

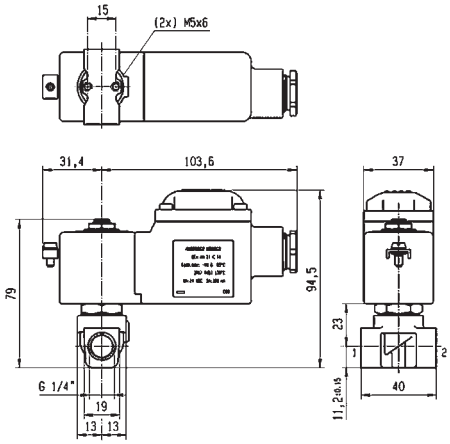

Drawing 8274

2/2 VALVES FOR DRY OR LUBRICATED AIR, NEUTRAL GASES AND LIQUIDS

DIRECT OPERATED

BRASS

PIPE MOUNTING

NORMALLY CLOSED

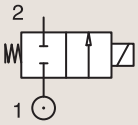

Port size	Orifice Ø	Flow factors			Operating Pressure Differential			Fluid Temp.		Seat Seal	Parker LUCIFER® Valves			Power		Coil Group	Dwg. No.
					Min	Max(MOPD)		Min	Max								
BSP	mm	Kv l/min	KV m³/h	Qn l/min	bar	AC bar	DC bar	°C	°C		Valve Ref.	Housing Ref.	Coil Ref.	AC W	DC W		
3/8"	4	7.5	0.45	480	0	10	4	-10	100	FKM	**121K3206**	**2995**	**481865**	8	9	2.0	3551
	4	7.5	0.45	480	0	10	5	-10	120	FKM	**121K3206**	**4270**	**481000**	8	8	2.0	3551
	4	7.5	0.45	480	0	10	10	-10	120	FKM	**121K3206**	**4270**	**486265**	14	14	2.0	3551
	5	11	0.66	750	0	7	2	-10	100	FKM	**121K3106**	**2995**	**481865**	8	9	2.0	3551
	5	11	0.66	750	0	7	2.8	-10	120	FKM	**121K3106**	**4270**	**481000**	8	8	2.0	3551
	5	11	0.66	750	0	7	5	-10	120	FKM	**121K3106**	**4270**	**486265**	14	14	2.0	3551
	6	12	0.72	1100	0	5	1.1	-10	100	FKM	**121K3306**	**2995**	**481865**	8	9	2.0/14.2	3551
	6	12	0.72	1100	0	5	1.5	-10	120	FKM	**121K3306**	**4270**	**481000**	8	8	2.0/14.2	3551
	6	12	0.72	1100	0	5	3	-10	120	FKM	**121K3306**	**4270**	**486265**	14	14	2.0/14.2	3551
1/2"	8.5	25	1.5	1600	0	1.1	0.5	-10	100	FKM	**E121K46**	**2995**	**481865**	8	9	2.0	3427
	8.5	25	1.5	1600	0	2.2	0.5	-10	120	FKM	**E121K46**	**4270**	**481000**	8	8	2.0	3427
	8.5	25	1.5	1600	0	4	1.2	-10	120	FKM	**E121K46**	**4270**	**486265**	14	14	2.0	3427
	11	36	2.16	2500	0	0.7	0.3	-10	100	FKM	**E121K45**	**2995**	**481865**	8	9	2.0	3427
	11	36	2.16	2500	0	1.2	0.35	-10	120	FKM	**E121K45**	**4270**	**481000**	8	8	2.0	3427
	11	36	2.16	2500	0	2.5	0.7	-10	120	FKM	**E121K45**	**4270**	**486265**	14	14	2.0	3427

For this page	Port size	Orifice (mm)	Kv (l/min)	MOPD (bar)	Fluid Temp (°C)	Amb Temp (°C)
From	3/8"	4	7.5	0.3	-10	-10
To	1/2"	11	36	10	120	50

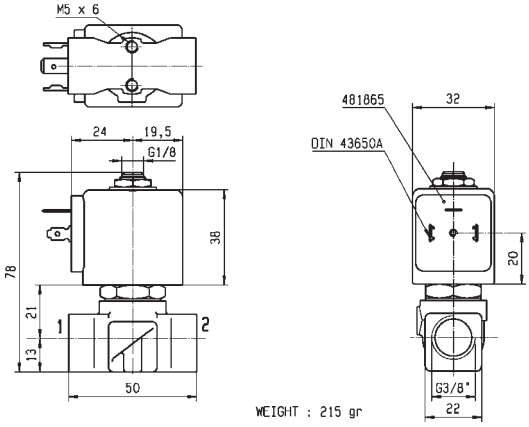

Drawing 3551

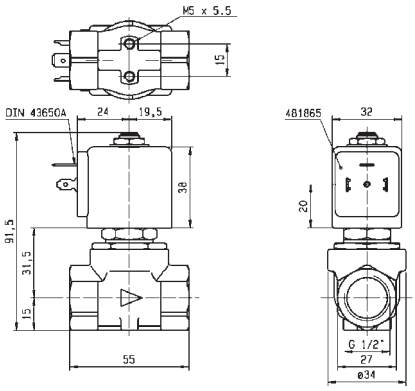

Drawing 3427

2/2 VALVES FOR DRY OR LUBRICATED AIR, NEUTRAL GASES AND LIQUIDS

DIRECT OPERATED

BRASS

PIPE MOUNTING

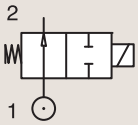

NORMALLY OPEN

Port size	Orifice Ø	Flow factors			Operating Pressure Differential			Fluid Temp.		Seat Seal	Parker Valves			Power		Coil Group	Dwg. No.
					Min	Max(MOPD)		Min	Max		Valve Order Number	Valve Type	Coil Type				
BSP	mm	Kv l/min	KV m³/h	Qn m³/h	bar	AC bar	DC bar	°C	°C					AC W	DC W		
1/4"	1.5	1.3	0.08	-	0	22	-	-10	140	FKM	**363745**	**PM151GV**	**ZB09**	9	-	20.1/20.2	036
	1.5	1.3	0.08	-	0	-	22	-10	140	FKM	**363745**	**PM151GV**	**ZB12**	-	12	20.1/20.2	036
	2	1.8	0.11	-	0	18	-	-10	140	FKM	**362290**	**PM136.2FV**	**ZB14**	14	-	20.2	020
	2	1.8	0.11	-	0	-	18	-10	140	FKM	**362290**	**PM136.2FV**	**ZB16**	-	16	20.2	020
	2	2.5	0.15	-	0	12	-	-10	140	FKM	**363570**	**PM151HV**	**ZB09**	9	-	20.1/20.2	036
	2	2.5	0.15	-	0	-	12	-10	140	FKM	**363570**	**PM151HV**	**ZB12**	-	12	20.1/20.2	036
	3	4	0.24	-	0	5.5	-	-10	140	FKM	**362286**	**PM136YV**	**ZB14**	14	-	20.2	020
	3	4	0.24	-	0	-	5.5	-10	140	FKM	**362286**	**PM136YV**	**ZB16**	-	16	20.2	020

For this page	Port size	Orifice (mm)	Kv (l/min)	MOPD (bar)	Fluid Temp (°C)	Amb Temp (°C)
From	1/4"	1.5	1.3	5.5	-10	-10
To	1/4"	3	4	22	140	50

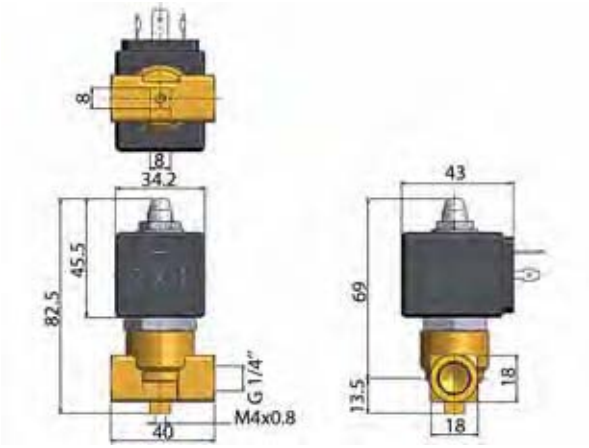

Drawing 036

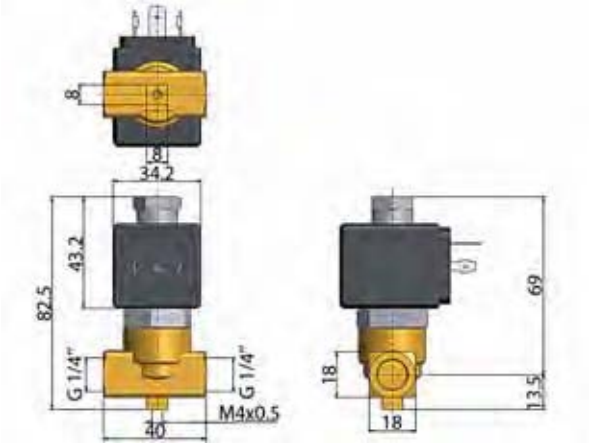

Drawing 020

2/2 VALVES FOR DRY OR LUBRICATED AIR, NEUTRAL GASES AND LIQUIDS

DIRECT OPERATED

BRASS PIPE MOUNTING

NORMALLY OPEN

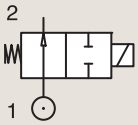

Port size	Orifice Ø	Flow factors			Operating Pressure Differential			Fluid Temp.		Seat Seal	Parker LUCIFER® Valves			Power		Coil Group	Dwg. No.
					Min	Max(MOPD)		Min	Max								
BSP	mm	Kv l/min	KV m³/h	Qn l/min	bar	AC bar	DC bar	°C	°C		Valve Ref.	Housing Ref.	Coil Ref.	AC W	DC W		
1/8"	2.5	3.5	0.21	-	0	30	-	-30	140	Ruby	122K9363	4270	481044	14	-	2.2	3510
	2.5	3.5	0.21	-	0	30	30	-30	140	Ruby	122K9363	4270	486265	14	14	2.2	3510
1/4"	1.5	1.5	0.09	9.6	0	30	30	-10	100	PCTFE	122K84	2995	481865	8	9	2.0	3510
	1.5	1.5	0.09	9.6	0	30	30	-10	100	PCTFE	122K84	4270	481000	8	8	2.0	3510
	1.5	1.5	0.09	9.6	0	30	30	-10	120	PCTFE	122K84	4270	486265	14	14	2.0	3510
	1.5	1.5	0.09	80	0	20	20	-10	100	FKM	122K8406	2995	481865	8	9	2.1	3510
	1.5	1.5	0.09	80	0	20	20	-10	120	FKM	122K8406	4270	481000	8	8	2.1	3510
	1.5	1.5	0.09	80	0	40	40	-30	100	Ruby	122K8408	2995	481865	8	9	2.1	3510
	1.5	1.5	0.09	80	0	40	40	-30	130	Ruby	122K8408	4270	481000	8	8	2.1	3510
	1.5	1.5	0.09	80	0	40	40	-30	130	Ruby	122K8408	4270	486265	14	14	2.0	3510
	2.5	3	0.18	180	0	12	12	-30	75	PCTFE	122K83	2995	481865	8	9	2.1	3510
	2.5	3	0.18	180	0	12	12	-30	75	PCTFE	122K83	4270	481000	8	8	2.1	3510
	2.5	3	0.18	180	0	12	12	-30	75	PCTFE	122K83	4270	486265	14	14	2.0	3510
	2.5	3	0.18	180	0	12	12	-10	100	FKM	122K8306	2995	481865	8	9	2.0	3510
	2.5	3	0.18	180	0	12	12	-10	120	FKM	122K8306	4270	481000	8	8	2.0	3510
	2.5	3	0.18	180	0	12	12	-10	120	FKM	122K8306	4270	486265	14	14	2.0	3510
	2.5	3.5	0.21	-	0	30	-	-30	140	Ruby	122K8363	4270	481044	14	-	2.2	3510
	2.5	3.5	0.21	-	0	30	30	-30	140	Ruby	122K8363	4270	486265	14	14	2.2	3510

BRASS PIPE MOUNTING

CONTROL BY ELECTRIC IMPULSE

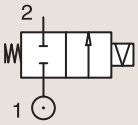

Port size	Orifice Ø	Flow factors			Operating Pressure Differential			Fluid Temp.		Seat Seal	Parker LUCIFER® Valves			Power		Coil Group	Dwg. No.
					Min	Max(MOPD)		Min	Max								
BSP	mm	Kv l/min	KV m³/h	Qn l/min	bar	AC bar	DC bar	°C	°C		Valve Ref.	Housing Ref.	Coil Ref.	AC W	DC W		
1/4"	3	4.5	0.27	320	0	20	-	-30	75	PCTFE	125K03	4269	484990	11	-	4.0	8296
	3	4.5	0.27	320	0	-	7	-30	75	PCTFE	125K03	4269	485400	-	13	4.0	8296
	5	11	0.66	750	0	5	-	-10	100	FKM	125K01	4269	484990	11	-	4.0	8296
	5	11	0.66	750	0	-	1.5	-10	100	FKM	125K01	4269	485400	-	13	4.0	8296

For this page	Port size	Orifice (mm)	Kv (l/min)	MOPD (bar)	Fluid Temp (°C)	Amb Temp (°C)
From	1/8"	1.5	1.5	1.5	-30	-10
To	1/4"	5	11	40	140	50

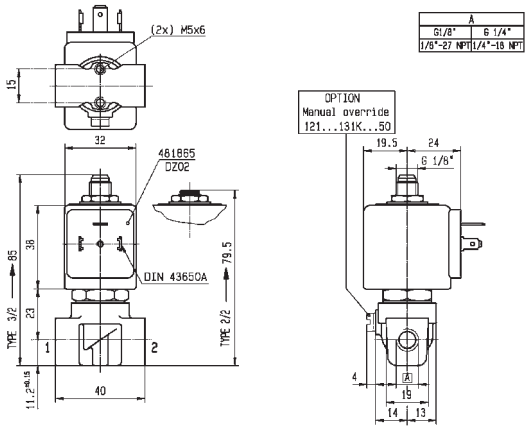

Drawing 3510

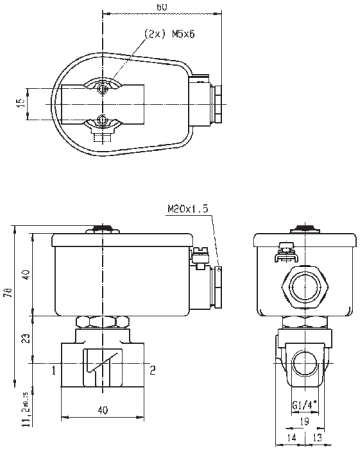

Drawing 8296

2/2 VALVES FOR DRY OR LUBRICATED AIR, NEUTRAL GASES AND LIQUIDS

DIRECT OPERATED

BRASS

SUB-BASE MOUNTING

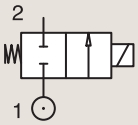

NORMALLY CLOSED

Port size	Orifice Ø	Flow factors			Operating Pressure Differential			Fluid Temp.		Seat Seal	Parker LUCIFER® Valves			Power		Coil Group	Dwg. No.
					Min	Max(MOPD)		Min	Max		Valve Ref.	Housing Ref.	Coil Ref.				
	mm	Kv l/min	KV m³/h	Qn l/min	bar	AC bar	DC bar	°C	°C					AC W	DC W		
SB	1.5	1.5	0.09	80	0	20	-	-10	100	EPDM	**121F4417**	**2995**	**483510**	9	-	2.0	3509
	1.5	1.5	0.09	80	0	60	25	-30	100	Ruby	**121F67**	**2995**	**481865**	8	9	2.0	3509
	1.5	1.5	0.09	80	0	75	30	-30	130	Ruby	**121F67**	**4270**	**481000**	8	8	2.0	3509
	1.5	1.5	0.09	80	0	100	55	-30	120	Ruby	**121F67**	**4270**	**486265**	14	14	2.0	3509
	1.5	1.5	0.09	80	0	60	25	-30	75	PCTFE	**E121F44**	**2995**	**481865**	8	9	2.0	3509
	1.5	1.5	0.09	80	0	70	30	-30	75	PCTFE	**E121F44**	**4270**	**481000**	8	8	2.0	3509
	1.5	1.5	0.09	80	0	70	55	-30	75	PCTFE	**E121F44**	**4270**	**486265**	14	14	2.0	3509
	1.5	1.5	0.09	80	0	20	20	-10	100	FKM	**E121F4406**	**2995**	**481865**	8	9	2.0	3509
	1.5	1.5	0.09	80	0	20	20	-10	120	FKM	**E121F4406**	**4270**	**481000**	8	8	2.0	3509
	1.5	1.5	0.09	80	0	20	20	-10	120	FKM	**E121F4406**	**4270**	**486265**	14	14	2.0	3509
	2.5	3.5	0.21	220	0	28	10	-30	75	PCTFE	**121F47**	**2995**	**481865**	8	9	2.0	3509
	2.5	3.5	0.21	220	0	34	12	-30	75	PCTFE	**121F47**	**4270**	**481000**	8	8	2.0	3509
	2.5	3.5	0.21	220	0	50	22	-30	75	PCTFE	**121F47**	**4270**	**486265**	14	14	2.0	3509
	2.5	3.5	0.21	220	0	14	7	-10	100	FKM	**121F4706**	**2995**	**481865**	8	9	2.0	3509
	2.5	3.5	0.21	220	0	14	9	-10	120	FKM	**121F4706**	**4270**	**481000**	8	8	2.0	3509
	2.5	3.5	0.21	220	0	14	14	-10	120	FKM	**121F4706**	**4270**	**486265**	14	14	2.0	3509
	2.5	3.5	0.21	220	0	28	10	-30	100	Ruby	**121F63**	**2995**	**481865**	8	9	2.0	3509
	2.5	3.5	0.21	220	0	34	12	-30	130	Ruby	**121F63**	**4270**	**481000**	8	8	2.0	3509
	2.5	3.5	0.21	220	0	50	22	-30	120	Ruby	**121F63**	**4270**	**486265**	14	14	2.0	3509
	3	4.5	0.27	320	0	10	-	-10	100	FKM	**121F4317**	**2995**	**483510**	9	-	2.0	3509
	3	4.5	0.27	320	0	20	7	-30	100	Ruby	**121F64**	**2995**	**481865**	8	9	2.0	3509
	3	4.5	0.27	320	0	25	8.5	-30	130	Ruby	**121F64**	**4270**	**481000**	8	8	2.0	3509
	3	4.5	0.27	320	0	36	15	-30	120	Ruby	**121F64**	**4270**	**486265**	14	14	2.0	3509
	3	4.5	0.27	320	0	20	7	-30	75	PCTFE	**E121F43**	**2995**	**481865**	8	9	2.0	3509
	3	4.5	0.27	320	0	25	8.5	-30	75	PCTFE	**E121F43**	**4270**	**481000**	8	8	2.0	3509
	3	4.5	0.27	320	0	36	15	-30	75	PCTFE	**E121F43**	**4270**	**486265**	14	14	2.0	3509
	3	4.5	0.27	320	0	10	7	-10	100	FKM	**E121F4302**	**2995**	**481865**	8	9	2.0/3.0	3509
	3	4.5	0.27	320	0	10	8.5	-10	120	FKM	**E121F4302**	**4270**	**481000**	8	8	2.0/3.0	3509
	3	4.5	0.27	320	0	10	10	-10	120	FKM	**E121F4302**	**4270**	**486265**	14	14	2.0/3.0	3509

For this page	Port size	Orifice (mm)	Kv (l/min)	MOPD (bar)	Fluid Temp (°C)	Amb Temp (°C)
From	5 mm	1.5	1.5	7	-30	-10
To	5 mm	3	4.5	100	130	50

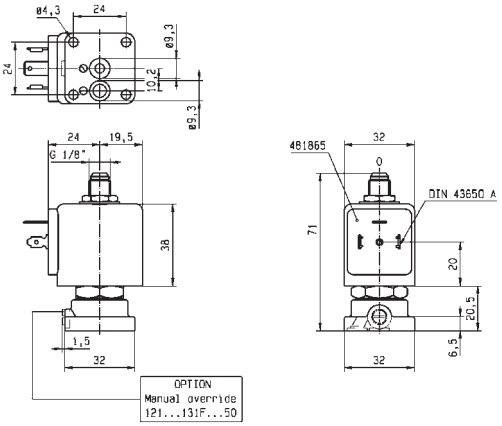

Drawing 3509

2/2 VALVES FOR DRY OR LUBRICATED AIR, NEUTRAL GASES AND LIQUIDS

DIRECT OPERATED

BRASS

SUB-BASE MOUNTING

NORMALLY OPEN

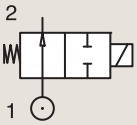

Port size	Orifice Ø	Flow factors			Operating Pressure Differential			Fluid Temp.		Seat Seal	Parker LUCIFER® Valves			Power		Coil Group	Dwg. No.
					Min	Max(MOPD)		Min	Max								
	mm	Kv l/min	KV m³/h	Qn l/min	bar	AC bar	DC bar	°C	°C		Valve Ref.	Housing Ref.	Coil Ref.	AC W	DC W		
SB	1.5	1.5	0.09	80	0	20	20	-10	100	FKM	**122F44**	**2995**	**481865**	8	9	2.1	3509
	1.5	1.5	0.09	80	0	20	20	-10	120	FKM	**122F44**	**4270**	**481000**	8	8	2.1	3509

For this page	Port size	Orifice (mm)	Kv (l/min)	MOPD (bar)	Fluid Temp (°C)	Amb Temp (°C)
From	5 mm	1.5	1.5	20	-10	-10
To	5 mm	1.5	1.5	20	120	50

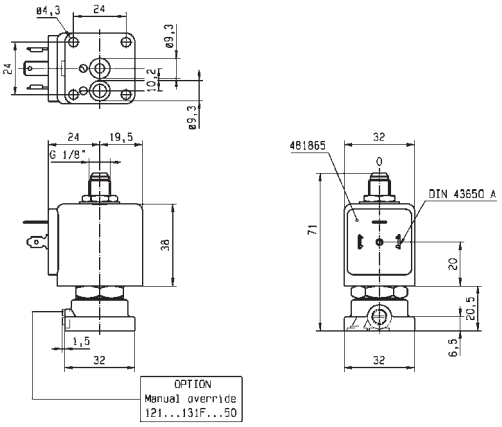

Drawing 3509

2/2 VALVES FOR DRY OR LUBRICATED AIR, NEUTRAL GASES AND LIQUIDS

MAGNALIFT

Commercial Equipment

Industrial Equipment

BRASS

PIPE MOUNTING

NORMALLY CLOSED

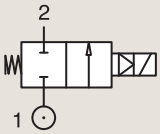

Port size	Orifice Ø	Flow factors			Operating Pressure Differential			Fluid Temp.		Seat Seal	Parker Valves			Power		Coil Group	Dwg. No.
					Min	Max(MOPD)		Min	Max		Valve Order Number	Valve Type	Coil Type				
BSP	mm	Kv l/min	KV m^3/h	Qn m^3/h	bar	AC bar	DC bar	°C	°C					AC W	DC W		
3/8"	13	40	2.4	-	0	5	-	-10	140	FKM	361810	PM123IV	ZB09	9	-	20.1	004
1/2"	13	40	2.4	-	0	5	-	-10	140	FKM	361850	PM123AV	ZB09	9	-	20.1	003
3/4"	20	100	6	-	0	3	-	-10	140	FKM	361910	PM123CV	JB14	14	-	21.0	005
1"	25	117	7	-	0	3	-	-10	140	FKM	361950	PM123DV	JB14	14	-	21.0	006

For this page	Port size	Orifice (mm)	Kv (l/min)	MOPD (bar)	Fluid Temp (°C)	Amb Temp (°C)
From	3/8"	13	40	3	-10	-10
To	1"	25	117	5	140	50

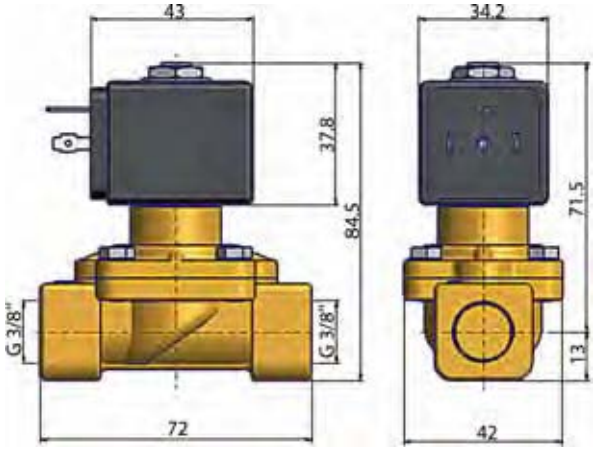

Drawing 004

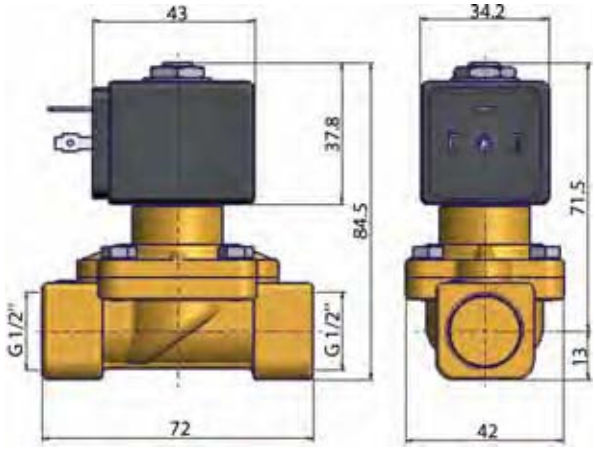

Drawing 003

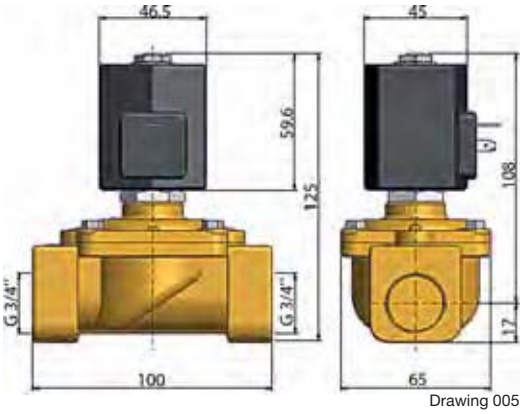

Drawing 005

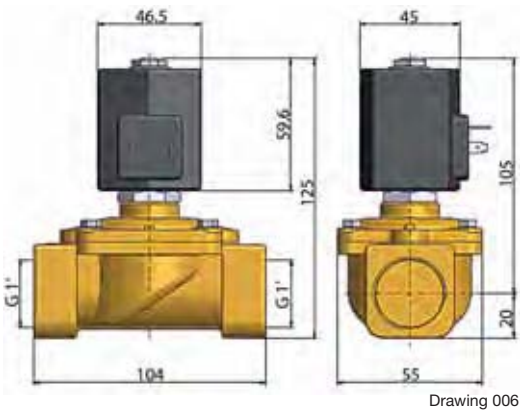

Drawing 006

2/2 VALVES FOR DRY OR LUBRICATED AIR, NEUTRAL GASES AND LIQUIDS

MAGNALIFT

BRASS

PIPE MOUNTING

NORMALLY CLOSED

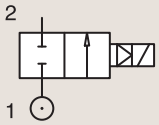

Port size	Orifice Ø	Flow factors			Operating Pressure Differential			Fluid Temp.		Seat Seal	Parker LUCIFER® Valves			Power		Coil Group	Dwg. No.
					Min	Max(MOPD)		Min	Max								
BSP	mm	Kv l/min	KV m³/h	Qn l/min	bar	AC bar	DC bar	°C	°C		Valve Ref.	Housing Ref.	Coil Ref.	AC W	DC W		
3/8"	15	65	3.9	4500	0	16	-	-10	100	NBR	**221G13**	**2995**	**481865**	8	-	2.0	3732
	15	65	3.9	4500	0	16	-	-10	100	NBR	**221G13**	**4270**	**481000**	8	-	2.0	3732
	15	65	3.9	4500	0	16	7	-10	100	NBR	**221G13**	**4270**	**486265**	14	14	2.0	3732
	15	65	3.9	4500	0	16	-	0	100	FKM	**221G23** [1]	**2995**	**481865**	8	-	2.0	3732
	15	65	3.9	4500	0	16	-	0	120	FKM	**221G23** [1]	**4270**	**481000**	8	-	2.0	3732
	15	65	3.9	4500	0	20	7	0	140	FKM	**221G23** [1]	**4270**	**486265**	14	14	2.0	3732
	15	65	3.9	4500	0	-	10	-10	100	FKM	**221G2330** [12]	**2995**	**481865**	-	9	2.1	3732
	15	65	3.9	4500	0	10	10	-10	100	FKM	**221G2330** [12]	**-**	**492070**	9	8	2.1	3732
	15	65	3.9	4500	0	10	10	-10	100	FKM	**221G2330** [12]	**-**	**492190**	11	9	2.1	3732
1/2"	15	65	3.9	4500	0	16	-	-10	100	NBR	**221G15**	**2995**	**481865**	8	-	2.0	3732
	15	65	3.9	4500	0	16	-	-10	100	NBR	**221G15**	**4270**	**481000**	8	-	2.0	3732
	15	65	3.9	4500	0	16	7	-10	100	NBR	**221G15**	**4270**	**486265**	14	14	2.0	3732
	15	65	3.9	4500	0	-	10	-10	100	NBR	**221G1530** [23]	**2995**	**481865**	-	9	2.1	3732
	15	65	3.9	4500	0	10	10	-10	120	NBR	**221G1530** [23]	**-**	**492070**	9	8	2.1	3732
	15	65	3.9	4500	0	10	10	-10	120	NBR	**221G1530** [23]	**-**	**492190**	11	9	2.1	3732
	15	65	3.9	4500	0	16	-	0	100	FKM	**221G25** [1]	**2995**	**481865**	8	-	2.0	3732
	15	65	3.9	4500	0	16	-	0	120	FKM	**221G25** [1]	**4270**	**481000**	8	-	2.0	3732
	15	65	3.9	4500	0	20	7	0	140	FKM	**221G25** [1]	**4270**	**486265**	14	14	2.0	3732
	15	65	3.9	4500	0	-	10	-10	100	FKM	**221G2530** [12]	**2995**	**481865**	-	9	2.1	3732
	15	65	3.9	4500	0	10	10	-10	100	FKM	**221G2530** [12]	**-**	**492070**	9	8	2.1	3732
	15	65	3.9	4500	0	10	10	-10	100	FKM	**221G2530** [12]	**-**	**492190**	11	9	2.1	3732

Notes:

1. Valve only compatible with hydraulic oil and air/neutral gases
2. Valves with model number ending in 30 or 31 are only compatible with explosion proof electrical parts shown, or with group 2.1 coils only in DC voltage.
3. Pilot seat in FKM

For this page	Port size	Orifice (mm)	Kv (l/min)	MOPD (bar)	Fluid Temp (°C)	Amb Temp (°C)
From	3/8"	15	65	7	-10	-10
To	1/2"	15	65	20	140	50

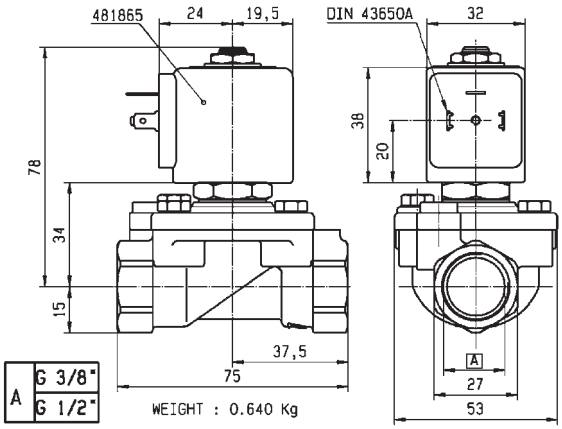

Drawing 3732

2/2 VALVES FOR DRY OR LUBRICATED AIR, NEUTRAL GASES AND LIQUIDS

MAGNALIFT

BRASS
PIPE MOUNTING
NORMALLY CLOSED

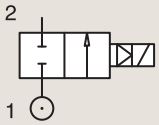

Port size	Orifice Ø	Flow factors			Operating Pressure Differential			Fluid Temp.		Seat Seal	Parker LUCIFER® Valves			Power		Coil Group	Dwg. No.
					Min	Max(MOPD)		Min	Max								
BSP	mm	Kv l/min	KV m³/h	Qn l/min	bar	AC bar	DC bar	°C	°C		Valve Ref.	Housing Ref.	Coil Ref.	AC W	DC W		
3/4"	15	80	4.8	6000	0	16	-	-10	100	NBR	221G16 4	2995	481865	8	-	2.0	3444
	15	80	4.8	6000	0	16	-	-10	100	NBR	221G16 4	4270	481000	8	-	2.0	3444
	15	80	4.8	6000	0	7	7	-10	100	NBR	221G16 4	4270	486265	14	14	2.0	3444
	15	80	4.8	6000	0	16	-	-10	100	NBR	221G1610 3	2995	481865	8	-	2.0	3444
	15	80	4.8	6000	0	16	-	-10	100	NBR	221G1610 3	4270	481000	8	-	2.0	3444
	15	80	4.8	6000	0	16	7	-10	100	NBR	221G1610 3	4270	486265	14	14	2.0	3444
	15	80	4.8	6000	0	10	10	-10	100	NBR	221G1630 24	2995	481865	8	9	2.1	3444
	15	80	4.8	6000	0	10	10	-25	40	NBR	221G1630 24	-	492070	9	8	2.1	3444
	15	80	4.8	6000	0	10	10	-25	40	NBR	221G1630 24	-	492190	11	9	2.1	3444
	15	80	4.8	6000	0	10	10	-10	100	NBR	221G1631 234	2995	481865	8	9	2.1	3444
	15	80	4.8	6000	0	10	10	-25	40	NBR	221G1631 234	-	492070	9	8	2.1	3444
	15	80	4.8	6000	0	10	10	-25	40	NBR	221G1631 234	-	492190	11	9	2.1	3444
	15	80	4.8	6000	0	16	-	0	100	FKM	221G26 1	2995	481865	8	-	2.0	3444
	15	80	4.8	6000	0	16	-	0	120	FKM	221G26 1	4270	481000	8	-	2.0	3444
	15	80	4.8	6000	0	20	7	0	140	FKM	221G26 1	4270	486265	14	14	2.0	3444
	15	80	4.8	6000	0	-	10	-10	100	FKM	221G2630 12	2995	481865	-	9	2.1	3444
	15	80	4.8	6000	0	10	10	-25	40	FKM	221G2630 12	-	492070	9	8	2.1	3444
	15	80	4.8	6000	0	10	10	-25	40	FKM	221G2630 12	-	492190	11	9	2.1	3444

Notes:

1. Valve only compatible with hydraulic oil and air/neutral gases
2. Valves with model number ending in 30 or 31 are only compatible with explosion proof electrical parts shown, or with group 2.1 coils only in DC voltage.
3. With 4 position selector for controlled closure rate
4. Pilot seat in FKM

For this page	Port size	Orifice (mm)	Kv (l/min)	MOPD (bar)	Fluid Temp (°C)	Amb Temp (°C)
From	3/4"	15	80	7	-25	-10
To	3/4"	15	80	20	140	50

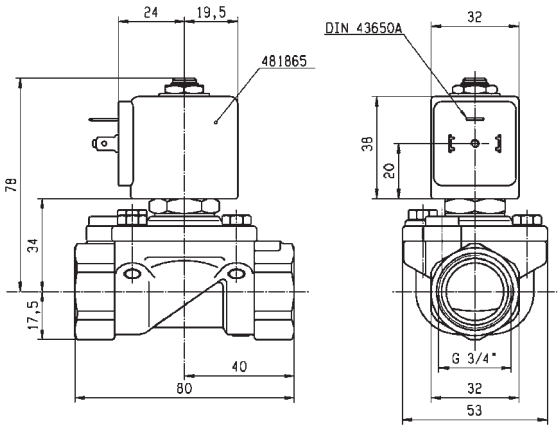

Drawing 3444

2/2 VALVES FOR DRY OR LUBRICATED AIR, NEUTRAL GASES AND LIQUIDS

MAGNALIFT

BRASS
PIPE MOUNTING
NORMALLY CLOSED

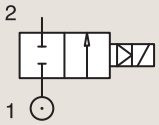

Port size	Orifice Ø	Flow factors			Operating Pressure Differential			Fluid Temp.		Seat Seal	Parker LUCIFER® Valves			Power		Coil Group	Dwg. No.
					Min	Max(MOPD)		Min	Max								
BSP	mm	Kv l/min	KV m³/h	Qn l/min	bar	AC bar	DC bar	°C	°C		Valve Ref.	Housing Ref.	Coil Ref.	AC W	DC W		
1"	15	80	4.8	6000	0	16	-	-10	100	NBR	221G17	2995	481865	8	-	2.0	3445
	15	80	4.8	6000	0	16	1	-10	100	NBR	221G17	4270	481000	8	8	2.0	3445
	15	80	4.8	6000	0	16	7	-10	100	NBR	221G17	4270	486265	14	14	2.0	3445
	15	80	4.8	6000	0	16	-	-10	100	NBR	221G1710 [3]	2995	481865	8	-	2.0	3445
	15	80	4.8	6000	0	16	-	-10	100	NBR	221G1710 [3]	4270	481000	8	-	2.0	3445
	15	80	4.8	6000	0	16	7	-10	100	NBR	221G1710 [3]	4270	486265	14	14	2.0	3445
	15	80	4.8	6000	0	10	10	-10	100	NBR	221G1730 [124]	2995	481865	8	9	2.1	3445
	15	80	4.8	6000	0	10	10	-10	120	NBR	221G1730 [124]	-	492070	9	8	2.1	3445
	15	80	4.8	6000	0	10	10	-10	120	NBR	221G1730 [124]	-	492190	11	9	2.1	3445
	15	80	4.8	6000	0	16	-	0	100	FKM	221G27 [1]	2995	481865	8	-	2.0	3445
	15	80	4.8	6000	0	16	-	0	120	FKM	221G27 [1]	4270	481000	8	-	2.0	3445
	15	80	4.8	6000	0	20	7	0	120	FKM	221G27 [1]	4270	486265	14	14	2.0	3445
	15	80	4.8	6000	0	-	10	0	100	FKM	221G2730 [12]	2995	481865	-	9	2.1	3445
	15	80	4.8	6000	0	10	10	-10	65	FKM	221G2730 [12]	-	492070	9	8	2.1	3445
	15	80	4.8	6000	0	10	10	-10	75	FKM	221G2730 [12]	-	492190	11	9	2.1	3445
	25	170	10.2	14000	0	16	-	-10	100	NBR	221G21	2995	481865	8	-	2.0	3448
	25	170	10.2	14000	0	16	-	-10	100	NBR	221G21	4270	481000	8	-	2.0	3448
	25	170	10.2	14000	0	16	6	-10	100	NBR	221G21	4270	486265	14	14	2.0	3448
	25	160	9.6	14000	0	16	-	0	100	FKM	221G2106 [1]	2995	481865	8	-	2.0	3448
	25	160	9.6	14000	0	16	-	0	120	FKM	221G2106 [1]	4270	481000	8	-	2.0	3448
	25	160	9.6	14000	0	16	6	0	120	FKM	221G2106 [1]	4270	486265	14	14	2.0	3448
	25	160	9.6	14000	0	16	-	-10	100	NBR	221G2110 [3]	2995	481865	8	-	2.0	3448
	25	160	9.6	14000	0	16	-	-10	100	NBR	221G2110 [3]	4270	481000	8	-	2.0	3448
	25	160	9.6	14000	0	16	6	-10	100	NBR	221G2110 [3]	4270	486265	14	14	2.0	3448
	25	170	10.2	14000	0	-	10	-10	100	NBR	221G2130 [124]	2995	481865	-	9	2.1	3448
	25	170	10.2	14000	0	10	10	-25	40	NBR	221G2130 [124]	-	492070	9	8	2.1	3448
	25	170	10.2	14000	0	10	10	-25	40	NBR	221G2130 [124]	-	492190	11	9	2.1	3448
	25	170	10.2	14000	0	-	10	0	100	FKM	221G2136 [1]	2995	481865	-	9	2.0	3448
	25	170	10.2	14000	0	-	10	0	100	FKM	221G2136 [1]	4270	481000	-	8	2.0	3448

Notes:

1. Valve only compatible with hydraulic oil and air/neutral gases
2. Valves with model number ending in 30 or 31 are only compatible with explosion proof electrical parts shown, or with group 2.1 coils only in DC voltage.
3. With 4 position selector for controlled closure rate
4. Pilot seat in FKM

For this page	Port size	Orifice (mm)	Kv (l/min)	MOPD (bar)	Fluid Temp (°C)	Amb Temp (°C)
From	1''	15	80	1	-25	-10
To	1''	25	170	20	120	50

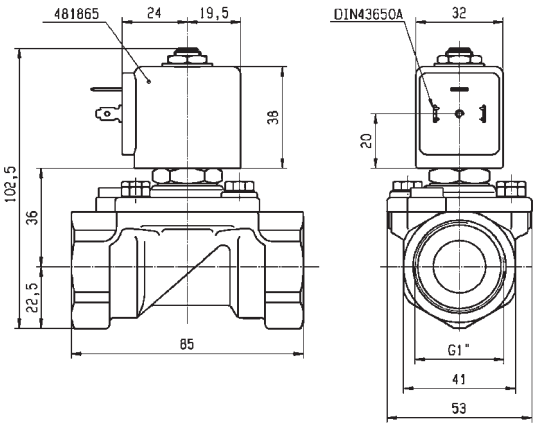

Drawing 3445

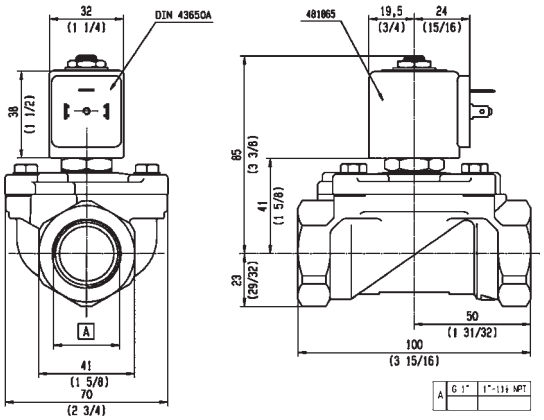

Drawing 3448

2/2 VALVES FOR DRY OR LUBRICATED AIR, NEUTRAL GASES AND LIQUIDS

PILOT OPERATED

Commercial Equipment

Industrial Equipment

BRASS
PIPE MOUNTING
NORMALLY CLOSED

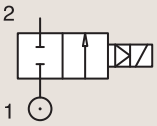

Port size	Orifice Ø	Flow factors			Operating Pressure Differential			Fluid Temp.		Seat Seal	Parker Valves			Power		Coil Group	Dwg. No.
					Min	Max(MOPD)		Min	Max		Valve Order Number	Valve Type	Coil Type				
BSP	mm	Kv l/min	KV m^3/h	Qn m^3/h	bar	AC bar	DC bar	°C	°C					AC W	DC W		
3/8"	13	33	2	-	0.5	16	-	-10	90	NBR	366501 [1]	PM168.1IN	ZB09	9	-	20.1/20.2	048
	13	33	2	-	0.5	-	16	-10	90	NBR	366501 [1]	PM168.1IN	ZB12	-	12	20.1/20.2	048
	13	50	3	-	0.35	15	-	-10	90	NBR	366770	PM173IN	WB4.5	4.5	-	1.3	054
	13	50	3	-	0.35	-	12	-10	90	NBR	366770	PM173IN	WB5.0	-	5	1.3	054
1/2"	13	42	2.5	-	0.5	16	-	-10	90	NBR	366511 [1]	PM168.1AN	ZB09	9	-	20.1/20.2	046
	13	42	2.5	-	0.5	-	16	-10	90	NBR	366511 [1]	PM168.1AN	ZB12	-	12	20.1/20.2	046
	13	58	3.5	-	0.35	15	-	-10	90	NBR	366775	PM173AN	WB4.5	4.5	-	1.3	053
	13	58	3.5	-	0.35	-	12	-10	90	NBR	366775	PM173AN	WB5.0	-	5	1.3	053
3/4"	20	117	7	-	0.5	16	-	-10	90	NBR	366521 [1]	PM168.1CN	ZB09	9	-	20.1/20.2	046
	20	117	7	-	0.5	-	16	-10	90	NBR	366521 [1]	PM168.1CN	ZB12	-	12	20.1/20.2	046
1"	25	133	8	-	0.5	16	-	-10	90	NBR	366531 [1]	PM168.1DN	ZB09	9	-	20.1/20.2	047
	25	133	8	-	0.5	-	16	-10	90	NBR	366531 [1]	PM168.1DN	ZB12	-	12	20.1/20.2	047

Notes:

1. Valve only compatible with air and neutral gases

For this page	Port size	Orifice (mm)	Kv (l/min)	MOPD (bar)	Fluid Temp (°C)	Amb Temp (°C)
From	3/8''	13	33	12	-10	-10
To	1''	25	133	16	90	50

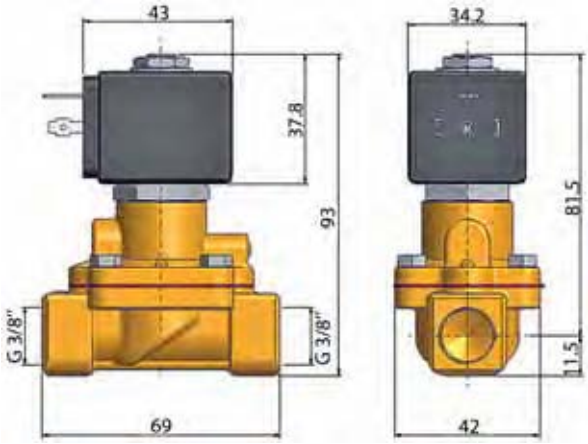

Drawing 048

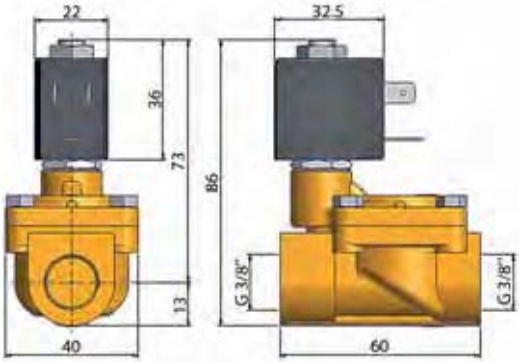

Drawing 054

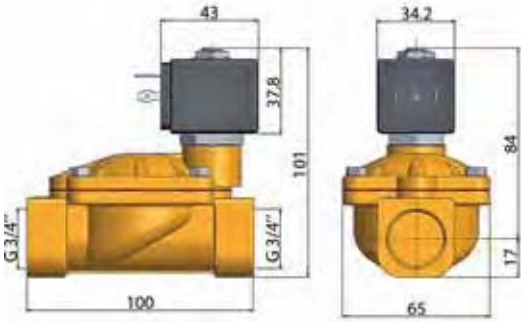

Drawing 046

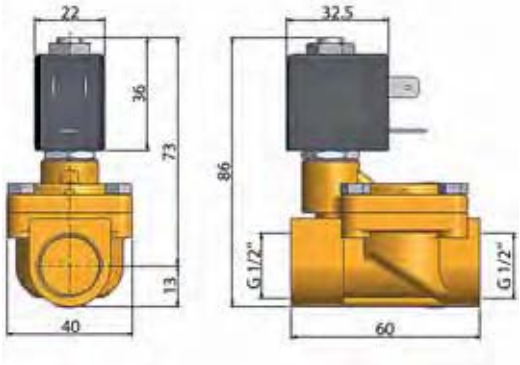

Drawing 053

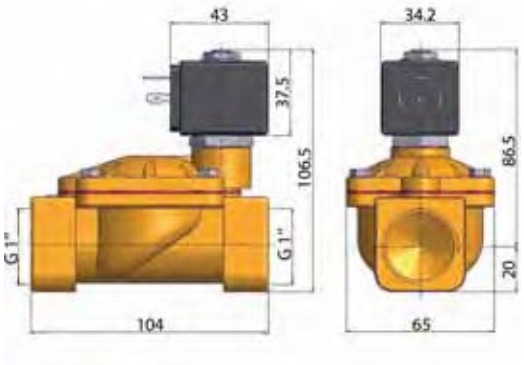

Drawing 047

2/2 VALVES FOR DRY OR LUBRICATED AIR, NEUTRAL GASES AND LIQUIDS

PILOT OPERATED

BRASS

PIPE MOUNTING

NORMALLY CLOSED

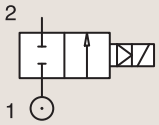

Port size	Orifice Ø	Flow factors			Operating Pressure Differential			Fluid Temp.		Seat Seal	Parker LUCIFER® Valves			Power		Coil Group	Dwg. No.
					Min	Max(MOPD)		Min	Max								
BSP	mm	Kv l/min	KV m³/h	Qn l/min	bar	AC bar	DC bar	°C	°C		Valve Ref.	Housing Ref.	Coil Ref.	AC W	DC W		
1/4"	8	36	2.16	1600	0.3	40	25	-10	100	NBR	E321H11 [124]	2995	481865	8	9	2.0	3523
	8	36	2.16	1600	0.3	40	30	-10	100	NBR	E321H11 [124]	4270	481000	8	8	2.0	3523
	8	36	2.16	1600	0.3	40	40	-10	100	NBR	E321H11 [124]	4270	486265	14	14	2.0	3523
	11	28	1.68	1800	0.2	10	3	-10	100	NBR	E321K10	2995	481865	8	9	2.0	3429
	11	28	1.68	1800	0.2	10	4	-10	100	NBR	E321K10	4270	481000	8	8	2.0	3429
	12	30	1.8	2150	0.3	10	10	-10	100	NBR	321K31	8993	481180	4	5	1.1	7093
	12	30	1.8	2150	0.3	10	7	-10	75	NBR	321K31	8993	488980	2	2.5	1.1	7093
	12	30	1.8	2150	0.3	10	10	-10	100	FKM	321K3106	8993	481180	4	5	1.1	7093
	12	30	1.8	2150	0.3	10	7	-10	75	FKM	321K3106	8993	488980	2	2.5	1.1	7093
	12	32	1.92	2150	0.3	12	12	-10	100	FKM	321K4156 [3]	2995	481865	8	9	2.1/3.0	7094
	12	32	1.92	2150	0.3	12	12	-10	120	FKM	321K4156 [3]	4270	481000	8	8	2.1/3.0	7094

Notes:

1. Minimum pressure differential = 0.3 bar for opening and 0 bar for closing
2. Pilot seat disc in synthetic Ruby
3. Valve with manual override
4. With 4 position selector for controlled closure rate

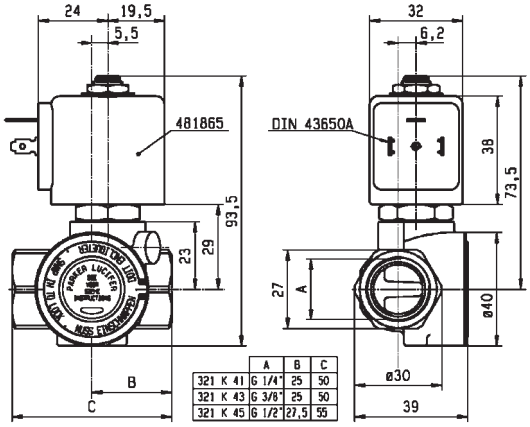

	A	B	C
321 K 41	G 1/4"	25	50
321 K 43	G 3/8"	25	50
321 K 45	G 1/2"	27,5	55

Drawing 7094

For this page	Port size	Orifice (mm)	Kv (l/min)	MOPD (bar)	Fluid Temp (°C)	Amb Temp (°C)
From	1/4"	8	28	3	-10	-10
To	1/4"	12	36	40	120	50

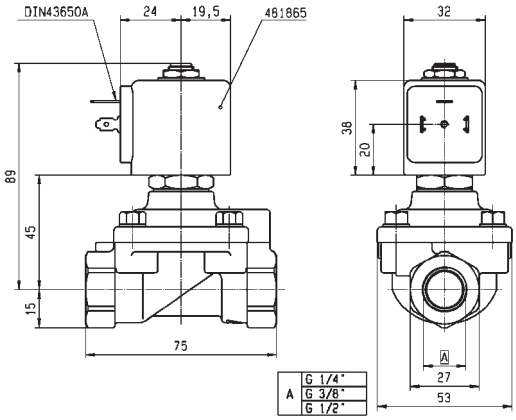

Drawing 3523

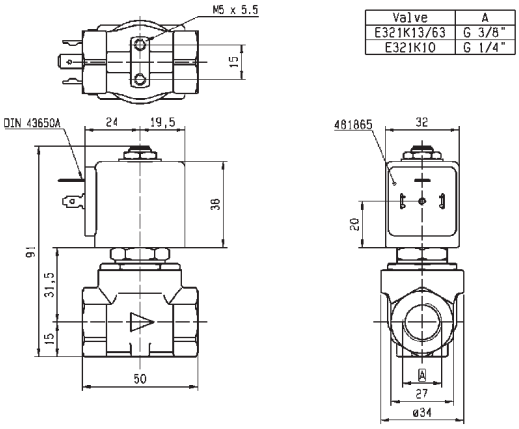

Valve	A
E321K13/63	G 3/8"
E321K10	G 1/4"

Drawing 3429

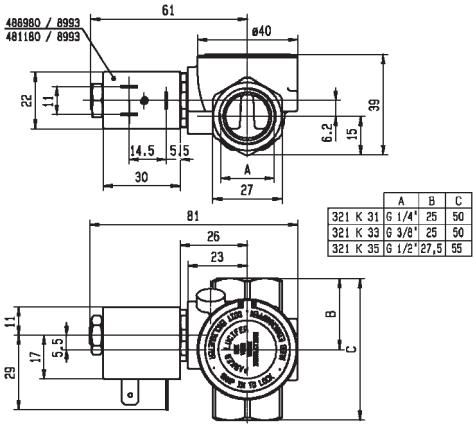

	A	B	C
321 K 31	G 1/4"	25	50
321 K 33	G 3/8"	25	50
321 K 35	G 1/2"	27,5	55

Drawing 7093

2/2 VALVES FOR DRY OR LUBRICATED AIR, NEUTRAL GASES AND LIQUIDS

PILOT OPERATED

BRASS

PIPE MOUNTING

NORMALLY CLOSED

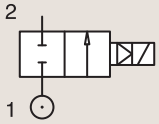

Port size	Orifice Ø	Flow factors			Operating Pressure Differential			Fluid Temp.		Seat Seal	Parker LUCIFER® Valves			Power		Coil Group	Dwg. No.
					Min	Max(MOPD)		Min	Max								
BSP	mm	Kv l/min	KV m³/h	Qn l/min	bar	AC bar	DC bar	°C	°C		Valve Ref.	Housing Ref.	Coil Ref.	AC W	DC W		
3/8"	11	50	3	2800	0.3	40	25	-10	100	NBR	E321H13 [124]	2995	481865	8	9	2.0	3521
	11	50	3	2800	0.3	40	30	-10	100	NBR	E321H13 [124]	4270	481000	8	8	2.0	3521
	11	50	3	2800	0.3	40	40	-10	100	NBR	E321H13 [124]	4270	486265	14	14	2.0	3521
	11	36	2.16	2500	0.2	10	4	-10	100	NBR	E321K13	4270	481000	8	8	2.0	3429
	11	36	2.16	2500	0.2	10	10	-10	100	NBR	E321K13	4270	486265	14	14	2.0	3429
	11	36	2.16	2500	0.2	10	-	-10	100	NBR	E321K1314	2995	483466	8 to 11	-	2.0	3429
	11	36	2.16	2500	0.2	10	10	-10	100	NBR	E321K1314	4270	486265	14	14	2.0	3429
	12	45	2.7	3050	0.3	10	10	-10	100	NBR	321K33	8993	481180	4	5	1.1	7093
	12	45	2.7	3050	0.3	10	7	-10	75	NBR	321K33	8993	488980	2	2.5	1.1	7093
	12	45	2.7	3050	0.3	10	10	-10	100	FKM	321K3306 [1]	8993	481180	4	5	1.1	7093
	12	45	2.7	3050	0.3	10	7	-10	75	FKM	321K3306 [1]	8993	488980	2	2.5	1.1	7093
	12	45	2.7	3050	0.3	12	12	-10	100	FKM	321K4356 [3]	2995	481865	8	9	2.1/3.0	7094
	12	45	2.7	3050	0.3	12	12	-10	120	FKM	321K4356 [3]	4270	481000	8	8	2.1/3.0	7094

Notes:

1. Minimum pressure differential = 0.3 bar for opening and 0 bar for closing
2. Pilot seat disc in synthetic Ruby
3. Valve with manual override
4. With 4 position selector for controlled closure rate

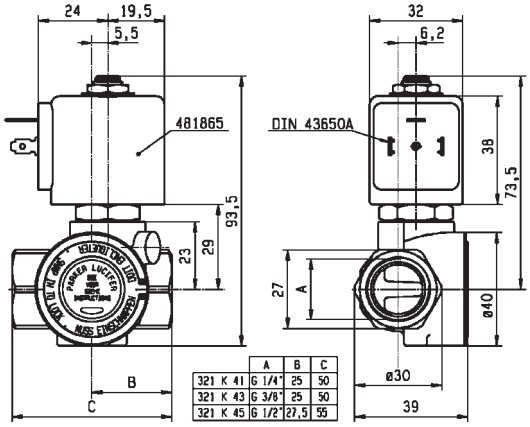

	A	B	C
321 K 41	G 1/4"	25	50
321 K 43	G 3/8"	25	50
321 K 45	G 1/2"	27,5	55

Drawing 7094

For this page	Port size	Orifice (mm)	Kv (l/min)	MOPD (bar)	Fluid Temp (°C)	Amb Temp (°C)
From	3/8"	11	36	4	-10	-10
To	3/8"	12	50	40	120	50

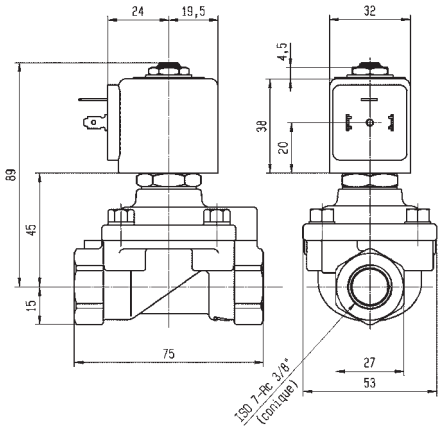

Drawing 3521

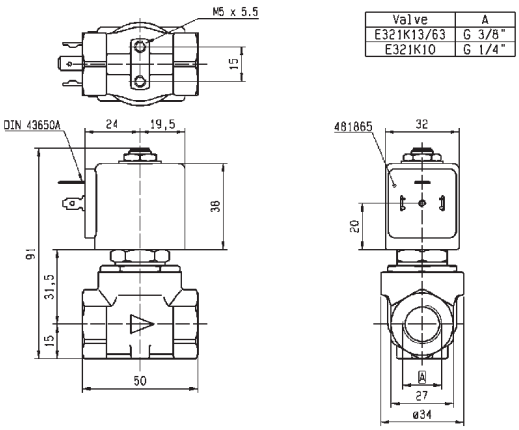

Valve	A
E321K13/63	G 3/8"
E321K10	G 1/4"

Drawing 3429

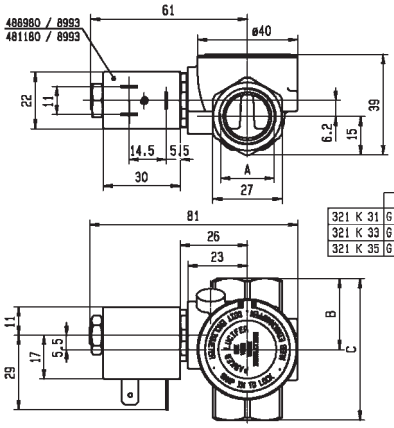

	A	B	C
321 K 31	G 1/4"	25	50
321 K 33	G 3/8"	25	50
321 K 35	G 1/2"	27,5	55

Drawing 7093

2/2 VALVES FOR DRY OR LUBRICATED AIR, NEUTRAL GASES AND LIQUIDS

PILOT OPERATED

BRASS

PIPE MOUNTING

NORMALLY CLOSED

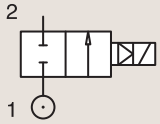

Port size	Orifice Ø	Flow factors			Operating Pressure Differential			Fluid Temp.		Seat Seal	Parker LUCIFER® Valves			IS	Power		Coil Group	Dwg. No.
					Min	Max(MOPD)		Min	Max									
BSP	mm	Kv l/min	KV m³/h	Qn l/min	bar	AC bar	DC bar	°C	°C		Valve Ref.	Housing Ref.	Coil Ref.		AC W	DC W		
1/2"	11	36	2.16	2500	0.2	10	3	-10	100	NBR	E321K15	2995	481865		8	9	2.0	3427
	11	36	2.16	2500	0.2	10	10	-10	120	NBR	E321K15	4270	486265		14	14	2.0	3427
	11	36	2.16	2500	0.2	10	3	-10	100	NBR	E321K1514	2995	481865		8	9	2.0	3427
	11	36	2.16	2500	0.2	10	4	-10	120	NBR	E321K1514	-	483371		8	8	2.0	3427
	11	36	2.16	2500	0.2	10	3	-10	100	NBR	E321K25	2995	481865		8	9	2.0	3427
	11	36	2.16	2500	0.2	4	4	-10	120	NBR	E321K25	-	492070		9	8	2.0	3427
	12	50	3	3400	0.3	10	10	-10	100	NBR	321K35	8993	481180		4	5	1.1	7093
	12	50	3	3400	0.3	10	7	-10	75	NBR	321K35	8993	488980		2	2.5	1.1	7093
	12	50	3	3400	0.3	10	10	-10	100	FKM	321K3506	8993	481180		4	5	1.1	7093
	12	50	3	3400	0.3	10	7	-10	75	FKM	321K3506	8993	488980		2	2.5	1.1	7093
	15	60	3.6	3150	0.3	-	10	-10	100	NBR	321H1590	2995	483580.01	*	-	0.5 to 3	7.0/8.0	3978
	15	60	3.6	3150	0.3	-	10	-10	100	NBR	321H1590	-	488660.01	*	-	0.3 to 3	7.0/8.0	3978
	15	60	3.6	3150	0.3	-	10	-10	100	NBR	321H1590	-	495910	*	-	0.3 to 3	7.0/8.0	3978
	15	60	3.6	3150	1.5	40	40	-10	50	PUR	321H35 [23]	2995	481865		8	9	2.1	3522
	15	60	3.6	3150	1.5	40	40	-10	50	PUR	321H35 [23]	4270	481000		8	8	2.1	3522
	15	60	3.6	3150	0.3	40	25	-10	100	NBR	E321H15 [124]	2995	481865		8	9	2.0	3522
	15	60	3.6	3150	0.3	40	30	-10	100	NBR	E321H15 [124]	4270	481000		8	8	2.0	3522
	15	60	3.6	3150	0.3	40	40	-10	100	NBR	E321H15 [124]	4270	486265		14	14	2.0	3522

Notes:

1. Minimum pressure differential = 0.3 bar for opening and 0 bar for closing
2. Pilot seat disc in synthetic Ruby
3. Valve with manual override
4. With 4 position selector for controlled closure rate

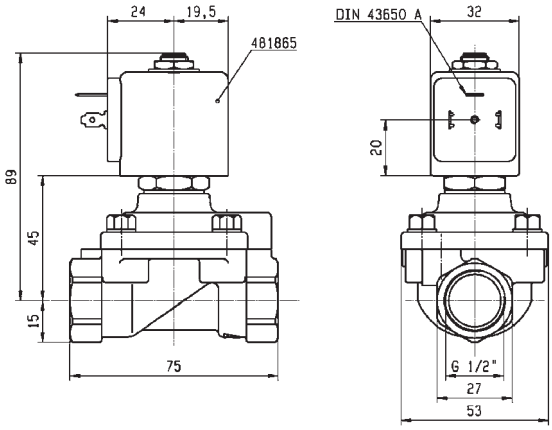

Drawing 3522

For this page	Port size	Orifice (mm)	Kv (l/min)	MOPD (bar)	Fluid Temp (°C)	Amb Temp (°C)
From	1/2"	11	36	3	-10	-10
To	1/2"	15	60	40	120	50

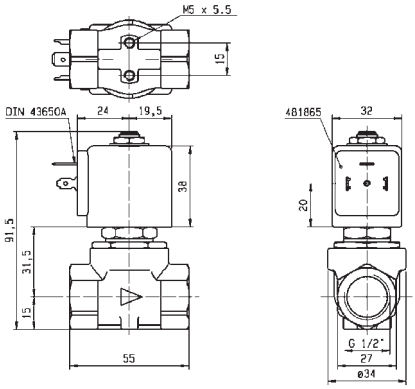

Drawing 3427

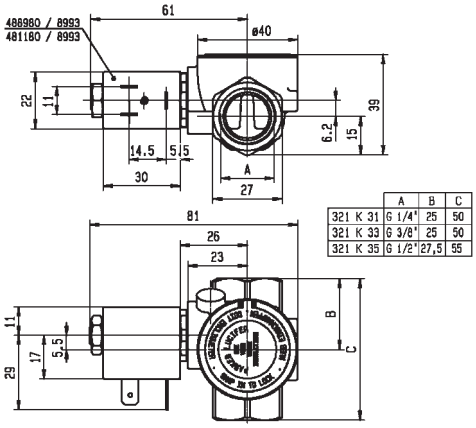

	A	B	C
321 K 31	G 1/4"	25	50
321 K 33	G 3/8"	25	50
321 K 35	G 1/2"	27,5	55

Drawing 7093

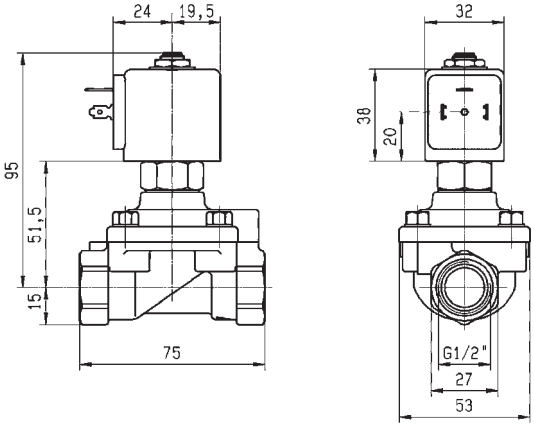

Drawing 3978

2/2 VALVES FOR DRY OR LUBRICATED AIR, NEUTRAL GASES AND LIQUIDS

PILOT OPERATED

BRASS

PIPE MOUNTING

NORMALLY CLOSED

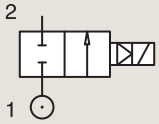

Port size	Orifice Ø	Flow factors			Operating Pressure Differential			Fluid Temp.		Seat Seal	Parker LUCIFER® Valves			Power		Coil Group	Dwg. No.
					Min	Max(MOPD)		Min	Max								
BSP	mm	Kv l/min	KV m³/h	Qn l/min	bar	AC bar	DC bar	°C	°C		Valve Ref.	Housing Ref.	Coil Ref.	AC W	DC W		
3/4"	15	-	-	3550	1.5	40	40	-10	50	PUR	**321H36** [1]	**2995**	**481865**	8	9	2.1	3696
	15	-	-	3550	1.5	40	40	-10	50	PUR	**321H36** [1]	**4270**	**481000**	8	8	2.1	3696
	18	100	6	9400	0.3	10	10	-10	100	NBR	**321K36**	**8993**	**481180**	4	5	1.1	7097
	18	100	6	9400	0.3	10	7	-10	75	NBR	**321K36**	**8993**	**488980**	2	2.5	1.1	7097
	18	100	6	9400	0.3	10	10	-10	100	FKM	**321K3606**	**8993**	**481180**	4	5	1.1	7097
	18	100	6	9400	0.3	10	7	-10	75	FKM	**321K3606**	**8993**	**488980**	2	2.5	1.1	7097
	20	135	8.1	9500	0.3	16	16	-10	100	NBR	**E321G36**	**2995**	**481865**	8	9	2.0	3442
	20	135	8.1	9500	0.3	16	16	-10	100	NBR	**E321G36**	**4270**	**481000**	8	8	2.0	3442
	20	135	8.1	9500	0.3	16	16	-10	100	FKM	**E321G3606**	**2995**	**481865**	8	9	2.0/14.1	3442
	20	135	8.1	9500	0.3	16	16	-10	120	FKM	**E321G3606**	**4270**	**481000**	8	8	2.0/14.1	3442
	20	135	8.1	9500	0.3	16	16	-10	120	FKM	**E321G3606**	**4270**	**486265**	14	14	2.0/14.1	3442

Notes:

1. Pilot seat disc in synthetic Ruby

For this page	Port size	Orifice (mm)	Kv (l/min)	MOPD (bar)	Fluid Temp (°C)	Amb Temp (°C)
From	3/4"	15	100	7	-10	-10
To	3/4"	20	135	40	120	50

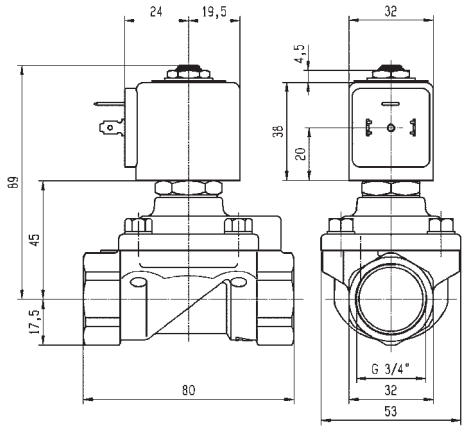

Drawing 3696

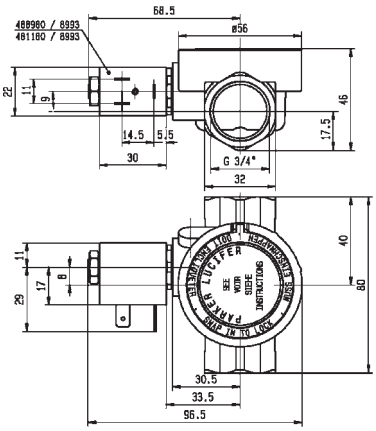

Drawing 7097

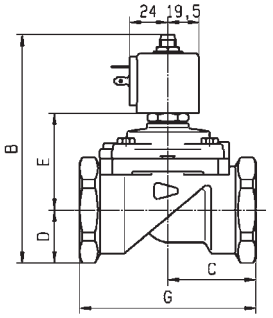

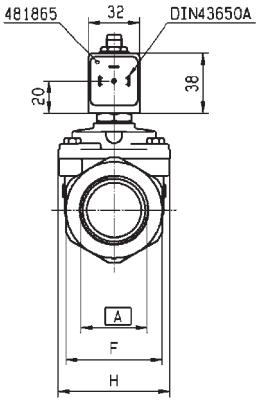

	RACCORD A	B	C	D	E	F	G	H
321/322/E321G36..	BSP 3/4"	121	50	23	54	41	100	70
321/322/E321G37..	BSP 1"	121	50	23	54	41	100	70
321/322/E321G38..	BSP 1 1/4"	137.5	55	33	60.5	50	110	70
321/322/E321G39..	BSP 1 1/2"	144	75	33	67	60	140	99
321G3966/G3967	UNF 1 7/8"	144	75	33	67	60	140	99
U321/U322G40..	BSP 2"	158.5	80	41.5	73	75	150	99

Drawing 3442

2/2 VALVES FOR DRY OR LUBRICATED AIR, NEUTRAL GASES AND LIQUIDS
PILOT OPERATED

BRASS
PIPE MOUNTING
NORMALLY CLOSED

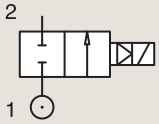

Port size	Orifice Ø	Flow factors			Operating Pressure Differential			Fluid Temp.		Seat Seal	Parker LUCIFER® Valves			IS	Power		Coil Group	Dwg. No.
					Min	Max(MOPD)		Min	Max		Valve Ref.	Housing Ref.	Coil Ref.					
BSP	mm	Kv l/min	KV m³/h	Qn l/min	bar	AC bar	DC bar	°C	°C						AC W	DC W		
	18	110	6.6	10150	0.3	10	10	-10	100	NBR	**321K37**	**8993**	**481180**		4	5	1.1	7098
	18	110	6.6	10150	0.3	10	7	-10	75	NBR	**321K37**	**8993**	**488980**		2	2.5	1.1	7098
	18	110	6.6	10150	0.3	10	10	-10	100	FKM	**321K3706**	**8993**	**481180**		4	5	1.1	7098
	18	110	6.6	10150	0.3	10	7	-10	75	FKM	**321K3706**	**8993**	**488980**		2	2.5	1.1	7098
	25	185	11.1	14100	0.3	-	10	-10	75	NBR	**321G3790**	**2995**	**483580.01**	*	-	0.5 to 3	7.0/8.0	3442
	25	185	11.1	14100	0.3	-	10	-10	75	NBR	**321G3790**	**-**	**488660.01**	*	-	0.3 to 3	7.0/8.0	3442
	25	185	11.1	14100	0.3	-	10	-10	75	NBR	**321G3790**	**-**	**495910**	*	-	0.3 to 3	7.0/8.0	3442
1"	25	180	10.8	14000	0.3	16	16	-10	100	NBR	**E321G37**	**2995**	**481865**		8	9	2.0	3442
	25	180	10.8	14000	0.3	16	16	-10	100	NBR	**E321G37**	**4270**	**481000**		8	8	2.0	3442
	25	180	10.8	14000	0.3	16	16	-10	100	FKM	**E321G3706**	**2995**	**481865**		8	9	2.0/14.1	3442
	25	180	10.8	14000	0.3	16	16	-10	120	FKM	**E321G3706**	**4270**	**481000**		8	8	2.0/14.1	3442
	25	180	10.8	14000	0.3	16	16	-10	120	FKM	**E321G3706**	**4270**	**486265**		14	14	2.0/14.1	3442
	28	270	16.2	18000	0.3	16	16	-10	100	NBR	**E321G38**	**2995**	**481865**		8	9	2.0	3442
	28	270	16.2	18000	0.3	16	16	-10	100	NBR	**E321G38**	**4270**	**481000**		8	8	2.0	3442
	28	270	16.2	18000	0.3	16	16	-10	100	FKM	**E321G3806**	**2995**	**481865**		8	9	2.0	3442
	28	270	16.2	18000	0.3	16	16	-10	120	FKM	**E321G3806**	**4270**	**481000**		8	8	2.0	3442
	28	270	16.2	18000	0.3	16	16	-10	100	FKM	**E321G3806**	**4270**	**486265**		14	14	2.0	3442

For this page	Port size	Orifice (mm)	Kv (l/min)	MOPD (bar)	Fluid Temp (°C)	Amb Temp (°C)
From	1''	18	110	7	-10	-10
To	1''	28	270	16	120	50

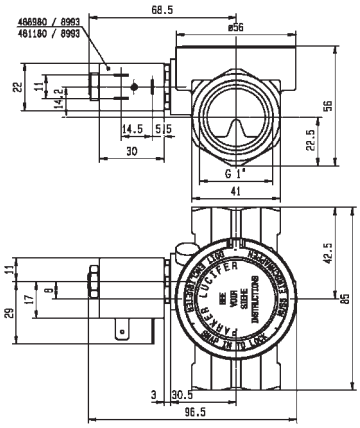

Drawing 7098

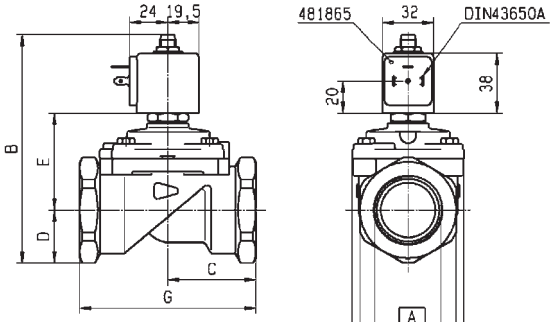

	RACCORD A	B	C	D	E	F	G	H
321/322/E321G36..	BSP 3/4"	121	50	23	54	41	100	70
321/322/E321G37..	BSP 1"	121	50	23	54	41	100	70
321/322/E321G38..	BSP 1 1/4"	137.5	55	33	60.5	50	110	70
321/322/E321G39..	BSP 1 1/2"	144	75	33	67	50	140	99
321G396/G3962	UNF 1 7/8"	144	75	33	67	60	140	99
U321/U322G40..	BSP 2"	158.5	80	41.5	73	75	150	99

Drawing 3442

2/2 VALVES FOR DRY OR LUBRICATED AIR, NEUTRAL GASES AND LIQUIDS
PILOT OPERATED

BRASS
PIPE MOUNTING
NORMALLY CLOSED

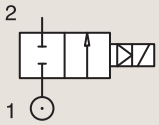

Port size	Orifice Ø	Flow factors			Operating Pressure Differential			Fluid Temp.		Seat Seal	Parker LUCIFER® Valves			IS	Power		Coil Group	Dwg. No.
					Min	Max(MOPD)		Min	Max		Valve Ref.	Housing Ref.	Coil Ref.					
BSP	mm	Kv l/min	KV m³/h	Qn l/min	bar	AC bar	DC bar	°C	°C						AC W	DC W		
1 1/2"	40	425	25.5	31500	0.5	-	10	-10	75	NBR	**321G3990**	**2995**	**483580.01**	*	-	0.5 to 3	7.0/8.0	8113
	40	425	25.5	31500	0.5	-	10	-10	75	NBR	**321G3990**	**-**	**488660.01**	*	-	0.3 to 3	7.0/8.0	8113
	40	425	25.5	31500	0.5	-	10	-10	75	NBR	**321G3990**	**-**	**495910**	*	-	0.3 to 3	7.0/8.0	8113
	40	420	25.2	31500	0.3	16	7	-10	100	NBR	**E321G39** [1]	**2995**	**481865**		8	9	2.0	3442
	40	420	25.2	31500	0.3	16	8.5	-10	100	NBR	**E321G39** [1]	**4270**	**481000**		8	8	2.0	3442
	40	420	25.2	31500	0.3	16	7	-10	100	FKM	**E321G3906**	**2995**	**481865**		8	9	2.0	3442
	40	420	25.2	31500	0.3	16	8.5	-10	120	FKM	**E321G3906**	**4270**	**481000**		8	8	2.0	3442
	40	420	25.2	31500	0.3	16	16	-10	100	FKM	**E321G3906**	**4270**	**486265**		14	14	2.0	3442
2"	40	540	32.4	38100	0.5	-	10	-10	75	NBR	**321G4090**	**2995**	**483580.01**	*	-	0.5 to 3	7.0/8.0	8113
	40	540	32.4	38100	0.5	-	10	-10	75	NBR	**321G4090**	**-**	**488660.01**	*	-	0.3 to 3	7.0/8.0	8113
	40	540	32.4	38100	0.5	-	10	-10	75	NBR	**321G4090**	**-**	**495910**	*	-	0.3 to 3	7.0/8.0	8113
	40	540	32.4	40000	0.3	16	7	-10	100	NBR	**E321G40** [1]	**2995**	**481865**		8	9	2.0	3442
	40	540	32.4	40000	0.3	16	8.5	-10	100	NBR	**E321G40** [1]	**4270**	**481000**		8	8	2.0	3442
	40	540	32.4	40000	0.3	16	7	-10	100	FKM	**E321G4006**	**2995**	**481865**		8	9	2.0	3442
	40	540	32.4	40000	0.3	16	8.5	-10	120	FKM	**E321G4006**	**4270**	**481000**		8	8	2.0	3442
	40	540	32.4	40000	0.3	16	7	-10	120	FKM	**E321G4006**	**4270**	**486265**		14	14	2.0	3442

Notes:

1. Pilot seat disc in synthetic Ruby

For this page	Port size	Orifice (mm)	Kv (l/min)	MOPD (bar)	Fluid Temp (°C)	Amb Temp (°C)
From	1 1/2"	40	420	7	-10	-10
To	2"	40	540	16	120	50

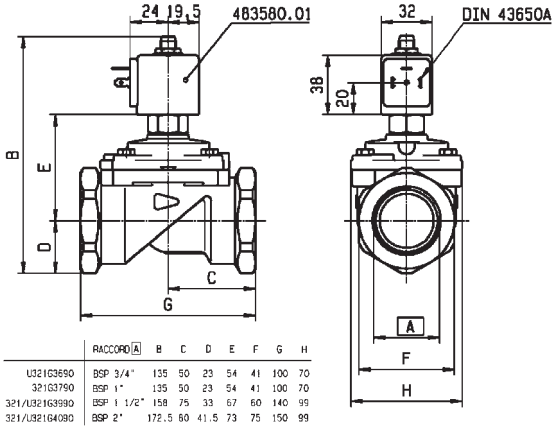

	RACCORD A	B	C	D	E	F	G	H
U321G3690	BSP 3/4"	135	50	23	54	41	100	70
321G3790	BSP 1"	135	50	23	54	41	100	70
321/U321G3990	BSP 1 1/2"	158	75	33	67	60	140	99
321/U321G4090	BSP 2"	172.5	80	41.5	73	75	150	99

Drawing 8113

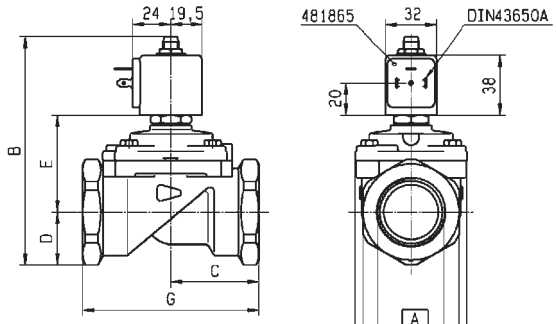

	RACCORD A	B	C	D	E	F	G	H
321/322/E321G36..	BSP 3/4"	121	50	23	54	41	100	70
321/322/E321G37..	BSP 1"	121	50	23	54	41	100	70
321/322/E321G38..	BSP 1 1/4"	137.5	55	33	60.5	50	110	70
321/322/E321G39..	BSP 1 1/2"	144	75	33	67	60	140	99
321G396/G3967	UNF 1 7/8"	144	75	33	67	60	140	99
U321/U322G40..	BSP 2"	158.5	80	41.5	73	75	150	99

Drawing 3442

2/2 VALVES FOR DRY OR LUBRICATED AIR, NEUTRAL GASES AND LIQUIDS

PILOT OPERATED

BRASS

PIPE MOUNTING

NORMALLY OPEN

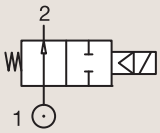

Port size	Orifice Ø	Flow factors			Operating Pressure Differential			Fluid Temp.		Seat Seal	Parker Valves			Power		Coil Group	Dwg. No.
					Min	Max(MOPD)		Min	Max		Valve Order Number	Valve Type	Coil Type				
BSP	mm	Kv l/min	KV m³/h	Qn m³/h	bar	AC bar	DC bar	°C	°C					AC W	DC W		
3/8"	13	33	2	-	0.5	-	16	-10	90	NBR	366601 [1]	PM169.1IN	ZB16	-	12	20.1/20.2	052
	13	33	2	-	0.5	16	-	-10	90	NBR	366601 [1]	PM169.1IN	ZH14	9	-	20.1/20.2	052
1/2"	13	42	2.5	-	0.5	-	16	-10	90	NBR	366606 [1]	PM169.1AN	ZB16	-	12	20.1/20.2	049
	13	42	2.5	-	0.5	16	-	-10	90	NBR	366606 [1]	PM169.1AN	ZH14	9	-	20.1/20.2	049
3/4"	20	117	7	-	0.5	-	16	-10	90	NBR	366611 [1]	PM169.1CN	ZB16	-	12	20.1/20.2	050
	20	117	7	-	0.5	16	-	-10	90	NBR	366611 [1]	PM169.1CN	ZH14	9	-	20.1/20.2	050
1"	25	133	8	-	0.5	-	16	-10	90	NBR	366616 [1]	PM169.1DN	ZB16	-	12	20.1/20.2	051
	25	133	8	-	0.5	16	-	-10	90	NBR	366616 [1]	PM169.1DN	ZH14	9	-	20.1/20.2	051

Notes:

1. Valve only compatible with air and neutral gases

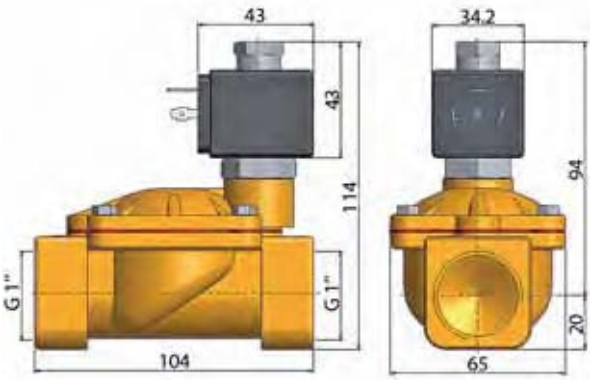

Drawing 051

For this page	Port size	Orifice (mm)	Kv (l/min)	MOPD (bar)	Fluid Temp (°C)	Amb Temp (°C)
From	3/8"	13	33	16	-10	-10
To	1"	25	133	16	90	50

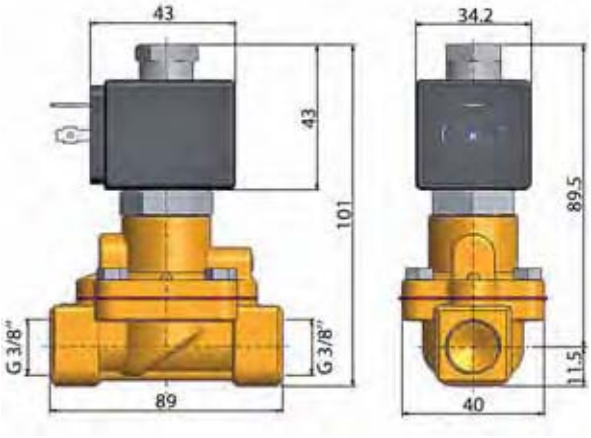

Drawing 052

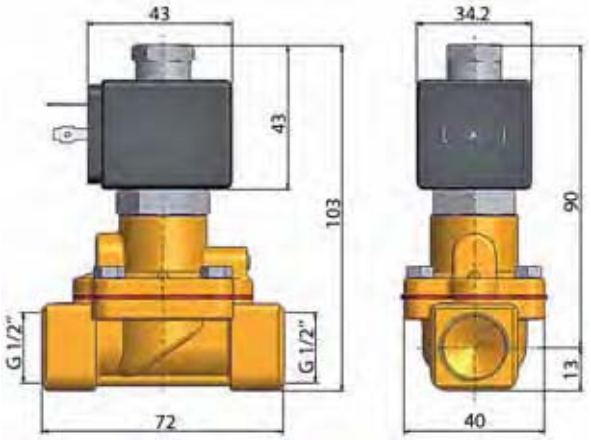

Drawing 049

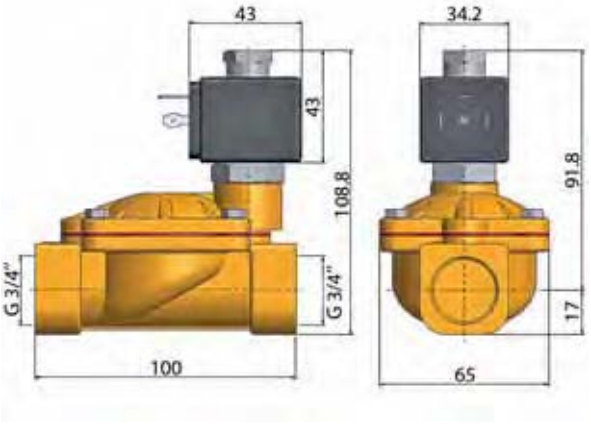

Drawing 050

2/2 VALVES FOR DRY OR LUBRICATED AIR, NEUTRAL GASES AND LIQUIDS
PILOT OPERATED

BRASS
PIPE MOUNTING
NORMALLY OPEN

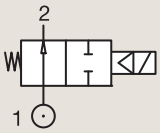

Port size	Orifice Ø	Flow factors			Operating Pressure Differential			Fluid Temp.		Seat Seal	Parker LUCIFER® Valves			Power		Coil Group	Dwg. No.
					Min	Max(MOPD)		Min	Max		Valve Ref.	Housing Ref.	Coil Ref.				
BSP	mm	Kv l/min	KV m³/h	Qn l/min	bar	AC bar	DC bar	°C	°C					AC W	DC W		
1/4"	8	36	2.16	1600	0.3	40	25	-10	100	NBR	322H71 12	2995	481865	8	9	2.0	3523
	8	36	2.16	1600	0.3	40	30	-10	100	NBR	322H71 12	4270	481000	8	8	2.0	3523
	8	36	2.16	1600	0.3	40	40	-10	100	NBR	322H71 12	4270	486265	14	14	2.0	3523
	8	36	2.16	1600	0.3	40	40	-10	100	FKM	322H7106 12	2995	481865	8	9	2.0/14.1	3523
	8	36	2.16	1600	0.3	40	40	-10	120	FKM	322H7106 12	4270	481000	8	8	2.0/14.1	3523
	8	36	2.16	1600	0.3	40	40	-10	140	FKM	322H7106 12	4270	486265	14	14	2.0/14.1	3523
3/8"	11	50	3	3240	0.3	40	40	-10	75	NBR	322H73 12	2995	481865	8	9	2.0	3523
	11	50	3	3240	0.3	40	40	-10	75	NBR	322H73 12	4270	481000	8	8	2.0	3523
	11	50	3	3240	0.3	40	40	-10	75	NBR	322H73 12	4270	486265	14	14	2.0	3523
	11	50	3	3240	0.3	40	40	-10	100	FKM	322H7306 12	2995	481865	8	9	2.0/14.1	3523
	11	50	3	3240	0.3	40	40	-10	100	FKM	322H7306 12	4270	481000	8	8	2.0/14.1	3523
	11	50	3	3240	0.3	40	40	-10	140	FKM	322H7306 12	4270	486265	14	14	2.0/14.1	3523
1/2"	15	60	3.6	3890	0.3	15	15	-10	100	NBR	322G75	2995	481865	8	9	2.1	3522
	15	60	3.6	3890	0.3	15	15	-10	100	NBR	322G75	4270	481000	8	8	2.1	3522
	15	60	3.6	3890	0.3	20	20	-10	100	FKM	322G7506 1	2995	481865	8	9	2.0	3522
	15	60	3.6	3890	0.3	20	20	-10	100	FKM	322G7506 1	4270	481000	8	8	2.0	3522
	15	60	3.6	3890	0.3	20	20	-10	100	FKM	322G7506 1	4270	486265	14	14	2.0	3522
	15	60	3.6	3150	1.5	40	40	-10	50	PUR	322H35 3	2995	481865	8	9	2.1	7569
	15	60	3.6	3150	1.5	40	40	-10	50	PUR	322H35 3	4270	481000	8	8	2.1	7569
	15	60	3.6	3890	0.3	40	40	-10	100	NBR	322H75 12	2995	481865	8	9	2.0	3522
	15	60	3.6	3890	0.3	40	40	-10	100	NBR	322H75 12	4270	481000	8	8	2.0	3522
	15	60	3.6	3890	0.3	40	40	-10	100	NBR	322H75 12	4270	486265	14	14	2.0	3522
	15	60	3.6	3890	0.3	40	40	-10	100	FKM	322H7506 12	2995	481865	8	9	2.0/14.1	3522
	15	60	3.6	3890	0.3	40	40	-10	120	FKM	322H7506 12	4270	481000	8	8	2.0/14.1	3522
	15	60	3.6	3890	0.3	40	40	-10	140	FKM	322H7506 12	4270	486265	14	14	2.0/14.1	3522

Notes:

1. Minimum pressure differential = 0.3 bar for opening and 0 bar for closing
2. Pilot seat disc in synthetic Ruby
3. Valve only compatible with air and neutral gases

For this page	Port size	Orifice (mm)	Kv (l/min)	MOPD (bar)	Fluid Temp (°C)	Amb Temp (°C)
From	1/4"	8	36	15	-10	-10
To	1/2"	15	60	40	140	50

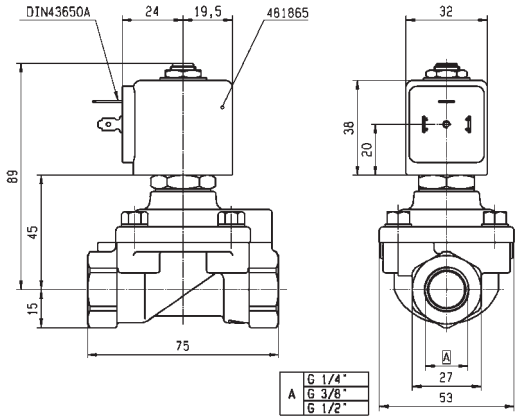

Drawing 3523

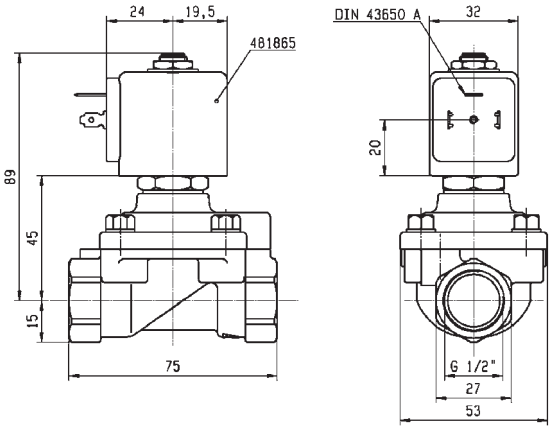

Drawing 3522

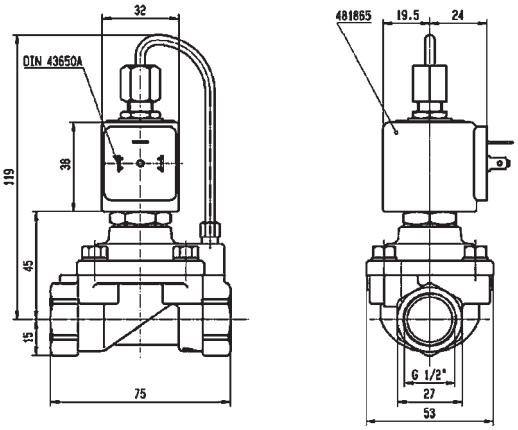

Drawing 7569

2/2 VALVES FOR DRY OR LUBRICATED AIR, NEUTRAL GASES AND LIQUIDS

PILOT OPERATED

BRASS

PIPE MOUNTING

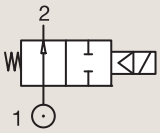

NORMALLY OPEN

Port size	Orifice Ø	Flow factors			Operating Pressure Differential			Fluid Temp.		Seat Seal	Parker LUCIFER® Valves			Power		Coil Group	Dwg. No.
					Min	Max(MOPD)		Min	Max								
BSP	mm	Kv l/min	KV m³/h	Qn l/min	bar	AC bar	DC bar	°C	°C		Valve Ref.	Housing Ref.	Coil Ref.	AC W	DC W		
3/4"	15	-	-	3550	1.5	40	40	-10	50	PUR	322H36 12	2995	481865	8	9	2.1	7570
	15	-	-	3550	1.5	40	40	-10	50	PUR	322H36 12	4270	481000	8	8	2.1	7570
	20	135	8.1	9500	0.3	16	16	-10	100	NBR	322G36	2995	481865	8	9	2.1	3442
	20	135	8.1	9500	0.3	16	16	-10	100	NBR	322G36	4270	481000	8	8	2.1	3442
	20	135	8.1	9500	0.3	16	16	-10	100	FKM	322G3606	2995	481865	8	9	2.1	3442
	20	135	8.1	9500	0.3	16	16	-10	120	FKM	322G3606	4270	481000	8	8	2.1	3442
1"	25	180	10.8	14000	0.3	16	16	-10	100	NBR	322G37	2995	481865	8	9	2.1	3442
	25	180	10.8	14000	0.3	16	16	-10	100	NBR	322G37	4270	481000	8	8	2.1	3442
	25	180	10.8	14000	0.3	16	16	-10	100	FKM	322G3706	2995	481865	8	9	2.1	3442
	25	180	10.8	14000	0.3	16	16	-10	120	FKM	322G3706	4270	481000	8	8	2.1	3442
1 1/4"	28	270	16.2	18000	0.3	16	16	-10	100	NBR	322G38	2995	481865	8	9	2.1	3442
	28	270	16.2	18000	0.3	16	16	-10	100	NBR	322G38	4270	481000	8	8	2.1	3442
	28	270	16.2	18000	0.3	16	16	-10	100	FKM	322G3806	2995	481865	8	9	2.1	3442
	28	270	16.2	18000	0.3	16	16	-10	120	FKM	322G3806	4270	481000	8	8	2.1	3442
1 1/2"	40	420	25.2	31500	0.3	12	12	-10	100	NBR	322G39	2995	481865	8	9	2.1	3442
	40	420	25.2	31500	0.3	12	12	-10	100	NBR	322G39	4270	481000	8	8	2.1	3442
	40	420	25.2	31500	0.3	12	12	-10	100	FKM	322G3906	2995	481865	8	9	2.1	3442
	40	420	25.2	31500	0.3	12	12	-10	100	FKM	322G3906	4270	481000	8	8	2.1	3442
2"	40	540	32.4	40000	0.3	12	12	-10	100	NBR	322G40	2995	481865	8	9	2.1	3442
	40	540	32.4	40000	0.3	12	12	-10	100	NBR	322G40	4270	481000	8	8	2.1	3442
	40	540	32.4	40000	0.3	12	12	-10	100	FKM	322G4006	2995	481865	8	9	2.1	3442
	40	540	32.4	40000	0.3	12	12	-10	120	FKM	322G4006	4270	481000	8	8	2.1	3442

Notes:

1. Minimum pressure differential = 1.5 bar for opening and 0.3 bar for closing
2. Valve only compatible with air and neutral gases

For this page	Port size	Orifice (mm)	Kv (l/min)	MOPD (bar)	Fluid Temp (°C)	Amb Temp (°C)
From	3/4''	15	-	12	-10	-10
To	2''	40	540	40	120	50

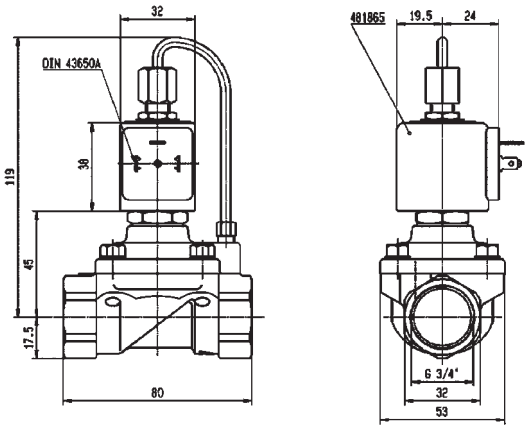

Drawing 7570

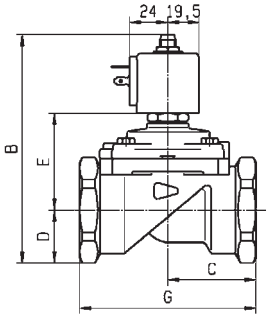

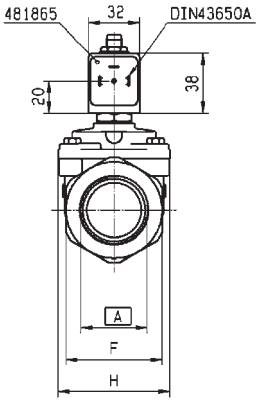

	RACCORD A	B	C	D	E	F	G	H
321/322/E321G36..	BSP 3/4"	121	50	23	54	41	100	70
321/322/E321G37..	BSP 1"	121	50	23	54	41	100	70
321/322/E321G38..	BSP 1 1/4"	137.5	55	33	60.5	50	110	70
321/322/E321G39..	BSP 1 1/2"	144	75	33	67	50	140	99
321G396/G3967	UNF 1 7/8"	144	75	33	67	60	140	99
U321/U322G40..	BSP 2"	158.5	80	41.5	73	75	150	99

Drawing 3442

2/2 VALVES FOR DRY OR LUBRICATED AIR, NEUTRAL GASES AND LIQUIDS

PILOT OPERATED

BRASS

PIPE MOUNTING

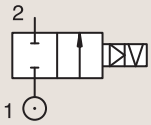

CONTROL BY ELECTRIC IMPULSE

Port size	Orifice Ø	Flow factors			Operating Pressure Differential			Fluid Temp.		Seat Seal	Parker LUCIFER® Valves			Power		Coil Group	Dwg. No.
					Min	Max(MOPD)		Min	Max		Valve Ref.	Housing Ref.	Coil Ref.				
BSP	mm	Kv l/min	KV m³/h	Qn l/min	bar	AC bar	DC bar	°C	°C					AC W	DC W		
1/4"	12	32	1.92	2150	0.3	12	-	-10	100	FKM	325K4106	4269	484990	11	-	4.0	7094
	12	32	1.92	2150	0.3	-	12	-10	100	FKM	325K4106	4269	485400	-	13	4.0	7094
3/8"	12	45	2.7	3050	0.3	12	-	-10	100	FKM	325K4306	4269	484990	11	-	4.0	7094
	12	45	2.7	3050	0.3	-	12	-10	100	FKM	325K4306	4269	485400	-	13	4.0	7094
1/2"	12	50	3	3400	0.3	12	-	-10	100	FKM	325K4506	4269	484990	11	-	4.0	7094
	12	50	3	3400	0.3	-	12	-10	100	FKM	325K4506	4269	485400	-	13	4.0	7094
3/4"	18	100	6	9400	0.3	12	-	-10	100	FKM	325K4606	4269	484990	11	-	4.0	7099
	18	100	6	9400	0.3	-	12	-10	100	FKM	325K4606	4269	485400	-	13	4.0	7099
1"	18	110	6.6	10150	0.3	12	-	-10	100	FKM	325K4706	4269	484990	11	-	4.0	7100
	18	110	6.6	10150	0.3	-	12	-10	100	FKM	325K4706	4269	485400	-	13	4.0	7100

For this page	Port size	Orifice (mm)	Kv (l/min)	MOPD (bar)	Fluid Temp (°C)	Amb Temp (°C)
From	1/4"	12	32	12	-10	-10
To	1"	18	110	12	100	50

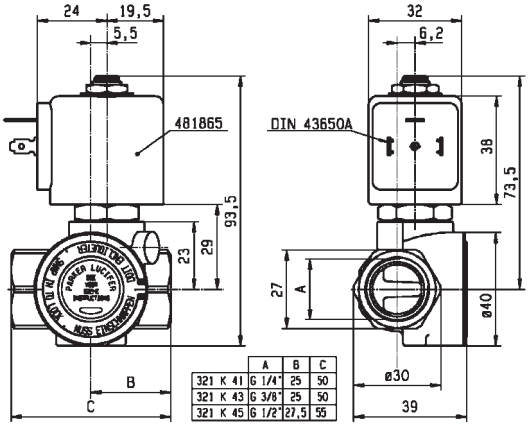

	A	B	C
321 K 41	G 1/4"	25	50
321 K 43	G 3/8"	25	50
321 K 45	G 1/2"	27,5	55

Drawing 7094

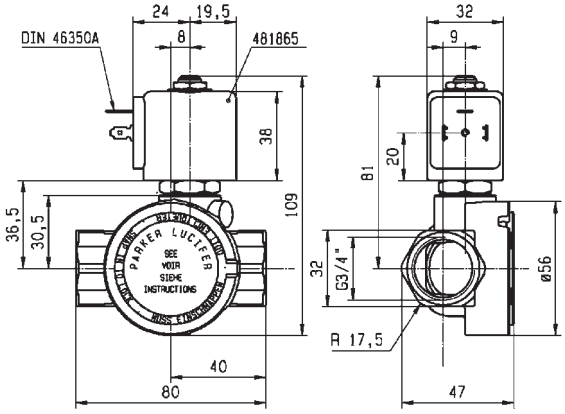

Drawing 7099

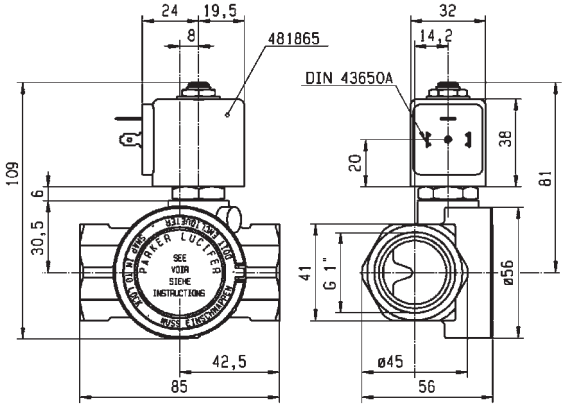

Drawing 7100

2/2 VALVES FOR DRY OR LUBRICATED AIR, NEUTRAL GASES AND LIQUIDS
PILOT OPERATED

BRASS
SUB-BASE MOUNTING
NORMALLY CLOSED

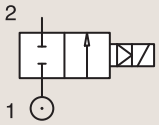

Port size	Orifice Ø	Flow factors			Operating Pressure Differential			Fluid Temp.		Seat Seal	Parker LUCIFER® Valves			Power		Coil Group	Dwg. No.
					Min	Max(MOPD)		Min	Max								
	mm	Kv l/min	KV m³/h	Qn l/min	bar	AC bar	DC bar	°C	°C		Valve Ref.	Housing Ref.	Coil Ref.	AC W	DC W		
SB	14	-	-	2100	1.5	40	40	-10	50	PUR	**321F35**	**2995**	**481865**	8	9	2.0	3520
	14	-	-	2100	1.5	40	40	-10	50	PUR	**321F35**	**2995**	**492425**	14	14	2.0	3520
	14	-	-	2100	0	13	13	-10	50	PUR	**421F35**	**2995**	**481865**	8	9	2.1	3520
	14	45	2.7	2100	0.3	40	25	-10	100	NBR	**E321F32** [2]	**2995**	**481865**	8	9	2.0	3520
	14	45	2.7	2100	0.3	40	30	-10	100	NBR	**E321F32** [2]	**4270**	**481000**	8	8	2.0	3520
	14	45	2.7	2100	0.3	40	40	-10	100	NBR	**E321F32** [2]	**4270**	**486265**	14	14	2.0	3520
	14	45	2.7	-	0.3	40	25	-10	100	FKM	**E321F3202** [1234]	**2995**	**481865**	8	9	2.0	3520
	14	45	2.7	-	0.3	40	30	-10	120	FKM	**E321F3202** [1234]	**4270**	**481000**	8	8	2.0	3520
	14	45	2.7	-	0.3	40	40	-10	140	FKM	**E321F3202** [1234]	**4270**	**486265**	14	14	2.0	3520

Notes:

1. Minimum pressure differential = 0.3 bar for opening and 0 bar for closing
2. Pilot seat disc in synthetic Ruby
3. Valve only compatible with hydraulic oil and neutral liquids
4. With 4 position selector for controlled closure rate

BRASS
SUB-BASE MOUNTING
NORMALLY OPEN

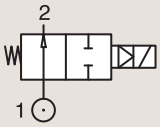

Port size	Orifice Ø	Flow factors			Operating Pressure Differential			Fluid Temp.		Seat Seal	Parker LUCIFER® Valves			Power		Coil Group	Dwg. No.
					Min	Max(MOPD)		Min	Max								
	mm	Kv l/min	KV m³/h	Qn l/min	bar	AC bar	DC bar	°C	°C		Valve Ref.	Housing Ref.	Coil Ref.	AC W	DC W		
SB	14	-	-	2100	1.5	40	40	-10	50	PUR	**322F35**	**2995**	**481865**	8	9	2.1	7527
	14	46	2.76	-	0.3	40	40	-10	75	NBR	**322F72** [124]	**2995**	**481865**	8	9	2.1	3520
	14	46	2.76	-	0.3	40	40	-10	75	NBR	**322F72** [124]	**4270**	**481000**	8	8	2.1	3520
	14	45	2.7	-	0.3	40	40	0	100	FKM	**322F7206** [1234]	**2995**	**481865**	8	9	2.1/14.1	3520
	14	45	2.7	-	0.3	40	40	0	120	FKM	**322F7206** [1234]	**4270**	**481000**	8	8	2.1/14.1	3520

Notes:

1. Minimum pressure differential = 0.3 bar for opening and 0 bar for closing
2. Pilot seat disc in synthetic Ruby
3. Valve only compatible with hydraulic oil and neutral liquids
4. With 4 position selector for controlled closure rate

For this page	Port size	Orifice (mm)	Kv (l/min)	MOPD (bar)	Fluid Temp (°C)	Amb Temp (°C)
From	14 mm	14	-	13	-10	-10
To	14 mm	14	46	40	140	50

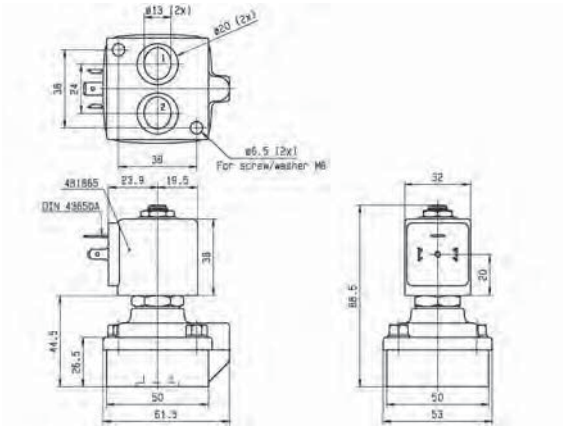

Drawing 3520

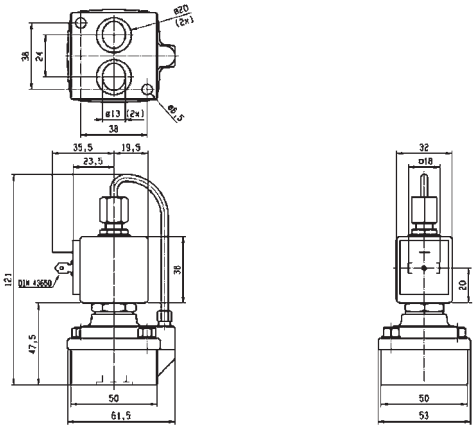

Drawing 7527

VALVES FOR WATER AND NEUTRAL LIQUIDS

Water

2/2

Actuation	Body	Function	Port Size	Orifice (mm)	Flow Factor Kv(l/min)	MOPD (bar)	Max Fluid Temp. (°C)	Page Parker Valves	Page Parker LUCIFER® Valves
Direct Operated	Brass/Pipe mounting	Normally Closed	1/8''	1.5 to 3	4.5	20	140	80	84
			1/4''	1.5 to 6	13	20	140	82	84
			3/8''	4 to 6	12	10	120	-	86
			1/2''	8.5 to 11	36	4	120	-	86
		Normally Open	1/4''	2.5	3	12	120	-	86
		Control by Electric Impulse	1/4''	5	11	5	100	-	88
	Brass/Sub-base mounting	Normally Closed	SB	2 to 2.5	3	15	140	90	-
			5 mm	1.5 to 3	4.5	20	120	-	92
Pilot Operated	Brass/Pipe mounting	Normally Closed	1/4''	11 to 12	32	12	120	-	98
			3/8''	11 to 13	50	20	140	94	98
			1/2''	11 to 13	50	20	140	94	100
			3/4''	18 to 20	140	20	140	94	102
			1''	18 to 28	270	20	140	94	104
			1 1/4''	35	420	10	140	96	-
			1 1/2''	40	500	16	140	96	104
			2''	40 to 50	620	16	140	96	104
		Normally Open	1/4''	12	32	12	120	-	108
			3/8''	12 to 13	50	20	140	106	108
			1/2''	12 to 15	60	20	140	106	108
			3/4''	18 to 20	140	20	140	106	108
			1''	18 to 25	180	20	140	106	110
			1 1/4''	35	420	10	140	106	-
			1 1/2''	40	500	12	140	106	110
			2''	50	620	10	140	106	-
			2 1/2''	65	1100	10	90	106	-
			3''	75	1334	10	90	106	-
	Brass/Sub-base mounting	Normally Closed	14 mm	14	45	40	100	-	110

2/2 VALVES FOR WATER AND NEUTRAL LIQUIDS

DIRECT OPERATED

Commercial Equipment

Beverage Dispensing

Heating Systems

BRASS
PIPE MOUNTING
NORMALLY CLOSED

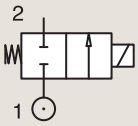

Port size	Orifice Ø	Flow factors			Operating Pressure Differential Max(MOPD)			Fluid Temp.		Seat Seal	Parker Valves			Power		Coil Group	Dwg. No.
					Min			Min	Max		Valve Order Number	Valve Type	Coil Type				
BSP	mm	Kv l/min	KV m³/h	Qn m³/h	bar	AC bar	DC bar	°C	°C					AC W	DC W		
1/8"	1.5	1.5	0.09	-	0	20	-	-10	140	FKM	**363378**	**PM146BV**	**ZB09**	9	-	20.1/20.2	034
	1.5	1.5	0.09	-	0	-	18	-10	140	FKM	**363378**	**PM146BV**	**ZB12**	-	12	20.1/20.2	034
	2.2	2	0.12	-	0	10	-	-10	140	FKM	**392349** 12	**161.4AV**	**KT09** 115/50	9	-	22.0	043
	2.2	2	0.12	-	0	10	-	-10	140	FKM	**392355** 12	**161.4AV**	**KT09** 230/50	9	-	22.0	043
	2.2	2	0.12	-	0	10	-	-10	140	FKM	**392335** 12	**161.4AV**	**KT09** 24/50	9	-	22.0	043
	2.2	2	0.12	-	0	10	-	-10	140	FKM	**392366** 12	**161.4AV**	**KT09** 240/50	9	-	22.0	043
	2.2	2	0.12	-	0	-	6	-10	140	FKM	**392372** 12	**161.4AV**	**KT10** 12 DC	-	10	22.0	043
	2.2	2	0.12	-	0	-	6	-10	140	FKM	**392370** 12	**161.4AV**	**KT10** 24 DC	-	10	22.0	043
	2.5	3.3	0.20	-	0	10	-	-10	140	FKM	**363380**	**PM146FV**	**ZB09**	9	-	20.1/20.2	034
	2.5	3.3	0.20	-	0	-	5	-10	140	FKM	**363380**	**PM146FV**	**ZB12**	-	12	20.1/20.2	034
	2.8	2.9	0.17	-	0	6	-	-10	140	FKM	**392389** 12	**161.4BV**	**KT09** 115/60	9	-	22.0	043
	2.8	2.9	0.17	-	0	6	-	-10	140	FKM	**392388** 12	**161.4BV**	**KT09** 230/50	9	-	22.0	043
	3	4.5	0.27	-	0	7	-	-10	140	FKM	**363390**	**PM146HV**	**ZB09**	9	-	20.1/20.2	034
	3	4.5	0.27	-	0	-	2	-10	140	FKM	**363390**	**PM146HV**	**ZB12**	-	12	20.1/20.2	034

Notes:

1. Maximum pressure for steam: 4 Bar (140°C)
2. Ordering number is for an assembled valve and coil, with the voltage shown.

For this page	Port size	Orifice (mm)	Kv (l/min)	MOPD (bar)	Fluid Temp (°C)	Amb Temp (°C)
From	1/8''	1.5	1.5	2	-10	-10
To	1/8''	3	4.5	20	140	50

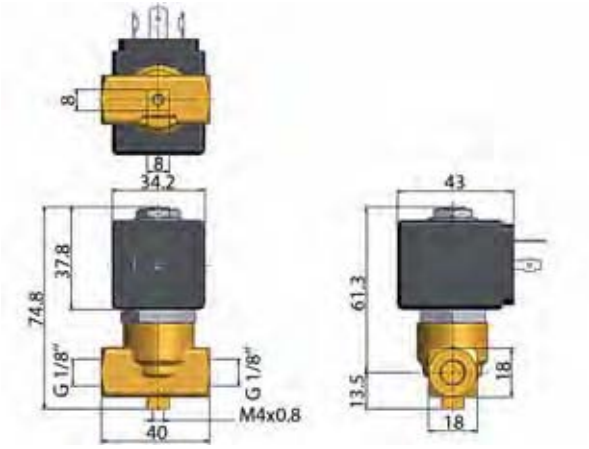

Drawing 034

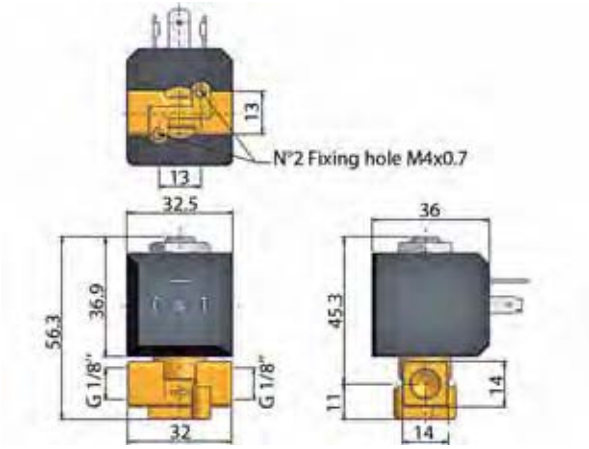

Drawing 043

2/2 VALVES FOR WATER AND NEUTRAL LIQUIDS

DIRECT OPERATED

BRASS
PIPE MOUNTING
NORMALLY CLOSED

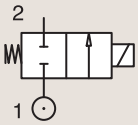

Port size	Orifice Ø	Flow factors			Operating Pressure Differential			Fluid Temp.		Seat Seal	Parker Valves			Power		Coil Group	Dwg. No.
					Min	Max(MOPD)		Min	Max		Valve Order Number	Valve Type	Coil Type				
BSP	mm	Kv l/min	KV m³/h	Qn m³/h	bar	AC bar	DC bar	°C	°C					AC W	DC W		
1/4"	2.2	2	0.12	-	0	10	-	-10	140	FKM	**392408** 12	**161.4EV**	**KT09** 115/50	9	-	22.0	044
	2.2	2	0.12	-	0	10	-	-10	140	FKM	**392408** 12	**161.4EV**	**KT09** 115/60	9	-	22.0	044
	2.2	2	0.12	-	0	10	-	-10	140	FKM	**392409** 12	**161.4EV**	**KT09** 208-230/60	9	-	22.0	044
	2.2	2	0.12	-	0	10	-	-10	140	FKM	**392395** 12	**161.4EV**	**KT09** 230/50	9	-	22.0	044
	2.2	2	0.12	-	0	10	-	-10	140	FKM	**392173** 12	**161.4EV**	**KT09** 24/50	9	-	22.0	044
	2.2	2	0.12	-	0	10	-	-10	140	FKM	**392396** 12	**161.4EV**	**KT09** 240/50	9	-	22.0	044
	2.2	2	0.12	-	0	-	6	-10	140	FKM	**392170** 12	**161.4EV**	**KT10** 12V DC	-	10	22.0	044
	2.2	2	0.12	-	0	-	6	-10	140	FKM	**392169** 12	**161.4EV**	**KT10** 24 DC	-	10	22.0	044
	3	4.5	0.27	-	0	7	-	-10	140	FKM	**363444**	**PM146YV**	**ZB09**	9	-	20.1/20.2	035
	3	4.5	0.27	-	0	-	2	-10	140	FKM	**363444**	**PM146YV**	**ZB12**	-	12	20.1/20.2	035
	4.5	9	0.53	-	0	6	-	-10	140	FKM	**363457**	**PM146.3KV**	**ZB14**	14	-	20.2	035
	4.5	9	0.53	-	0	-	2.5	-10	140	FKM	**363457**	**PM146.3KV**	**ZB16**	-	16	20.2	035
	6	13	0.75	-	0	6	-	-10	140	FKM	**363467**	**PM146.3ABV**	**ZB14**	14	-	20.2	035
	6	13	0.75	-	0	-	1	-10	140	FKM	**363467**	**PM146.3ABV**	**ZB16**	-	16	20.2	035

Notes:

1. Maximum pressure for steam: 4 Bar (140°C)
2. Ordering number is for an assembled valve and coil, with the voltage shown.

For this page	Port size	Orifice (mm)	Kv (l/min)	MOPD (bar)	Fluid Temp (°C)	Amb Temp (°C)
From	1/4''	2.2	2	1	-10	-10
To	1/4''	6	13	10	140	50

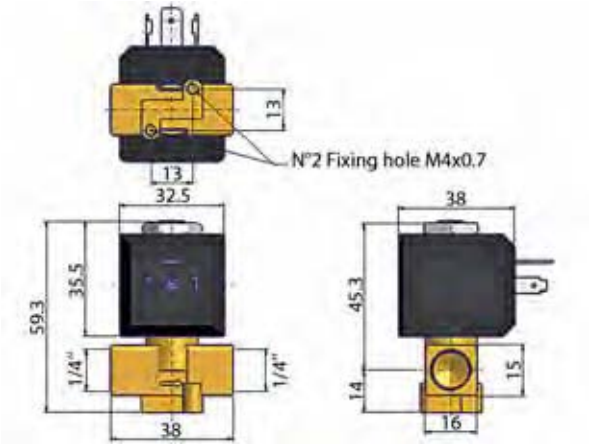

Drawing 044

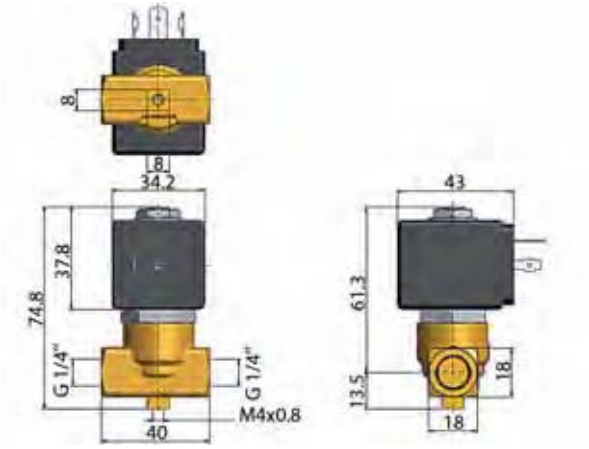

Drawing 035

2/2 VALVES FOR WATER AND NEUTRAL LIQUIDS

DIRECT OPERATED

BRASS
PIPE MOUNTING
NORMALLY CLOSED

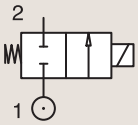

Port size	Orifice Ø	Flow factors			Operating Pressure Differential			Fluid Temp.		Seat Seal	Parker LUCIFER® Valves			Power		Coil Group	Dwg. No.
					Min	Max(MOPD)		Min	Max								
BSP	mm	Kv l/min	KV m³/h	Qn l/min	bar	AC bar	DC bar	°C	°C		Valve Ref.	Housing Ref.	Coil Ref.	AC W	DC W		
1/8"	1.5	0.9	0.05	70	0	20	12	-10	75	FKM	**121M14**	**8993**	**481180**	4	5	1.1	3382
	1.5	0.9	0.05	70	0	20	4	-10	75	FKM	**121M14**	**8993**	**488980**	2	2.5	1.1	3382
	2	2	0.12	125	0	10	7	-10	75	FKM	**121M13**	**8993**	**481180**	4	5	1.1	3382
	2	2	0.12	125	0	10	2.5	-10	75	FKM	**121M13**	**8993**	**488980**	2	2.5	1.1	3382
1/4"	1.5	1.5	0.09	80	0	20	20	-10	100	FKM	**E121K0402**	**2995**	**481865**	8	9	2.0/3.0	3510
	1.5	1.5	0.09	80	0	20	20	-10	120	FKM	**E121K0402**	**4270**	**481000**	8	8	2.0/3.0	3510
	2.5	3.5	0.21	220	0	14	7	-10	100	FKM	**121K0706**	**2995**	**481865**	8	9	2.0	3510
	2.5	3.5	0.21	220	0	14	9	-10	120	FKM	**121K0706**	**4270**	**481000**	8	8	2.0	3510
	2.5	3.5	0.21	220	0	14	14	-10	120	FKM	**121K0706**	**4270**	**486265**	14	14	2.0	3510
	3	4.5	0.27	320	0	10	7	-10	100	FKM	**E121K0302**	**2995**	**481865**	8	9	2.0	3510
	3	4.5	0.27	320	0	10	8.5	-10	120	FKM	**E121K0302**	**4270**	**481000**	8	8	2.0	3510
	3	4.5	0.27	320	0	10	7	-10	100	FKM	**E121K0302**	**4270**	**486265**	14	14	2.0	3510
	3	4.5	0.27	320	0	10	7	-10	100	FKM	**E121K0352** [1]	**2995**	**481865**	8	9	2.0	3510
	3	4.5	0.27	320	0	10	8.5	-10	120	FKM	**E121K0352** [1]	**4270**	**481000**	8	8	2.0	3510
	3	4.5	0.27	320	0	10	10	-10	120	FKM	**E121K0352** [1]	**4270**	**486265**	14	14	2.0	3510
	4	7.5	0.45	480	0	10	4	-10	100	FKM	**121K02**	**2995**	**481865**	8	9	2.0	3510
	4	7.5	0.45	480	0	10	5	-10	120	FKM	**121K02**	**4270**	**481000**	8	8	2.0	3510
	4	7.5	0.45	480	0	10	10	-10	120	FKM	**121K02**	**4270**	**486265**	14	14	2.0	3510
	4	7.5	0.45	480	0	10	4	-10	100	FKM	**121K0250** [1]	**2995**	**481865**	8	9	2.0	3510
	4	7.5	0.45	480	0	10	5	-10	120	FKM	**121K0250** [1]	**4270**	**481000**	8	8	2.0	3510
	4	7.5	0.45	480	0	10	10	-10	120	FKM	**121K0250** [1]	**4270**	**486265**	14	14	2.0	3510
	5	11	0.66	750	0	7	2	-10	100	FKM	**121K01**	**2995**	**481865**	8	9	2.0/14.2	3510
	5	11	0.66	750	0	7	2.8	-10	120	FKM	**121K01**	**4270**	**481000**	8	8	2.0/14.2	3510
	5	11	0.66	750	0	7	5	-10	120	FKM	**121K01**	**4270**	**486265**	14	14	2.0/14.2	3510
	5	11	0.66	750	0	7	2	-10	100	FKM	**121K0106**	**2995**	**481865**	8	9	2.0	3510
	5	11	0.66	750	0	7	2.8	-10	120	FKM	**121K0106**	**4270**	**481000**	8	8	2.0	3510
	5	11	0.66	750	0	7	5	-10	120	FKM	**121K0106**	**4270**	**486265**	14	14	2.0	3510
	5	11	0.66	750	0	7	2	-10	100	FKM	**121K0150** [1]	**2995**	**481865**	8	9	2.0	3510
	5	11	0.66	750	0	7	2.8	-10	120	FKM	**121K0150** [1]	**4270**	**481000**	8	8	2.0	3510
	5	11	0.66	750	0	7	5	-10	120	FKM	**121K0150** [1]	**4270**	**486265**	14	14	2.0	3510

Notes:

1. With manual override

For this page	Port size	Orifice (mm)	Kv (l/min)	MOPD (bar)	Fluid Temp (°C)	Amb Temp (°C)
From	1/8"	1.5	0.9	2	-10	-10
To	1/4"	5	11	20	120	50

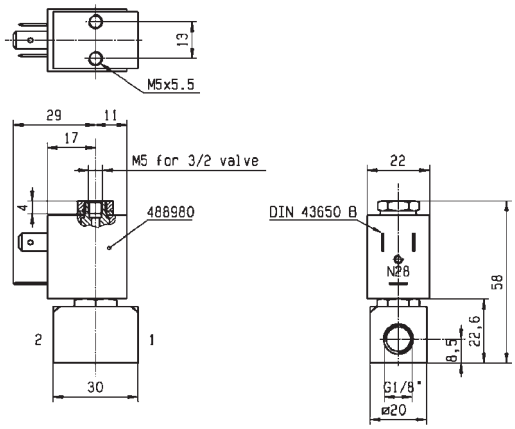

Drawing 3382

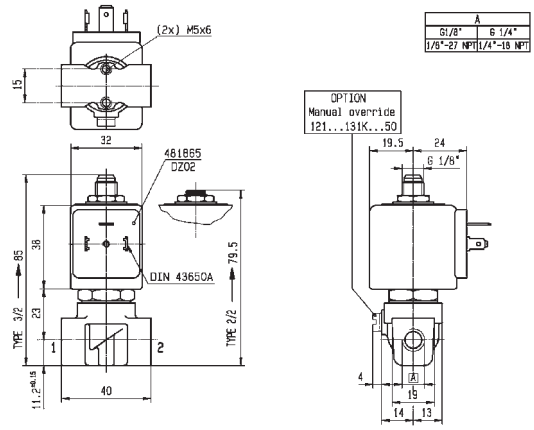

Drawing 3510

2/2 VALVES FOR WATER AND NEUTRAL LIQUIDS

DIRECT OPERATED

BRASS
PIPE MOUNTING
NORMALLY CLOSED

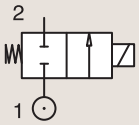

Port size	Orifice Ø	Flow factors			Operating Pressure Differential			Fluid Temp.		Seat Seal	Parker LUCIFER® Valves			Power		Coil Group	Dwg. No.
					Min	Max(MOPD)		Min	Max								
BSP	mm	Kv l/min	KV m³/h	Qn l/min	bar	AC bar	DC bar	°C	°C		Valve Ref.	Housing Ref.	Coil Ref.	AC W	DC W		
3/8"	4	7.5	0.45	480	0	10	4	-10	100	FKM	121K3206	2995	481865	8	9	2.0	3551
	4	7.5	0.45	480	0	10	5	-10	120	FKM	121K3206	4270	481000	8	8	2.0	3551
	4	7.5	0.45	480	0	10	10	-10	120	FKM	121K3206	4270	486265	14	14	2.0	3551
	5	11	0.66	750	0	7	2	-10	100	FKM	121K3106	2995	481865	8	9	2.0	3551
	5	11	0.66	750	0	7	2.8	-10	120	FKM	121K3106	4270	481000	8	8	2.0	3551
	5	11	0.66	750	0	7	5	-10	120	FKM	121K3106	4270	486265	14	14	2.0	3551
	6	12	0.72	1100	0	5	1.1	-10	100	FKM	121K3306	2995	481865	8	9	2.0/14.2	3551
	6	12	0.72	1100	0	5	1.5	-10	120	FKM	121K3306	4270	481000	8	8	2.0/14.2	3551
	6	12	0.72	1100	0	5	3	-10	120	FKM	121K3306	4270	486265	14	14	2.0/14.2	3551
1/2"	8.5	25	1.5	1600	0	1.1	0.5	-10	100	FKM	E121K46	2995	481865	8	9	2.0	3427
	8.5	25	1.5	1600	0	2.2	0.5	-10	120	FKM	E121K46	4270	481000	8	8	2.0	3427
	8.5	25	1.5	1600	0	4	1.2	-10	120	FKM	E121K46	4270	486265	14	14	2.0	3427
	11	36	2.16	2500	0	0.7	0.3	-10	100	FKM	E121K45	2995	481865	8	9	2.0	3427
	11	36	2.16	2500	0	1.2	0.35	-10	120	FKM	E121K45	4270	481000	8	8	2.0	3427
	11	36	2.16	2500	0	2.5	0.7	-10	120	FKM	E121K45	4270	486265	14	14	2.0	3427

BRASS
PIPE MOUNTING
NORMALLY OPEN

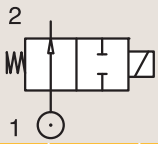

Port size	Orifice Ø	Flow factors			Operating Pressure Differential			Fluid Temp.		Seat Seal	Parker LUCIFER® Valves			Power		Coil Group	Dwg. No.
					Min	Max(MOPD)		Min	Max								
BSP	mm	Kv l/min	KV m³/h	Qn l/min	bar	AC bar	DC bar	°C	°C		Valve Ref.	Housing Ref.	Coil Ref.	AC W	DC W		
1/4"	2.5	3	0.18	180	0	12	12	-10	100	FKM	122K8306	2995	481865	8	9	2.0	3510
	2.5	3	0.18	180	0	12	12	-10	120	FKM	122K8306	4270	481000	8	8	2.0	3510
	2.5	3	0.18	180	0	12	12	-10	120	FKM	122K8306	4270	486265	14	14	2.0	3510

For this page	Port size	Orifice (mm)	Kv (l/min)	MOPD (bar)	Fluid Temp (°C)	Amb Temp (°C)
From	1/4"	2.5	3	0.3	-10	-10
To	1/2"	11	36	12	120	50

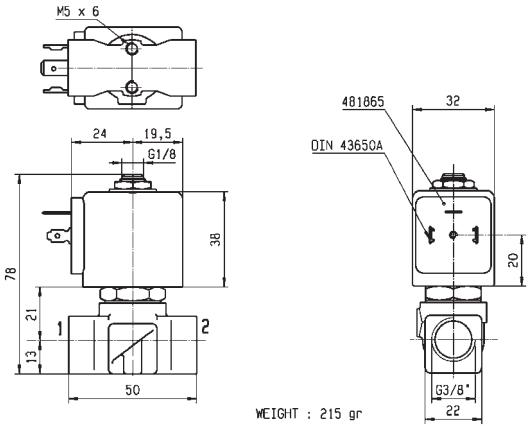

Drawing 3551

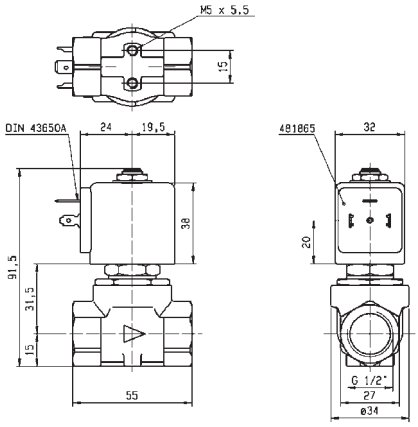

Drawing 3427

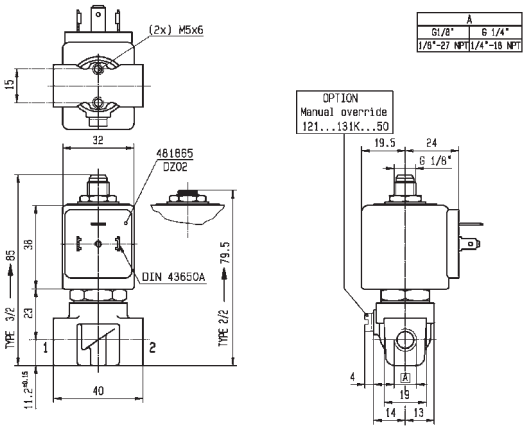

Drawing 3510

2/2 VALVES FOR WATER AND NEUTRAL LIQUIDS

DIRECT OPERATED

BRASS
PIPE MOUNTING
CONTROL BY ELECTRIC IMPULSE

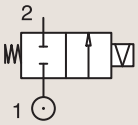

Port size	Orifice Ø	Flow factors			Operating Pressure Differential			Fluid Temp.		Seat Seal	Parker LUCIFER® Valves			Power		Coil Group	Dwg. No.
					Min	Max(MOPD)		Min	Max								
BSP	mm	Kv l/min	KV m³/h	Qn l/min	bar	AC bar	DC bar	°C	°C		Valve Ref.	Housing Ref.	Coil Ref.	AC W	DC W		
1/4''	5	11	0.66	750	0	5	-	-10	100	FKM	**125K01**	**4269**	**484990**	11	-	4.0	8296
	5	11	0.66	750	0	-	1.5	-10	100	FKM	**125K01**	**4269**	**485400**	-	13	4.0	8296

For this page	Port size	Orifice (mm)	Kv (l/min)	MOPD (bar)	Fluid Temp (°C)	Amb Temp (°C)
From	1/4"	5	11	1.5	-10	-10
To	1/4"	5	11	1.5	100	50

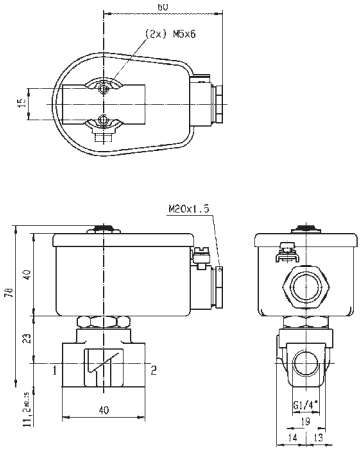

Drawing 8296

2/2 VALVES FOR WATER AND NEUTRAL LIQUIDS

DIRECT OPERATED

BRASS

SUB-BASE MOUNTING

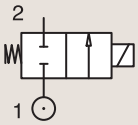

NORMALLY CLOSED

Port size	Orifice Ø	Flow factors			Operating Pressure Differential			Fluid Temp.		Seat Seal	Parker Valves			Power		Coil Group	Dwg. No.
					Min	Max(MOPD)		Min	Max		Valve Order Number	Valve Type	Coil Type				
	mm	Kv l/min	KV m³/h	Qn m³/h	bar	AC bar	DC bar	°C	°C					AC W	DC W		
SB	2	2	0.12	-	0	15	-	-10	140	FKM	**360469**	**PM125BV**	**ZB09**	9	-	20.1/20.2	007
	2.5	3	0.18	-	0	10	-	-10	140	FKM	**397146J**	**PM125CV.2**	**ZB09**	9	-	20.1/20.2	007

For this page	Port size	Orifice (mm)	Kv (l/min)	MOPD (bar)	Fluid Temp (°C)	Amb Temp (°C)
From	SB	2	2	10	-10	-10
To	SB	2.5	3	15	140	50

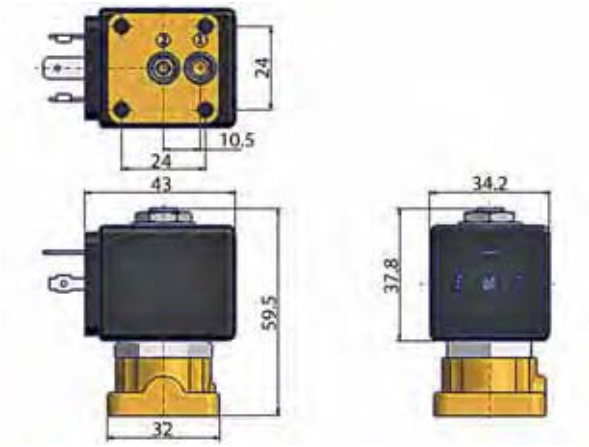

Drawing 007

2/2 VALVES FOR WATER AND NEUTRAL LIQUIDS

DIRECT OPERATED

BRASS
SUB-BASE MOUNTING
NORMALLY CLOSED

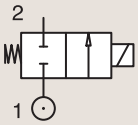

Port size	Orifice Ø	Flow factors			Operating Pressure Differential			Fluid Temp.		Seat Seal	Parker LUCIFER® Valves			Power		Coil Group	Dwg. No.
					Min	Max(MOPD)		Min	Max								
	mm	Kv l/min	KV m³/h	Qn l/min	bar	AC bar	DC bar	°C	°C		Valve Ref.	Housing Ref.	Coil Ref.	AC W	DC W		
SB	1.5	1.5	0.09	80	0	20	20	-10	100	FKM	**E121F4406**	**2995**	**481865**	8	9	2.0	3509
	1.5	1.5	0.09	80	0	20	20	-10	120	FKM	**E121F4406**	**4270**	**481000**	8	8	2.0	3509
	1.5	1.5	0.09	80	0	20	20	-10	120	FKM	**E121F4406**	**4270**	**486265**	14	14	2.0	3509
	3	4.5	0.27	320	0	10	7	-10	100	FKM	**E121F4302**	**2995**	**481865**	8	9	2.0/3.0	3509
	3	4.5	0.27	320	0	10	8.5	-10	120	FKM	**E121F4302**	**4270**	**481000**	8	8	2.0/3.0	3509
	3	4.5	0.27	320	0	10	10	-10	120	FKM	**E121F4302**	**4270**	**486265**	14	14	2.0/3.0	3509

For this page	Port size	Orifice (mm)	Kv (l/min)	MOPD (bar)	Fluid Temp (°C)	Amb Temp (°C)
From	5 mm	1.5	1.5	7	-10	-10
To	5 mm	3	4.5	20	120	50

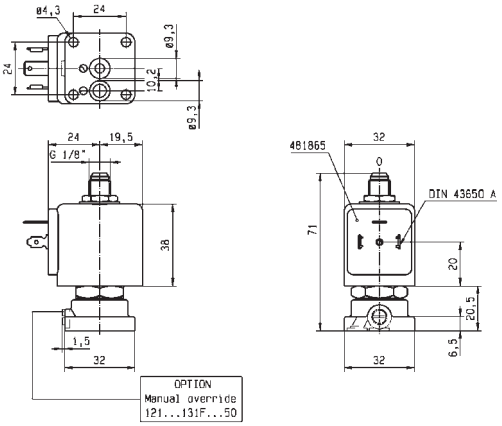

Drawing 3509

2/2 VALVES FOR WATER AND NEUTRAL LIQUIDS

PILOT OPERATED

Commercial Equipment

Industrial Equipment

Medical / Instrumentation

BRASS
PIPE MOUNTING
NORMALLY CLOSED

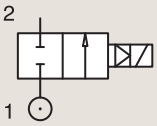

Port size	Orifice Ø	Flow factors			Operating Pressure Differential			Fluid Temp.		Seat Seal	Parker Valves			Power		Coil Group	Dwg. No.
					Min	Max(MOPD)		Min	Max		Valve Order Number	Valve Type	Coil Type				
BSP	mm	Kv l/min	KV m³/h	Qn m³/h	bar	AC bar	DC bar	°C	°C					AC W	DC W		
3/8"	13	50	3	-	0.1	10	10	-10	140	EPDM	443778W[1]	7321BIH00	481865	8	9	2.0	028
	13	50	3	-	0.1	20	20	-10	90	NBR	443776W	7321BIN00	481865	8	9	2.0	028
	13	50	3	-	0.1	20	20	-10	90	NBR	443777W[2]	7321BIN01	481865	8	9	2.0	028
	13	50	3	-	0.1	20	20	-10	140	FKM	444492W	7321BIV00	481865	8	9	2.0	028
1/2"	13	50	3	-	0.1	10	10	-10	140	EPDM	443781W[1]	7321BAH00	481865	8	9	2.0	028
	13	50	3	-	0.1	20	20	-10	90	NBR	443779W	7321BAN00	481865	8	9	2.0	028
	13	50	3	-	0.1	20	20	-10	90	NBR	443780W[2]	7321BAN01	481865	8	9	2.0	028
	13	50	3	-	0.1	20	20	-10	140	FKM	444494W	7321BAV00	481865	8	9	2.0	028
3/4"	20	140	8.4	-	0.1	10	10	-10	140	EPDM	443785W[1]	7321BCH00	481865	8	9	2.0	057
	20	140	8.4	-	0.1	20	20	-10	90	NBR	443782W	7321BCN00	481865	8	9	2.0	057
	20	140	8.4	-	0.1	10	10	-10	90	NBR	443783W[2]	7321BCN01	481865	8	9	2.0	057
	20	140	8.4	-	0.1	20	20	-10	140	FKM	444497W	7321BCV00	481865	8	9	2.0	057
1"	25	160	9.6	-	0.1	10	10	-10	140	EPDM	443789W[1]	7321BDH00	481865	8	9	2.0	057
	25	160	9.6	-	0.1	20	20	-10	90	NBR	443786W	7321BDN00	481865	8	9	2.0	057
	25	160	9.6	-	0.1	10	10	-10	90	NBR	443787W[2]	7321BDN01	481865	8	9	2.0	057
	25	160	9.6	-	0.1	20	20	-10	140	FKM	443804W	7321BDV00	481865	8	9	2.0	057

Notes:

1. Maximum pressure for steam: 4 Bar (140°C)
2. With manual override

For this page	Port size	Orifice (mm)	Kv (l/min)	MOPD (bar)	Fluid Temp (°C)	Amb Temp (°C)
From	3/8''	13	50	10	-10	-10
To	1''	25	160	20	140	50

G	A		B		C	
NPT	mm	inch	mm	inch	mm	inch
3/8"	89	3.11	99.5	3.91	40	1.57
1/2"	72	2.83	101.3	3.99	40	1.57

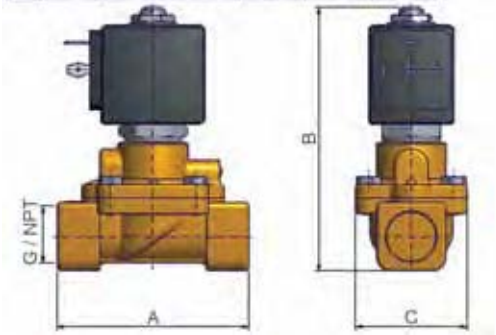

Drawing 028

G	A		B		C	
NPT	mm	inch	mm	inch	mm	inch
3/4"	103	3.83	107	4.21	65	2.55
1"	104	4.09	112.3	4.42	65	2.55

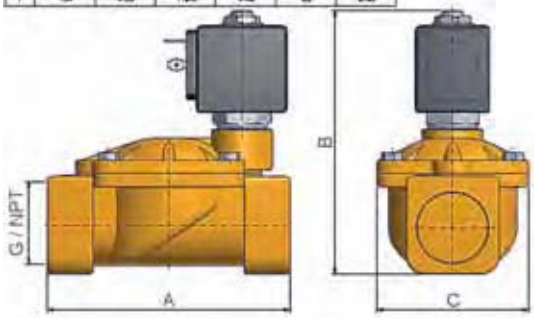

Drawing 057

2/2 VALVES FOR WATER AND NEUTRAL LIQUIDS

PILOT OPERATED

BRASS
PIPE MOUNTING
NORMALLY CLOSED

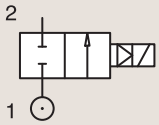

Port size	Orifice Ø	Flow factors			Operating Pressure Differential			Fluid Temp.		Seat Seal	Parker Valves			Power		Coil Group	Dwg. No.
					Min	Max(MOPD)		Min	Max		Valve Order Number	Valve Type	Coil Type				
BSP	mm	Kv l/min	KV m³/h	Qn m³/h	bar	AC bar	DC bar	°C	°C					AC W	DC W		
1 1/4"	35	420	25.2	-	0.1	10	10	-10	140	EPDM	**443793W** [1]	**7321BEH00**	**481865**	8	9	2.0	058
	35	420	25.2	-	0.1	10	10	-10	90	NBR	**443790W**	**7321BEN00**	**481865**	8	9	2.0	058
	35	420	25.2	-	0.1	5	5	-10	90	NBR	**443791W** [2]	**7321BEN01**	**481865**	8	9	2.0	058
1 1/2"	40	500	30	-	0.1	10	10	-10	140	EPDM	**443797W** [1]	**7321BFH00**	**481865**	8	9	2.0	058
	40	500	30	-	0.1	10	10	-10	90	NBR	**443794W**	**7321BFN00**	**481865**	8	9	2.0	058
	40	500	30	-	0.1	5	5	-10	90	NBR	**443795W** [2]	**7321BFN01**	**481865**	8	9	2.0	058
2"	50	620	37.2	-	0.1	10	10	-10	140	EPDM	**443801W** [1]	**7321BGH00**	**481865**	8	9	2.0	058
	50	620	37.2	-	0.1	10	10	-10	90	NBR	**443798W**	**7321BGN00**	**481865**	8	9	2.0	058
	50	620	37.2	-	0.1	5	5	-10	90	NBR	**443799W** [2]	**7321BGN01**	**481865**	8	9	2.0	058

Notes:

1. Maximum pressure for steam: 4 Bar (140°C)
2. With manual override

For this page	Port size	Orifice (mm)	Kv (l/min)	MOPD (bar)	Fluid Temp (°C)	Amb Temp (°C)
From	1 1/4''	35	420	5	-10	-10
To	2''	50	620	10	140	50

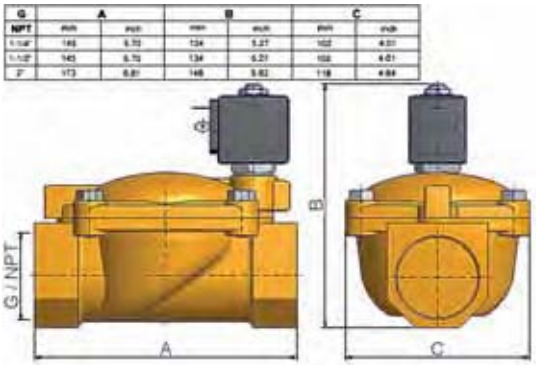

Drawing 058

2/2 VALVES FOR WATER AND NEUTRAL LIQUIDS

PILOT OPERATED

BRASS
PIPE MOUNTING
NORMALLY CLOSED

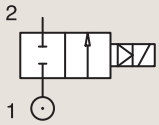

Port size	Orifice Ø	Flow factors			Operating Pressure Differential			Fluid Temp.		Seat Seal	Parker LUCIFER® Valves			Power		Coil Group	Dwg. No.
					Min	Max(MOPD)		Min	Max		Valve Ref.	Housing Ref.	Coil Ref.				
BSP	mm	Kv l/min	KV m³/h	Qn l/min	bar	AC bar	DC bar	°C	°C					AC W	DC W		
1/4"	11	28	1.68	1800	0.2	10	3	-10	100	NBR	**E321K10**	**2995**	**481865**	8	9	2.0	3429
	11	28	1.68	1800	0.2	10	4	-10	100	NBR	**E321K10**	**4270**	**481000**	8	8	2.0	3429
	12	30	1.8	2150	0.3	10	10	-10	100	NBR	**321K31**	**8993**	**481180**	4	5	1.1	7093
	12	30	1.8	2150	0.3	10	7	-10	75	NBR	**321K31**	**8993**	**488980**	2	2.5	1.1	7093
	12	32	1.92	2150	0.3	12	12	-10	100	FKM	**321K4106**	**2995**	**481865**	8	9	2.1/3.0	7094
	12	32	1.92	2150	0.3	12	12	-10	120	FKM	**321K4106**	**4270**	**481000**	8	8	2.1/3.0	7094
3/8"	11	36	2.16	2500	0.2	10	4	-10	100	NBR	**E321K13**	**4270**	**481000**	8	8	2.0	3429
	11	36	2.16	2500	0.2	10	10	-10	100	NBR	**E321K13**	**4270**	**486265**	14	14	2.0	3429
	11	36	2.16	2500	0.2	10	-	-10	100	NBR	**E321K1314**	**2995**	**483466**	8 to 11	-	2.0	3429
	11	36	2.16	2500	0.2	10	10	-10	100	NBR	**E321K1314**	**4270**	**486265**	14	14	2.0	3429
	12	45	2.7	3050	0.3	10	10	-10	100	NBR	**321K33**	**8993**	**481180**	4	5	1.1	7093
	12	45	2.7	3050	0.3	10	7	-10	75	NBR	**321K33**	**8993**	**488980**	2	2.5	1.1	7093
	12	45	2.7	3050	0.3	12	12	-10	100	FKM	**321K4306**	**2995**	**481865**	8	9	2.1/3.0	7094
	12	45	2.7	3050	0.3	12	12	-10	120	FKM	**321K4306**	**4270**	**481000**	8	8	2.1/3.0	7094

For this page	Port size	Orifice (mm)	Kv (l/min)	MOPD (bar)	Fluid Temp (°C)	Amb Temp (°C)
From	1/4"	11	28	3	-10	-10
To	3/8"	12	45	12	120	50

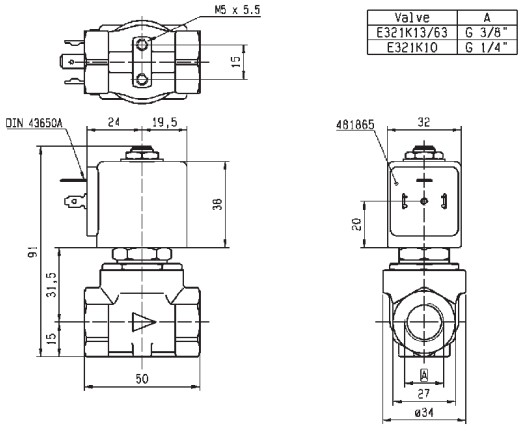

Valve	A
E321K13/63	G 3/8"
E321K10	G 1/4"

Drawing 3429

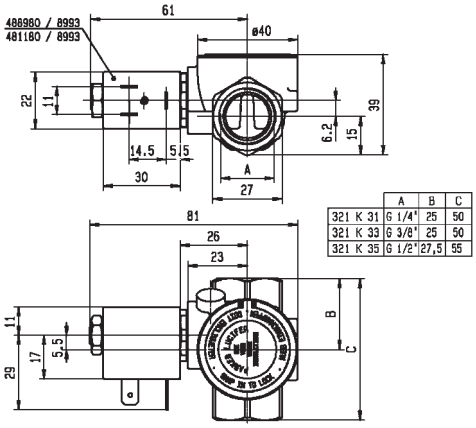

	A	B	C
321 K 31	G 1/4"	25	50
321 K 33	G 3/8"	25	50
321 K 35	G 1/2"	27,5	55

Drawing 7093

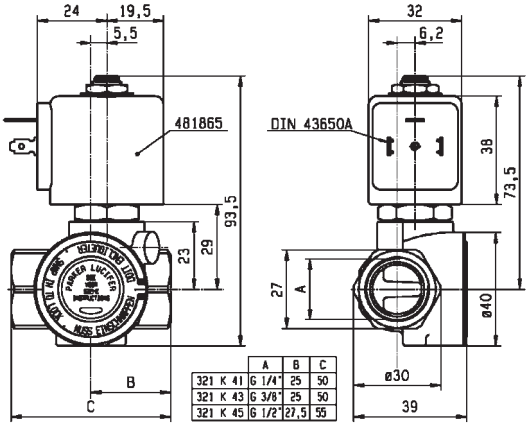

	A	B	C
321 K 41	G 1/4"	25	50
321 K 43	G 3/8"	25	50
321 K 45	G 1/2"	27,5	55

Drawing 7094

2/2 VALVES FOR WATER AND NEUTRAL LIQUIDS

PILOT OPERATED

BRASS
PIPE MOUNTING
NORMALLY CLOSED

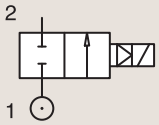

Port size	Orifice Ø	Flow factors			Operating Pressure Differential			Fluid Temp.		Seat Seal	Parker LUCIFER® Valves			Power		Coil Group	Dwg. No.
					Min	Max(MOPD)		Min	Max								
BSP	mm	Kv l/min	KV m³/h	Qn l/min	bar	AC bar	DC bar	°C	°C		Valve Ref.	Housing Ref.	Coil Ref.	AC W	DC W		
1/2"	11	36	2.16	2500	0.2	10	3	-10	100	NBR	**E321K15**	**2995**	**481865**	8	9	2.0	3427
	11	36	2.16	2500	0.2	10	10	-10	120	NBR	**E321K15**	**4270**	**486265**	14	14	2.0	3427
	11	36	2.16	2500	0.2	10	3	-10	100	NBR	**E321K1514**	**2995**	**481865**	8	9	2.0	3427
	11	36	2.16	2500	0.2	10	4	-10	120	NBR	**E321K1514**	**-**	**483371**	8	8	2.0	3427
	11	36	2.16	2500	0.2	10	3	-10	100	NBR	**E321K25**	**2995**	**481865**	8	9	2.0	3427
	11	36	2.16	2500	0.2	4	4	-10	120	NBR	**E321K25**	**-**	**492070**	9	8	2.0	3427
	12	50	3	3400	0.3	10	10	-10	100	NBR	**321K35**	**8993**	**481180**	4	5	1.1	7093
	12	50	3	3400	0.3	10	7	-10	75	NBR	**321K35**	**8993**	**488980**	2	2.5	1.1	7093
	12	50	3	3400	0.3	12	12	-10	100	FKM	**321K4506**	**2995**	**481865**	8	9	2.1/3.0	7094
	12	50	3	3400	0.3	12	12	-10	120	FKM	**321K4506**	**4270**	**481000**	8	8	2.1/3.0	7094
	12	50	3	3400	0.3	12	12	-10	100	FKM	**321K4556** [1]	**2995**	**481865**	8	9	2.1/3.0	7094
	12	50	3	3400	0.3	12	12	-10	120	FKM	**321K4556** [1]	**4270**	**481000**	8	8	2.1/3.0	7094

Notes:

1. With manual override

For this page	Port size	Orifice (mm)	Kv (l/min)	MOPD (bar)	Fluid Temp (°C)	Amb Temp (°C)
From	1/2"	11	36	3	-10	-10
To	1/2"	12	50	12	120	50

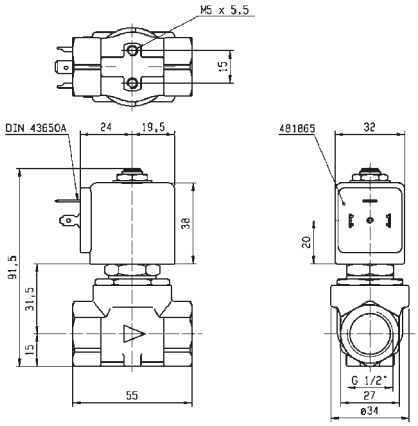

Drawing 3427

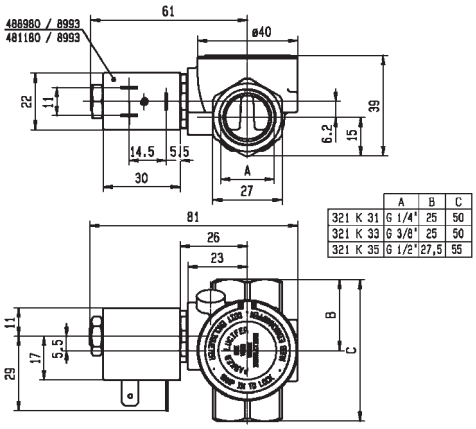

	A	B	C
321 K 31	G 1/4"	25	50
321 K 33	G 3/8"	25	50
321 K 35	G 1/2"	27,5	55

Drawing 7093

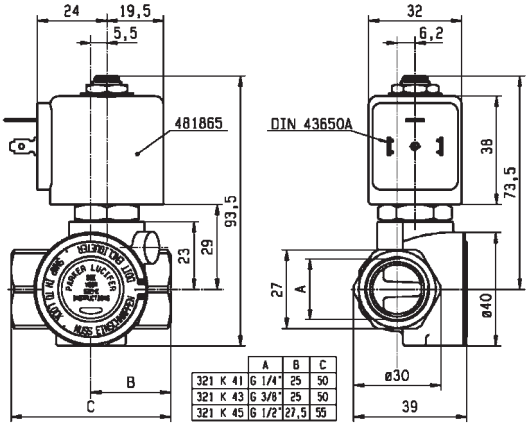

	A	B	C
321 K 41	G 1/4"	25	50
321 K 43	G 3/8"	25	50
321 K 45	G 1/2"	27,5	55

Drawing 7094

2/2 VALVES FOR WATER AND NEUTRAL LIQUIDS

PILOT OPERATED

BRASS
PIPE MOUNTING
NORMALLY CLOSED

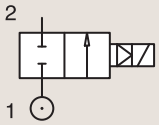

Port size	Orifice Ø	Flow factors			Operating Pressure Differential			Fluid Temp.		Seat Seal	Parker LUCIFER® Valves			Power		Coil Group	Dwg. No.
					Min	Max(MOPD)		Min	Max								
BSP	mm	Kv l/min	KV m³/h	Qn l/min	bar	AC bar	DC bar	°C	°C		Valve Ref.	Housing Ref.	Coil Ref.	AC W	DC W		
3/4"	18	100	6	9400	0.3	10	10	-10	100	NBR	**321K36**	**8993**	**481180**	4	5	1.1	7097
	18	100	6	9400	0.3	10	7	-10	75	NBR	**321K36**	**8993**	**488980**	2	2.5	1.1	7097
	18	100	6	9400	0.3	12	12	-10	100	FKM	**321K4606**	**2995**	**481865**	8	9	2.1/3.0	7099
	18	100	6	9400	0.3	12	12	-10	120	FKM	**321K4606**	**4270**	**481000**	8	8	2.1/3.0	7099
	18	100	6	9400	0.3	12	12	-10	100	FKM	**321K4656** [1]	**2995**	**481865**	8	9	2.1/3.0	7099
	18	100	6	9400	0.3	12	12	-10	120	FKM	**321K4656** [1]	**4270**	**481000**	8	8	2.1/3.0	7099
	20	135	8.1	9500	0.3	16	16	-10	100	NBR	**E321G36**	**2995**	**481865**	8	9	2.0	3442
	20	135	8.1	9500	0.3	16	16	-10	100	NBR	**E321G36**	**4270**	**481000**	8	8	2.0	3442

Notes:

1. With manual override

For this page	Port size	Orifice (mm)	Kv (l/min)	MOPD (bar)	Fluid Temp (°C)	Amb Temp (°C)
From	3/4"	18	100	7	-10	-10
To	3/4"	20	135	16	120	50

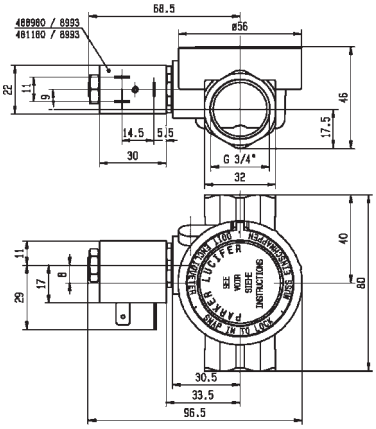

Drawing 7097

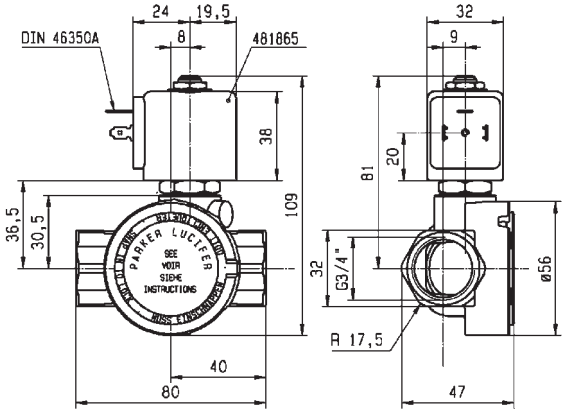

Drawing 7099

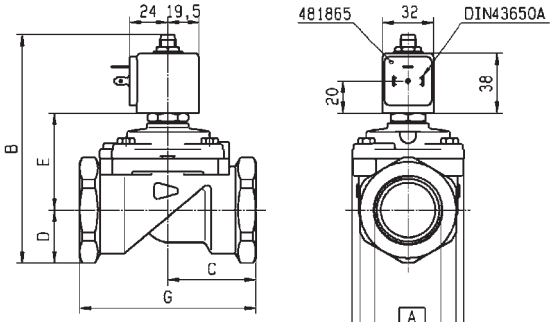

	RACCORD A	B	C	D	E	F	G	H
321/322/E321G36..	BSP 3/4"	121	50	23	54	41	100	70
321/322/E321G37..	BSP 1"	121	50	23	54	41	100	70
321/322/E321G38..	BSP 1 1/4"	137.5	55	33	60.5	60	110	70
321/322/E321G39..	BSP 1 1/2"	144	75	33	67	60	140	99
321G3956/G3967	UNF 1 7/8"	144	75	33	67	60	140	99
U321/U322C40..	BSP 2"	158.5	80	41.5	73	75	150	99

Drawing 3442

2/2 VALVES FOR WATER AND NEUTRAL LIQUIDS

PILOT OPERATED

BRASS
PIPE MOUNTING
NORMALLY CLOSED

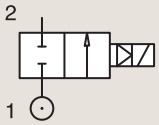

Port size	Orifice Ø	Flow factors			Operating Pressure Differential			Fluid Temp.		Seat Seal	Parker LUCIFER® Valves			Power		Coil Group	Dwg. No.
					Min	Max(MOPD)		Min	Max								
BSP	mm	Kv l/min	KV m³/h	Qn l/min	bar	AC bar	DC bar	°C	°C		Valve Ref.	Housing Ref.	Coil Ref.	AC W	DC W		
1"	18	110	6.6	10150	0.3	10	10	-10	100	NBR	**321K37**	**8993**	**481180**	4	5	1.1	7098
	18	110	6.6	10150	0.3	10	7	-10	75	NBR	**321K37**	**8993**	**488980**	2	2.5	1.1	7098
	18	110	6.6	10150	0.3	12	12	-10	100	FKM	**321K4706**	**2995**	**481865**	8	9	2.1/3.0	7100
	18	110	6.6	10150	0.3	12	12	-10	120	FKM	**321K4706**	**4270**	**481000**	8	8	2.1/3.0	7100
	18	110	6.6	10150	0.3	12	12	-10	100	FKM	**321K4756** [2]	**2995**	**481865**	8	9	2.1/3.0	7100
	18	110	6.6	10150	0.3	12	12	-10	120	FKM	**321K4756** [2]	**4270**	**481000**	8	8	2.1/3.0	7100
	25	180	10.8	14000	0.3	16	16	-10	100	NBR	**E321G37**	**2995**	**481865**	8	9	2.0	3442
	25	180	10.8	14000	0.3	16	16	-10	100	NBR	**E321G37**	**4270**	**481000**	8	8	2.0	3442
	28	270	16.2	18000	0.3	16	16	-10	100	NBR	**E321G38**	**2995**	**481865**	8	9	2.0	3442
	28	270	16.2	18000	0.3	16	16	-10	100	NBR	**E321G38**	**4270**	**481000**	8	8	2.0	3442
1 1/2"	40	420	25.2	31500	0.3	16	7	-10	100	NBR	**E321G39** [1]	**2995**	**481865**	8	9	2.0	3442
	40	420	25.2	31500	0.3	16	8.5	-10	100	NBR	**E321G39** [1]	**4270**	**481000**	8	8	2.0	3442
2"	40	540	32.4	40000	0.3	16	7	-10	100	NBR	**E321G40** [1]	**2995**	**481865**	8	9	2.0	3442
	40	540	32.4	40000	0.3	16	8.5	-10	100	NBR	**E321G40** [1]	**4270**	**481000**	8	8	2.0	3442

Notes:

1. Pilot seat disc in synthetic Ruby
2. With manual override

For this page	Port size	Orifice (mm)	Kv (l/min)	MOPD (bar)	Fluid Temp (°C)	Amb Temp (°C)
From	1''	18	110	7	-10	-10
To	2''	40	540	16	120	50

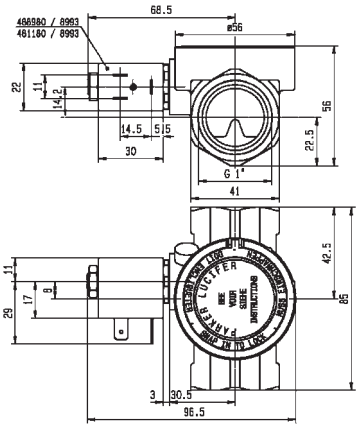

Drawing 7098

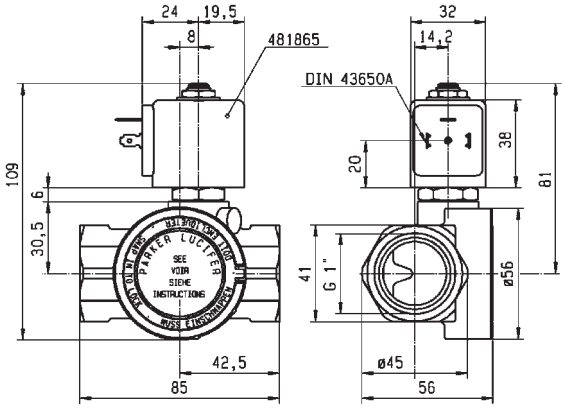

Drawing 7100

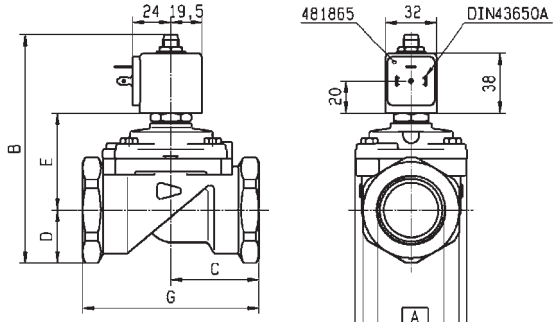

	RACCORD A	B	C	D	E	F	G	H
321/322/E321G36..	BSP 3/4"	121	50	23	54	41	100	70
321/322/E321G37..	BSP 1"	121	50	23	54	41	100	70
321/322/E321G38..	BSP 1 1/4"	137.5	55	33	60.5	60	110	70
321/322/E321G39..	BSP 1 1/2"	144	75	33	67	60	140	99
321G3956/G3967	UNF 1 7/8"	144	75	33	67	60	140	99
U321/U322G40..	BSP 2"	158.5	80	41.5	73	75	150	99

Drawing 3442

2/2 VALVES FOR WATER AND NEUTRAL LIQUIDS

PILOT OPERATED

BRASS
PIPE MOUNTING
NORMALLY OPEN

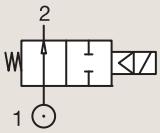

Port size	Orifice Ø	Flow factors			Operating Pressure Differential			Fluid Temp.		Seat Seal	Parker Valves			Power		Coil Group	Dwg. No.
					Min	Max(MOPD)		Min	Max								
BSP	mm	Kv l/min	KV m³/h	Qn m³/h	bar	AC bar	DC bar	°C	°C		Valve Order Number	Valve Type	Coil Type	AC W	DC W		
3/8"	13	50	3	-	0.1	10	10	-10	140	EPDM	**444600W**	**7322BIH00**	**481865**	8	9	2.0	060
	13	50	3	-	0.1	20	20	-10	90	NBR	**443805W**	**7322BIN00**	**481865**	8	9	2.0	060
	13	50	3	-	0.1	20	20	-10	140	FKM	**444499W**	**7322BIV00**	**481865**	8	9	2.0	060
1/2"	13	50	3	-	0.1	10	10	-10	140	EPDM	**444601W**	**7322BAH00**	**481865**	8	9	2.0	060
	13	50	3	-	0.1	20	20	-10	90	NBR	**443806W**	**7322BAN00**	**481865**	8	9	2.0	060
	13	50	3	-	0.1	20	20	-10	140	FKM	**444500W**	**7322BAV00**	**481865**	8	9	2.0	060
3/4"	20	140	8.4	-	0.1	10	10	-10	140	EPDM	**444602W**	**7322BCH00**	**481865**	8	9	2.0	061
	20	140	8.4	-	0.1	20	20	-10	90	NBR	**443807W**	**7322BCN00**	**481865**	8	9	2.0	061
	20	140	8.4	-	0.1	20	20	-10	140	FKM	**444501W**	**7322BCV00**	**481865**	8	9	2.0	061
1"	25	160	9.6	-	0.1	10	10	-10	140	EPDM	**444603W**	**7322BDH00**	**481865**	8	9	2.0	061
	25	160	9.6	-	0.1	20	20	-10	90	NBR	**443808W**	**7322BDN00**	**481865**	8	9	2.0	061
	25	160	9.6	-	0.1	20	20	-10	140	FKM	**444502W**	**7322BDV00**	**481865**	8	9	2.0	061
1 1/4"	35	420	25.2	-	0.1	10	10	-10	140	EPDM	**444576W**	**7322BEH00**	**481865**	8	9	2.0	062
	35	420	25.2	-	0.1	10	10	-10	90	NBR	**443809W**	**7322BEN00**	**481865**	8	9	2.0	062
1 1/2"	40	500	30	-	0.1	10	10	-10	140	EPDM	**444604W**	**7322BFH00**	**481865**	8	9	2.0	062
	40	500	30	-	0.1	10	10	-10	90	NBR	**443810W**	**7322BFN00**	**481865**	8	9	2.0	062
2"	50	620	37.2	-	0.1	10	10	-10	140	EPDM	**444605W**	**7322BGH00**	**481865**	8	9	2.0	062
	50	620	37.2	-	0.1	10	10	-10	90	NBR	**443811W**	**7322BGN00**	**481865**	8	9	2.0	062
2 1/2"	65	1100	66	-	0.2	10	10	-10	90	NBR	**444513W**	**7322BLN06**	**481865**	8	9	2.0	063
3"	75	1334	80	-	0.2	10	10	-10	90	NBR	**444503W**	**7322BMN06**	**481865**	8	9	2.0	063

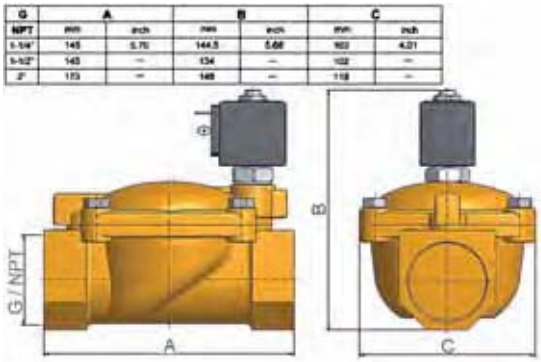

Drawing 062

For this page	Port size	Orifice (mm)	Kv (l/min)	MOPD (bar)	Fluid Temp (°C)	Amb Temp (°C)
From	3/8''	13	50	10	-10	-10
To	3''	75	1334	20	140	50

G	A		B		C	
NPT	mm	inch	mm	inch	mm	inch
3/4"	99	3.71	110	4.33	40	1.57
1"	72	2.83	112	4.41	40	1.57

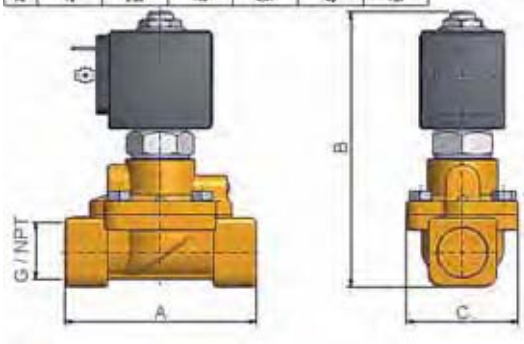

Drawing 060

G	A		B		C	
NPT	mm	inch	mm	inch	mm	inch
3/4"	100	3.93	117.5	4.62	65	2.55
1"	104	4.09	123	4.84	65	2.55

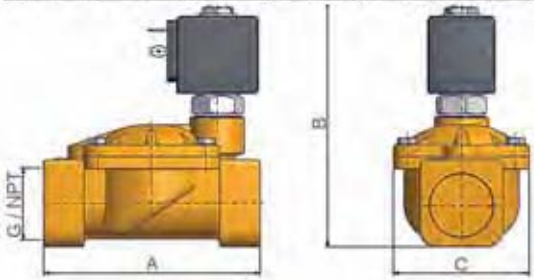

Drawing 061

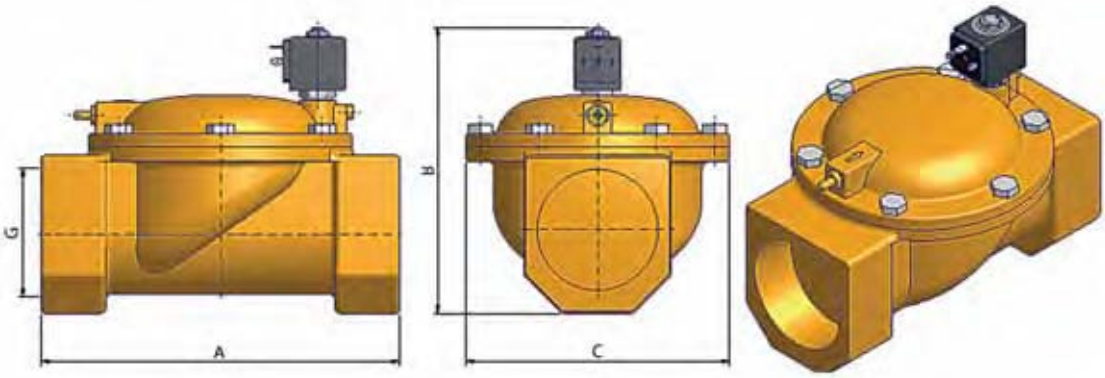

Drawing 063

2/2 VALVES FOR WATER AND NEUTRAL LIQUIDS

PILOT OPERATED

BRASS
PIPE MOUNTING
NORMALLY OPEN

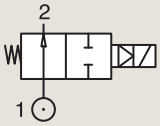

Port size	Orifice Ø	Flow factors			Operating Pressure Differential			Fluid Temp.		Seat Seal	Parker LUCIFER® Valves			Power		Coil Group	Dwg. No.
					Min	Max(MOPD)		Min	Max		Valve Ref.	Housing Ref.	Coil Ref.				
BSP	mm	Kv l/min	KV m³/h	Qn l/min	bar	AC bar	DC bar	°C	°C					AC W	DC W		
1/4"	12	32	1.92	2150	0.3	12	12	-10	100	FKM	322K4106	2995	481865	8	9	2.1	7094
	12	32	1.92	2150	0.3	12	12	-10	120	FKM	322K4106	4270	481000	8	8	2.1	7094
3/8"	12	45	2.7	3050	0.3	12	12	-10	100	FKM	322K4306	2995	481865	8	9	2.1	7094
	12	45	2.7	3050	0.3	12	12	-10	120	FKM	322K4306	4270	481000	8	8	2.1	7094
1/2"	12	50	3	3400	0.3	12	12	-10	100	FKM	322K4506	2995	481865	8	9	2.1	7094
	12	50	3	3400	0.3	12	12	-10	120	FKM	322K4506	4270	481000	8	8	2.1	7094
	15	60	3.6	3890	0.3	15	15	-10	100	NBR	322G75	2995	481865	8	9	2.1	3522
	15	60	3.6	3890	0.3	15	15	-10	100	NBR	322G75	4270	481000	8	8	2.1	3522
3/4"	18	100	6	9400	0.3	12	12	-10	100	FKM	322K4606	2995	481865	8	9	2.1	7099
	18	100	6	9400	0.3	12	12	-10	120	FKM	322K4606	4270	481000	8	8	2.1	7099
	20	135	8.1	9500	0.3	16	16	-10	100	NBR	322G36	2995	481865	8	9	2.1	3442
	20	135	8.1	9500	0.3	16	16	-10	100	NBR	322G36	4270	481000	8	8	2.1	3442

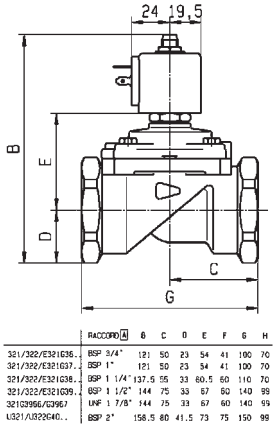

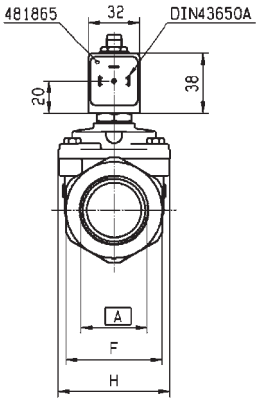

Drawing 3442

For this page	Port size	Orifice (mm)	Kv (l/min)	MOPD (bar)	Fluid Temp (°C)	Amb Temp (°C)
From	1/4"	12	32	12	-10	-10
To	3/4"	20	135	16	120	50

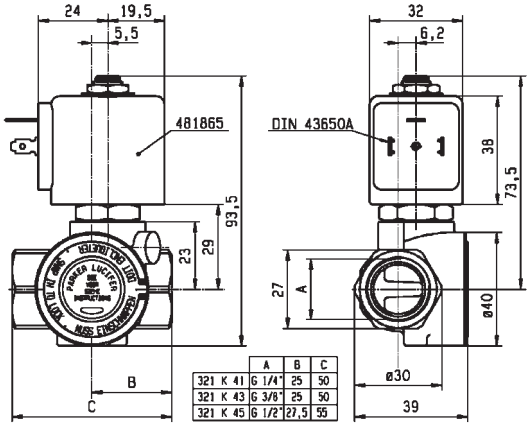

	A	B	C
321 K 41	G 1/4"	25	50
321 K 43	G 3/8"	25	50
321 K 45	G 1/2"	27,5	55

Drawing 7094

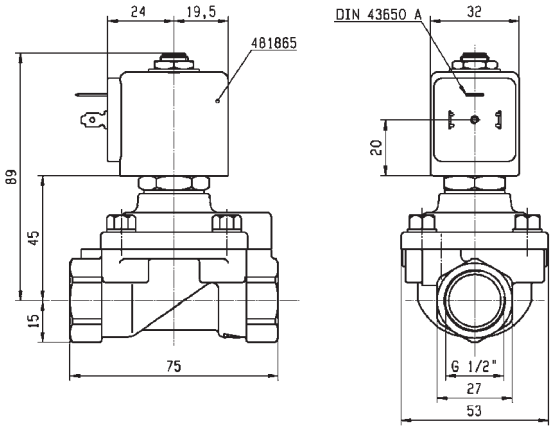

Drawing 3522

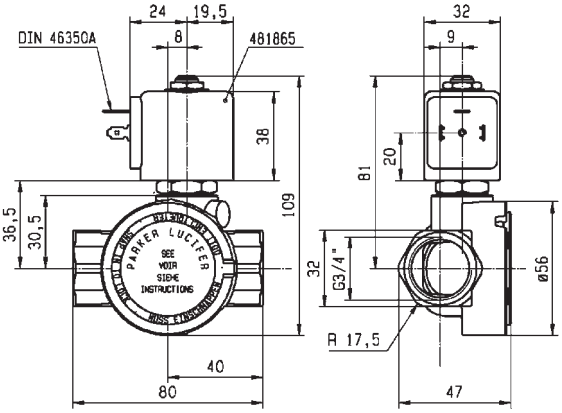

Drawing 7099

2/2 VALVES FOR WATER AND NEUTRAL LIQUIDS

PILOT OPERATED

BRASS PIPE MOUNTING

NORMALLY OPEN

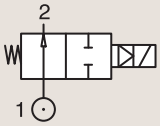

Port size	Orifice Ø	Flow factors			Operating Pressure Differential			Fluid Temp.		Seat Seal	Parker LUCIFER® Valves			Power		Coil Group	Dwg. No.
					Min	Max(MOPD)		Min	Max								
BSP	mm	Kv l/min	KV m³/h	Qn l/min	bar	AC bar	DC bar	°C	°C		Valve Ref.	Housing Ref.	Coil Ref.	AC W	DC W		
1"	18	110	6.6	10150	0.3	12	12	-10	100	FKM	**322K4706**	**2995**	**481865**	8	9	2.0	7100
	18	110	6.6	10150	0.3	12	12	-10	120	FKM	**322K4706**	**4270**	**481000**	8	8	2.0	7100
	25	180	10.8	14000	0.3	16	16	-10	100	NBR	**322G37**	**2995**	**481865**	8	9	2.1	3442
	25	180	10.8	14000	0.3	16	16	-10	100	NBR	**322G37**	**4270**	**481000**	8	8	2.1	3442
1 1/2"	40	420	25.2	31500	0.3	12	12	-10	100	NBR	**322G39**	**2995**	**481865**	8	9	2.1	3442
	40	420	25.2	31500	0.3	12	12	-10	100	NBR	**322G39**	**4270**	**481000**	8	8	2.1	3442

BRASS SUB-BASE MOUNTING

NORMALLY CLOSED

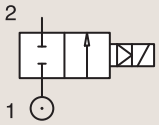

Port size	Orifice Ø	Flow factors			Operating Pressure Differential			Fluid Temp.		Seat Seal	Parker LUCIFER® Valves			Power		Coil Group	Dwg. No.
					Min	Max(MOPD)		Min	Max								
	mm	Kv l/min	KV m³/h	Qn l/min	bar	AC bar	DC bar	°C	°C		Valve Ref.	Housing Ref.	Coil Ref.	AC W	DC W		
SB	14	45	2.7	2100	0.3	40	25	-10	100	NBR	**E321F32** [1]	**2995**	**481865**	8	9	2.0	3520
	14	45	2.7	2100	0.3	40	30	-10	100	NBR	**E321F32** [1]	**4270**	**481000**	8	8	2.0	3520
	14	45	2.7	2100	0.3	40	40	-10	100	NBR	**E321F32** [1]	**4270**	**486265**	14	14	2.0	3520

Notes:

1. Pilot seat disc in synthetic Ruby

For this page	Port size	Orifice (mm)	Kv (l/min)	MOPD (bar)	Fluid Temp (°C)	Amb Temp (°C)
From	14 mm	14	45	12	-10	-10
To	1 1/2"	40	420	40	120	50

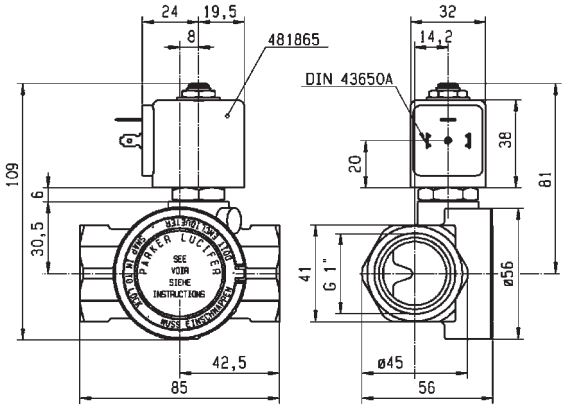

Drawing 7100

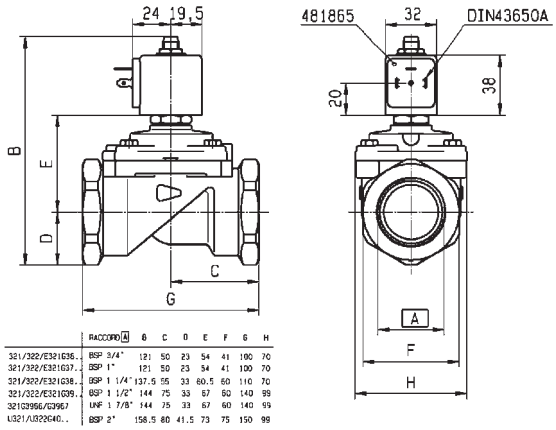

	RACCORD A	B	C	D	E	F	G	H
321/322/E321G36..	BSP 3/4"	121	50	23	54	41	100	70
321/322/E321G37..	BSP 1"	121	50	23	54	41	100	70
321/322/E321G38..	BSP 1 1/4"	137.5	55	33	60.5	50	110	70
321/322/E321G39..	BSP 1 1/2"	144	75	33	67	50	140	99
321G396/G3962	UNF 1 7/8"	144	75	33	67	50	140	99
U321/U322G40..	BSP 2"	158.5	80	41.5	73	75	150	99

Drawing 3442

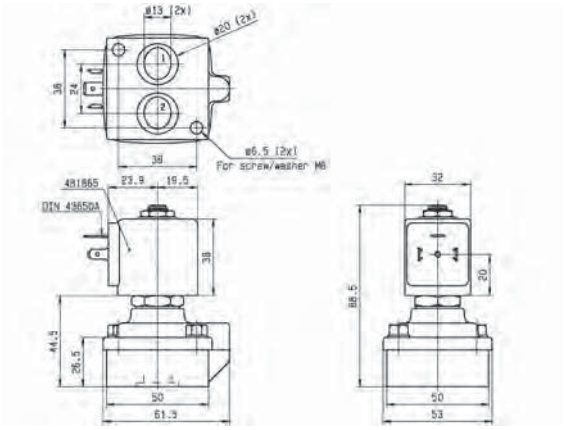

Drawing 3520

ANTI WATER HAMMER VALVES

Water

2/2

Actuation	Body	Function	Port Size	Orifice (mm)	Flow Factor Kv(l/min)	MOPD (bar)	Max Fluid Temp. (°C)	Page Parker Valves	Page Parker LUCIFER® Valves
Magnalift	**Brass/Pipe mounting**	**Normally Closed**	1''	15 to 25	170	10	140	-	**114**
Pilot Operated	**Brass/Pipe mounting**	**Normally Closed**	1/4''	12	32	12	120	-	**118**
			3/8''	12	45	12	120	-	**118**
			1/2''	12	50	12	120	-	**118**
			3/4''	18 to 20	135	16	120	-	**118**
			1''	18 to 25	180	16	120	**116**	**120**
			1 1/4''	25 to 28	280	16	100	**116**	**120**
			1 1/2''	35 to 40	500	16	100	**116**	**120**
			2''	40 to 50	620	16	100	**116**	**120**
			2 1/2''	65	1100	10	90	**116**	-
			3''	75	1334	10	90	**116**	-
		Normally Open	3/4''	20	135	16	100	-	**122**
			1''	25	180	16	100	-	**122**
			1 1/4''	28	270	16	100	-	**122**
			1 1/2''	40	425	12	100	-	**122**
			2''	40	540	12	100	-	**122**

2/2 ANTI WATER HAMMER VALVES

MAGNALIFT

Commercial Equipment

BRASS
PIPE MOUNTING
NORMALLY CLOSED

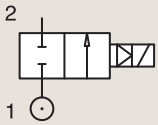

Port size	Orifice Ø	Flow factors			Operating Pressure Differential			Fluid Temp.		Seat Seal	Parker LUCIFER® Valves			Power		Coil Group	Dwg. No.
					Min	Max(MOPD)		Min	Max		Valve Ref.	Housing Ref.	Coil Ref.				
BSP	mm	Kv l/min	KV m³/h	Qn l/min	bar	AC bar	DC bar	°C	°C					AC W	DC W		
1"	15	80	4.8	6000	0	-	10	-10	100	NBR	221G1731 12	2995	481865	-	9	2.1	3445
	15	80	4.8	6000	0	10	10	-10	120	NBR	221G1731 12	-	492070	9	8	2.1	3445
	15	80	4.8	6000	0	10	10	-10	120	NBR	221G1731 12	-	492190	11	9	2.1	3445
	25	160	9.6	-	0	10	-	0	100	EPDM	221G2103	2995	481865	8	-	2.0	3448
	25	160	9.6	-	0	10	-	0	120	EPDM	221G2103	4270	481000	8	-	2.0	3448
	25	160	9.6	-	0	10	10	0	120	EPDM	221G2103	4270	486265	14	14	2.0	3448
	25	160	9.6	-	0	4	4	0	140	EPDM	221G2103	2995	492425	14	14	2.0	3448
	25	170	10.2	14000	0	-	10	-10	100	NBR	221G2131 12	2995	481865	-	9	2.1	3448
	25	170	10.2	14000	0	10	10	-25	40	NBR	221G2131 12	-	492070	9	8	2.1	3448
	25	170	10.2	14000	0	10	10	-25	40	NBR	221G2131 12	-	492190	11	9	2.1	3448

Notes:

1. Valves with model number ending in 30 or 31 are only compatible with explosion proof electrical parts shown, or with group 2.1 coils only in DC voltage.
2. With 4 position selector for controlled closure rate

For this page	Port size	Orifice (mm)	Kv (l/min)	MOPD (bar)	Fluid Temp (°C)	Amb Temp (°C)
From	1''	15	80	4	-25	-10
To	1''	25	170	10	140	50

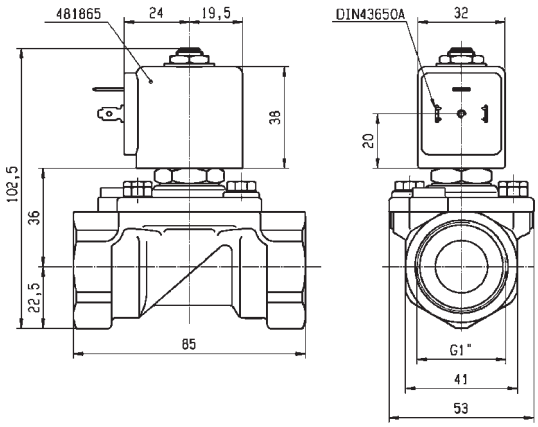

Drawing 3445

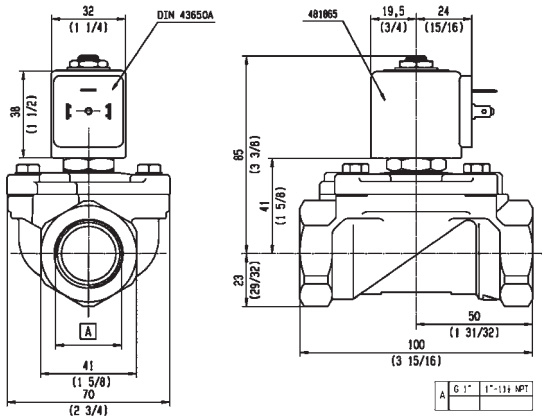

Drawing 3448

2/2 ANTI WATER HAMMER VALVES

PILOT OPERATED

Commercial Equipment

Industrial Equipment

Medical / Instrumentation

BRASS
PIPE MOUNTING
NORMALLY CLOSED

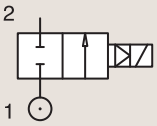

Port size	Orifice Ø	Flow factors			Operating Pressure Differential Max(MOPD)			Fluid Temp.		Seat Seal	Parker Valves			Power		Coil Group	Dwg. No.
					Min			Min	Max		Valve Order Number	Valve Type	Coil Type				
BSP	mm	Kv l/min	KV m³/h	Qn m³/h	bar	AC bar	DC bar	°C	°C					AC W	DC W		
3/4"	20	140	8.4	-	0.1	10	10	-10	90	NBR	443784W [1]	7321BCN02	481865	8	9	2.0	057
1"	25	160	9.6	-	0.1	10	10	-10	90	NBR	443788W [1]	7321BDN02	481865	8	9	2.0	057
1 1/4"	35	420	25.2	-	0.1	5	5	-10	90	NBR	443792W [1]	7321BEN02	481865	8	9	2.0	058
1 1/2"	40	500	30	-	0.1	5	5	-10	90	NBR	443796W [1]	7321BFN02	481865	8	9	2.0	058
2"	50	620	37.2	-	0.1	5	5	-10	90	NBR	443800W [1]	7321BGN02	481865	8	9	2.0	058
2 1/2"	65	1100	66	-	0.2	10	10	-10	90	NBR	443802W [1]	7321BLN02	481865	8	9	2.0	059
3"	75	1334	80	-	0.2	10	10	-10	90	NBR	443803W [1]	7321BMN02	481865	8	9	2.0	059

Notes:

1. With manual override

For this page	Port size	Orifice (mm)	Kv (l/min)	MOPD (bar)	Fluid Temp (°C)	Amb Temp (°C)
From	1''	20	140	5	-10	-10
To	3''	75	1334	10	90	50

G	A		B		C	
NPT	mm	inch	mm	inch	mm	inch
3/4"	100	3.93	107	4.21	65	2.56
1"	104	4.09	112.5	4.43	65	2.56

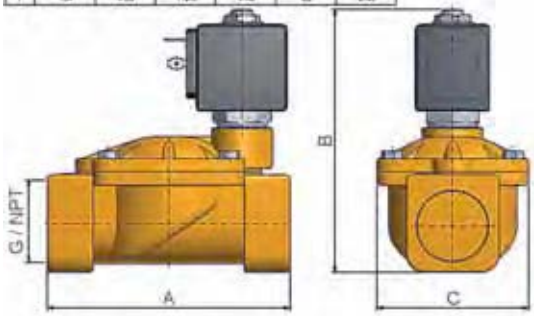

Drawing 057

G	A		B		C	
NPT	mm	inch	mm	inch	mm	inch
1-1/4"	145	5.70	134	5.27	102	4.01
1-1/2"	145	5.70	134	5.27	102	4.01
2"	173	6.81	148	5.82	118	4.64

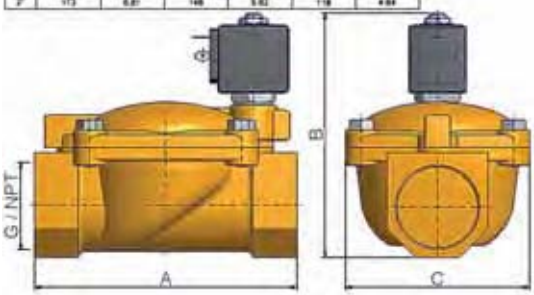

Drawing 058

G	A		B		C	
	mm	inch	mm	inch	mm	inch
2-1/2"	245	—	195	—	184	—
3"	250	—	195	—	184	—

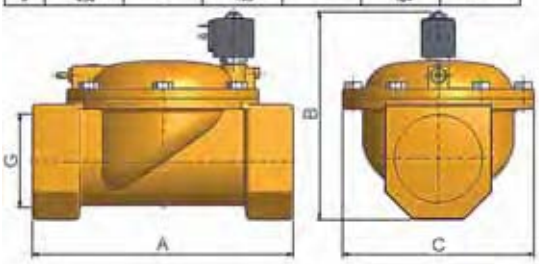

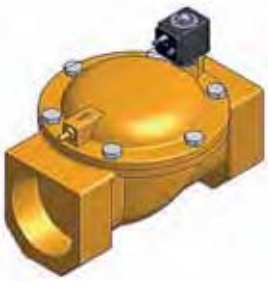

Drawing 059

2/2 ANTI WATER HAMMER VALVES

PILOT OPERATED

BRASS
PIPE MOUNTING
NORMALLY CLOSED

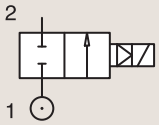

Port size	Orifice Ø	Flow factors			Operating Pressure Differential			Fluid Temp.		Seat Seal	Parker LUCIFER® Valves			Power		Coil Group	Dwg. No.
					Min	Max(MOPD)		Min	Max		Valve Ref.	Housing Ref.	Coil Ref.				
BSP	mm	Kv l/min	KV m³/h	Qn l/min	bar	AC bar	DC bar	°C	°C					AC W	DC W		
1/4"	12	32	1.92	2150	0.3	12	12	-10	100	FKM	321K4106	2995	481865	8	9	2.1/3.0	7094
	12	32	1.92	2150	0.3	12	12	-10	120	FKM	321K4106	4270	481000	8	8	2.1/3.0	7094
3/8"	12	45	2.7	3050	0.3	12	12	-10	100	FKM	321K4306	2995	481865	8	9	2.1/3.0	7094
	12	45	2.7	3050	0.3	12	12	-10	120	FKM	321K4306	4270	481000	8	8	2.1/3.0	7094
1/2"	12	50	3	3400	0.3	12	12	-10	100	FKM	321K4506	2995	481865	8	9	2.1/3.0	7094
	12	50	3	3400	0.3	12	12	-10	120	FKM	321K4506	4270	481000	8	8	2.1/3.0	7094
	12	50	3	3400	0.3	12	12	-10	100	FKM	321K4556 [1]	2995	481865	8	9	2.1/3.0	7094
	12	50	3	3400	0.3	12	12	-10	120	FKM	321K4556 [1]	4270	481000	8	8	2.1/3.0	7094
3/4"	18	100	6	9400	0.3	12	12	-10	100	FKM	321K4606	2995	481865	8	9	2.1/3.0	7099
	18	100	6	9400	0.3	12	12	-10	120	FKM	321K4606	4270	481000	8	8	2.1/3.0	7099
	18	100	6	9400	0.3	12	12	-10	100	FKM	321K4656 [1]	2995	481865	8	9	2.1/3.0	7099
	18	100	6	9400	0.3	12	12	-10	120	FKM	321K4656 [1]	4270	481000	8	8	2.1/3.0	7099
	20	135	8.1	9500	0	16	16	-10	100	NBR	E321G3610 [2]	2995	481865	8	9	2.0	3442
	20	135	8.1	9500	0	16	16	-10	100	NBR	E321G3610 [2]	4270	481000	8	8	2.0	3442

Notes:

1. With manual override
2. With manual override and 4 position selector for controlled closure rate - without manual override and without 4 position selector on request: use same reference removing suffix '10', e.g. E321G36

For this page	Port size	Orifice (mm)	Kv (l/min)	MOPD (bar)	Fluid Temp (°C)	Amb Temp (°C)
From	1/4"	12	32	12	-10	-10
To	3/4"	20	135	16	120	50

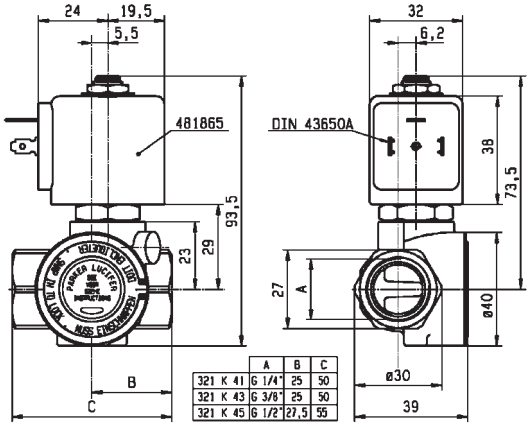

	A	B	C
321 K 41	G 1/4"	25	50
321 K 43	G 3/8"	25	50
321 K 45	G 1/2"	27,5	55

Drawing 7094

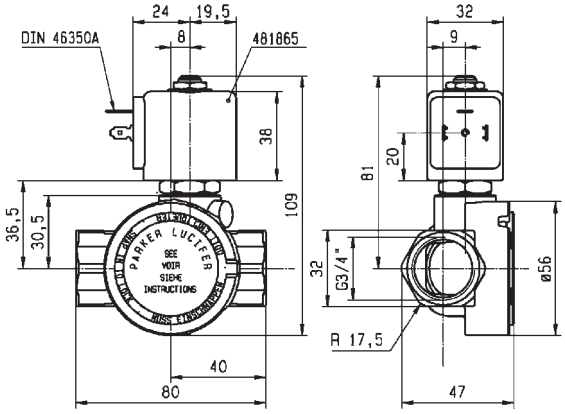

Drawing 7099

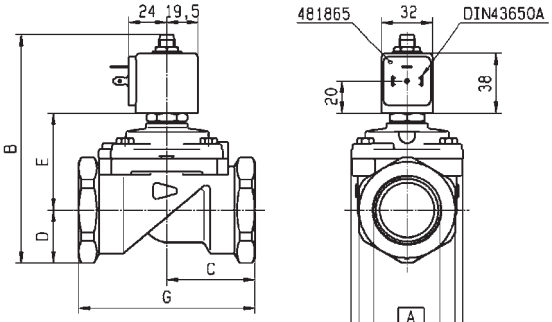

	RACCORD A	B	C	D	E	F	G	H
321/322/E321G36..	BSP 3/4"	121	50	23	54	41	100	70
321/322/E321G37..	BSP 1"	121	50	23	54	41	100	70
321/322/E321G38..	BSP 1 1/4"	137.5	55	33	60.5	60	110	70
321/322/E321G39..	BSP 1 1/2"	144	75	33	67	60	140	99
321G3956/G3967	UNF 1 7/8"	144	75	33	67	60	140	99
U321/U322G40..	BSP 2"	158.5	80	41.5	73	75	150	99

Drawing 3442

2/2 ANTI WATER HAMMER VALVES

PILOT OPERATED

BRASS
PIPE MOUNTING
NORMALLY CLOSED

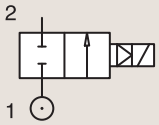

Port size	Orifice Ø	Flow factors			Operating Pressure Differential			Fluid Temp.		Seat Seal	Parker LUCIFER® Valves			Power		Coil Group	Dwg. No.
					Min	Max(MOPD)		Min	Max		Valve Ref.	Housing Ref.	Coil Ref.				
BSP	mm	Kv l/min	KV m³/h	Qn l/min	bar	AC bar	DC bar	°C	°C					AC W	DC W		
1"	18	110	6.6	10150	0.3	12	12	-10	100	FKM	**321K4706**	**2995**	**481865**	8	9	2.1/3.0	7100
	18	110	6.6	10150	0.3	12	12	-10	120	FKM	**321K4706**	**4270**	**481000**	8	8	2.1/3.0	7100
	18	110	6.6	10150	0.3	12	12	-10	100	FKM	**321K4756** [1]	**2995**	**481865**	8	9	2.1/3.0	7100
	18	110	6.6	10150	0.3	12	12	-10	120	FKM	**321K4756** [1]	**4270**	**481000**	8	8	2.1/3.0	7100
	25	180	10.8	14000	0.3	16	16	-10	100	NBR	**E321G3710** [2]	**2995**	**481865**	8	9	2.0	3442
	25	180	10.8	14000	0.3	16	16	-10	100	NBR	**E321G3710** [2]	**4270**	**481000**	8	8	2.0	3442
1 1/4"	28	280	16.8	18000	0.3	16	16	-10	100	NBR	**E321G3810** [2]	**2995**	**481865**	8	9	2.0	3442
	28	280	16.8	18000	0.3	16	16	-10	100	NBR	**E321G3810** [2]	**4270**	**481000**	8	8	2.0	3442
1 1/2"	40	420	25.2	31500	0.3	16	7	-10	100	NBR	**E321G3910** [2]	**2995**	**481865**	8	9	2.0	3442
	40	420	25.2	31500	0.3	16	8.5	-10	100	NBR	**E321G3910** [2]	**4270**	**481000**	8	8	2.0	3442
2"	40	540	32.4	40000	0.3	16	7	-10	100	NBR	**E321G4010** [2]	**2995**	**481865**	8	9	2.0	3442
	40	540	32.4	40000	0.3	16	8.5	-10	100	NBR	**E321G4010** [2]	**4270**	**481000**	8	8	2.0	3442

Notes:

1. With manual override
2. With manual override and 4 position selector for controlled closure rate - without manual override and without 4 position selector on request: use same reference removing suffix '10', e.g. E321G36

For this page	Port size	Orifice (mm)	Kv (l/min)	MOPD (bar)	Fluid Temp (°C)	Amb Temp (°C)
From	1''	18	110	7	-10	-10
To	2''	40	540	16	120	50

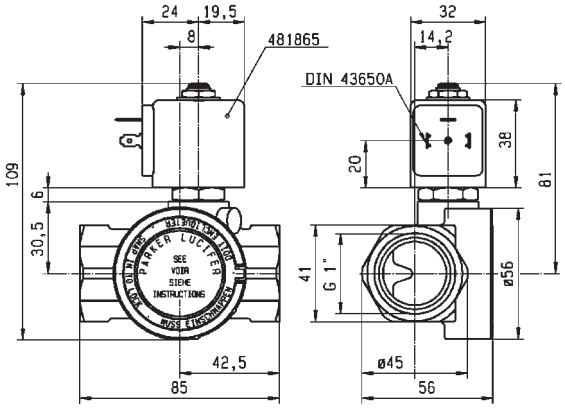

Drawing 7100

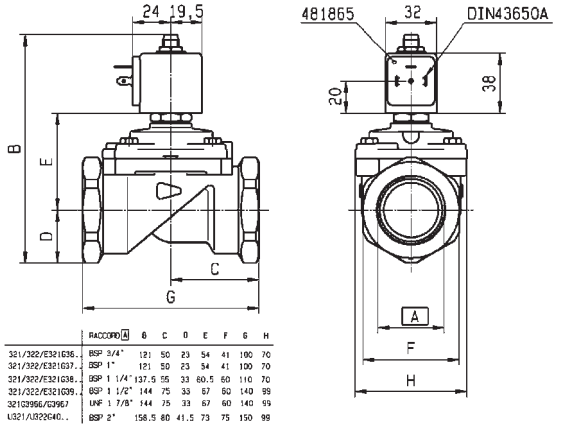

	RACCORD A	B	C	D	E	F	G	H
321/322/E321G36..	BSP 3/4"	121	50	23	54	41	100	70
321/322/E321G37..	BSP 1"	121	50	23	54	41	100	70
321/322/E321G38..	BSP 1 1/4"	137.5	55	33	60.5	50	110	70
321/322/E321G39..	BSP 1 1/2"	144	75	33	67	50	140	99
321G396/G3962	UNF 1 7/8"	144	75	33	67	60	140	99
U321/U322G40..	BSP 2"	158.5	80	41.5	73	75	150	99

Drawing 3442

2/2 ANTI WATER HAMMER VALVES

PILOT OPERATED

BRASS
PIPE MOUNTING

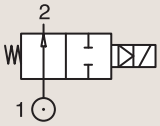

NORMALLY OPEN

Port size	Orifice Ø	Flow factors			Operating Pressure Differential			Fluid Temp.		Seat Seal	Parker LUCIFER® Valves			Power		Coil Group	Dwg. No.
					Min	Max(MOPD)		Min	Max		Valve Ref.	Housing Ref.	Coil Ref.				
BSP	mm	Kv l/min	KV m³/h	Qn l/min	bar	AC bar	DC bar	°C	°C					AC W	DC W		
3/4"	20	135	8.1	9300	0.3	16	16	-10	100	NBR	322G3610 [1]	2995	481865	8	9	2.1	3442
	20	135	8.1	9300	0.3	16	16	-10	100	NBR	322G3610 [1]	4270	481000	8	8	2.1	3442
1"	25	180	10.8	14000	0.3	16	16	-10	100	NBR	322G3710 [1]	2995	481865	8	9	2.1	3442
	25	180	10.8	14000	0.3	16	16	-10	100	NBR	322G3710 [1]	4270	481000	8	8	2.1	3442
1 1/4"	28	270	16.2	18000	0.3	16	16	-10	100	NBR	322G3810 [1]	2995	481865	8	9	2.1	3442
	28	270	16.2	18000	0.3	16	16	-10	100	NBR	322G3810 [1]	4270	481000	8	8	2.1	3442
1 1/2"	40	425	25.5	31000	0.3	12	12	-10	100	NBR	322G3910 [1]	2995	481865	8	9	2.1	3442
	40	425	25.5	31000	0.3	12	12	-10	100	NBR	322G3910 [1]	4270	481000	8	8	2.1	3442
2"	40	540	32.4	40000	0.3	12	12	-10	100	NBR	322G4010 [1]	2995	481865	8	9	2.1	3442
	40	540	32.4	40000	0.3	12	12	-10	100	NBR	322G4010 [1]	4270	481000	8	8	2.1	3442

Notes:

1. With 4 position selector for controlled closure rate

For this page	Port size	Orifice (mm)	Kv (l/min)	MOPD (bar)	Fluid Temp (°C)	Amb Temp (°C)
From	3/4''	20	135	12	-10	-10
To	2''	40	540	16	100	50

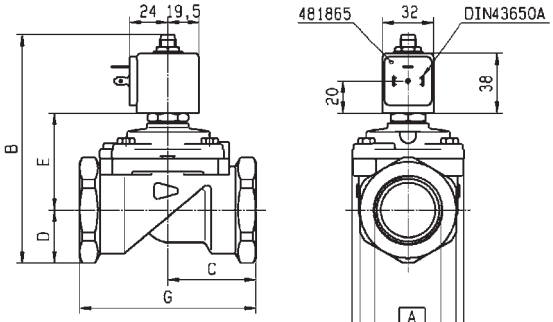

	RACCORD A	B	C	D	E	F	G	H
321/322/E321G36..	BSP 3/4"	121	50	23	54	41	100	70
321/322/E321G37..	BSP 1"	121	50	23	54	41	100	70
321/322/E321G38..	BSP 1 1/4"	137.5	55	33	60.5	60	110	70
321/322/E321G39..	BSP 1 1/2"	144	75	33	67	60	140	99
321G396/G3967	UNF 1 7/8"	144	75	33	67	60	140	99
U321/U322G40..	BSP 2"	158.5	80	41.5	73	75	150	99

Drawing 3442

HOT WATER AND STEAM VALVES

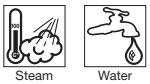

2/2

Actuation	Body	Function	Port Size	Orifice (mm)	Flow Factor Kv(l/min)	MOPD (bar)	Max Fluid Temp. (°C)	Page Parker Valves	Page Parker LUCIFER® Valves
Direct Operated	Brass/Pipe mounting	Normally Closed	1/8''	2.5	3.2	30	140	126	-
			1/4''	2.5 to 5	11	30	180	126	128
			3/8''	6	12	5	140	-	128
			1/2''	8.5 to 11	36	4	120	-	128
	303 Stainless St./Pipe mounting	Normally Closed	1/4''	1.5 to 5	10	100	180	-	130
Magnalift	Brass/Pipe mounting	Normally Closed	3/8''	15	65	10	140	-	132
			1/2''	15	65	10	140	-	132
			3/4''	15	80	10	140	-	132
			1''	15	80	10	140	-	132
Pilot Operated	Brass/Pipe mounting	Normally Closed	3/8''	10 to 16	78	16	180	134	-
			1/2''	10 to 16	78	16	180	134	138
			3/4''	18 to 27	193	14	180	136	-
			1''	18 to 27	193	14	180	136	-

2/2 HOT WATER AND STEAM VALVES

DIRECT OPERATED

Commercial Equipment

Industrial Equipment

Medical / Instrumentation

BRASS
PIPE MOUNTING
NORMALLY CLOSED

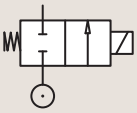

Port size	Orifice Ø	Flow factors			Operating Pressure Differential Max(MOPD)			Fluid Temp.		Seat Seal	Parker Valves			Power		Coil Group	Dwg. No.
					Min			Min	Max		Valve Order Number	Valve Type	Coil Type				
BSP	mm	Kv l/min	KV m³/h	Qn m³/h	bar	AC bar	DC bar	°C	°C					AC W	DC W		
1/8"	2.5	3.2	0.20	-	0	30	-	-30	140	Ruby	362496J	PM140IR	ZB09	9	-	20.1/20.2	027
	2.5	3.2	0.20	-	0	-	17	-30	140	Ruby	362496J	PM140IR	ZB12	-	12	20.1/20.2	027
1/4"	2.5	3.2	0.20	-	0	30	-	-30	140	Ruby	362518J [1]	PM140CR	ZB09	9	-	20.1/20.2	026
	2.5	3.2	0.20	-	0	-	17	-30	140	Ruby	362518J [1]	PM140CR	ZB12	-	12	20.1/20.2	026
	2.5	3.2	0.20	-	0	30	-	-30	140	Ruby	362518J [1]	PM140CR	ZH14	14	-	20.1/20.2	026
	2.5	3.2	0.20	-	0	-	17	-30	140	Ruby	362518J [1]	PM140CR	ZH16	-	16	20.1/20.2	026
	3	4.2	0.25	-	0	10	-	-10	140	EPDM	360470 [2]	PM126YH	ZB09	9	-	20.1/20.2	008
	3	4.2	0.25	-	0	-	6	-10	140	EPDM	360470 [2]	PM126YH	ZB12	-	12	20.1/20.2	008
	3	4.2	0.25	-	0	10	-	-10	140	EPDM	360470 [2]	PM126YH	ZH14	14	-	20.1/20.2	008
	3	4.2	0.25	-	0	-	6	-10	140	EPDM	360470 [2]	PM126YH	ZH16	-	16	20.1/20.2	008
	3	4.2	0.25	-	0	10	-	-10	180	PTFE	360475 [2]	PM126YT	ZH14	14	-	20.1/20.2	008
	3	4.2	0.25	-	0	-	10	-10	180	PTFE	360475 [2]	PM126YT	ZH16	-	16	20.1/20.2	008
	3	4	0.24	-	0	30	-	-30	140	Ruby	362524J	PM140DR	ZB09	9	-	20.1/20.2	026
	3	4	0.24	-	0	-	12	-30	140	Ruby	362524J	PM140DR	ZB12	-	12	20.1/20.2	026
	3	4	0.24	-	0	30	-	-30	140	Ruby	362524J	PM140DR	ZH14	14	-	20.1/20.2	026
	3	4	0.24	-	0	-	12	-30	140	Ruby	362524J	PM140DR	ZH16	-	16	20.1/20.2	026
	3	3.3	0.2	-	0	10	-	-10	140	EPDM	364880J [2]	PM158IH	ZH14	14	-	20.2	042
	3	3.3	0.2	-	0	-	4	-10	140	EPDM	364880J [2]	PM158IH	ZH16	-	16	20.2	042
	3	3.3	0.2	-	0	10	-	-10	180	PTFE	364884J [2]	PM158IT	ZH14	14	-	20.2	042
	3	3.3	0.2	-	0	-	10	-10	180	PTFE	364884J [2]	PM158IT	ZH16	-	16	20.2	042

Notes:

1. DIN-EN-ISO 23553-1 (2009-10) approved for oil burners
2. Maximum pressure for steam: 4 Bar (140°C)

For this page	Port size	Orifice (mm)	Kv (l/min)	MOPD (bar)	Fluid Temp (°C)	Amb Temp (°C)
From	1/8''	2.5	3.2	4	-30	-10
To	1/4''	3	4.2	30	180	50

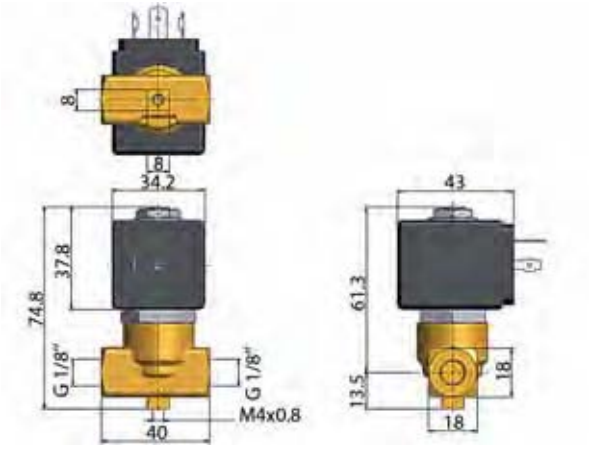

Drawing 027

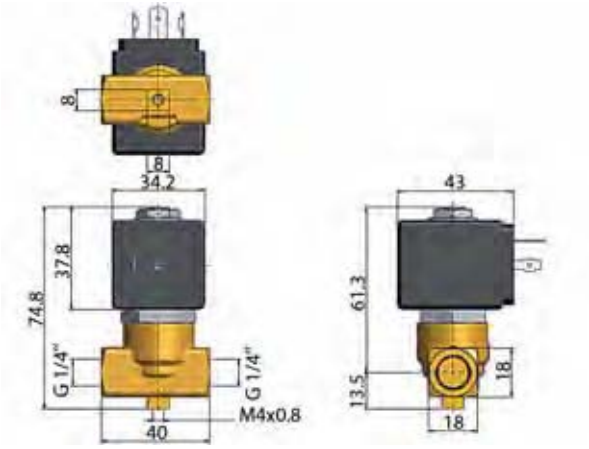

Drawing 026

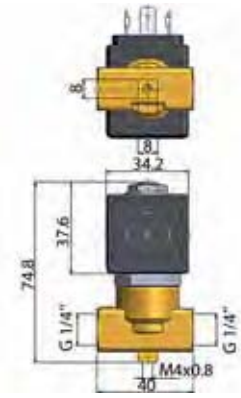

Drawing 008

Drawing 042

2/2 HOT WATER AND STEAM VALVES

DIRECT OPERATED

BRASS
PIPE MOUNTING
NORMALLY CLOSED

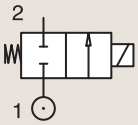

Port size	Orifice Ø	Flow factors			Operating Pressure Differential			Fluid Temp.		Seat Seal	Parker LUCIFER® Valves			Power		Coil Group	Dwg. No.
					Min	Max(MOPD)		Min	Max								
BSP	mm	Kv l/min	KV m³/h	Qn l/min	bar	AC bar	DC bar	°C	°C		Valve Ref.	Housing Ref.	Coil Ref.	AC W	DC W		
1/4"	3	4.5	0.27	-	0	10	7	0	100	EPDM	**121K0323**	**2995**	**481865**	8	9	2.0	3510
	3	4.5	0.27	-	0	10	8.5	0	120	EPDM	**121K0323**	**4270**	**481000**	8	8	2.0	3510
	3	4.5	0.27	-	0	10	10	0	120	EPDM	**121K0323**	**4270**	**486265**	14	14	2.0	3510
	3	4.5	0.27	-	0	10	10	0	120	EPDM	**121K0323**	**2995**	**492425**	14	14	2.0	3510
	5	11	0.66	750	0	7	2	0	100	EPDM	**121K0103**	**2995**	**481865**	8	9	2.0	3510
	5	11	0.66	750	0	7	2.8	0	120	EPDM	**121K0103**	**4270**	**481000**	8	8	2.0	3510
	5	11	0.66	750	0	7	5	0	120	EPDM	**121K0103**	**4270**	**486265**	14	14	2.0	3510
	5	11	0.66	750	0	4	3.5	0	120	EPDM	**121K0103**	**2995**	**492425**	14	14	2.0	3510
	5	11	0.66	750	0	7	2	0	100	EPDM	**121K0113**	**2995**	**481865**	8	9	2.0	3510
3/8"	6	12	0.72	1100	0	5	1.1	0	100	EPDM	**121K3303**	**2995**	**481865**	8	9	2.0	3551
	6	12	0.72	1100	0	5	1.5	0	120	EPDM	**121K3303**	**4270**	**481000**	8	8	2.0	3551
	6	12	0.72	1100	0	4	4	0	120	EPDM	**121K3303**	**4270**	**486265**	14	14	2.0	3551
	6	12	0.72	1100	0	4	4	0	140	EPDM	**121K3303**	**2995**	**492425**	14	14	2.0	3551
1/2"	8.5	25	1.5	-	0	2.2	0.5	0	120	EPDM	**E121K4603**	**4270**	**481000**	8	8	2.0	3427
	8.5	25	1.5	-	0	4	1.2	0	120	EPDM	**E121K4603**	**4270**	**486265**	14	14	2.0	3427
	8.5	25	1.5	-	0	4	1	0	120	EPDM	**E121K4603**	**2995**	**492425**	14	14	2.0	3427
	11	36	2.16	-	0	1.2	0.35	0	120	EPDM	**E121K4503**	**4270**	**481000**	8	8	2.0	3427
	11	36	2.16	-	0	2.5	0.7	0	120	EPDM	**E121K4503**	**4270**	**486265**	14	14	2.0	3427
	11	36	2.16	-	0	2.5	0.5	0	120	EPDM	**E121K4503**	**2995**	**492425**	14	14	2.0	3427

For this page	Port size	Orifice (mm)	Kv (l/min)	MOPD (bar)	Fluid Temp (°C)	Amb Temp (°C)
From	1/4"	3	4.5	0.4	0	-10
To	1/2"	11	36	10	140	50

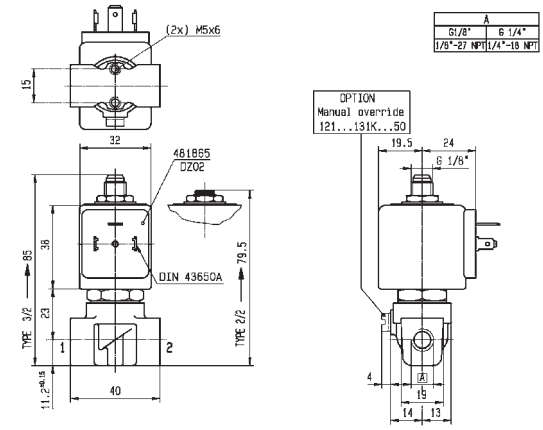

Drawing 3510

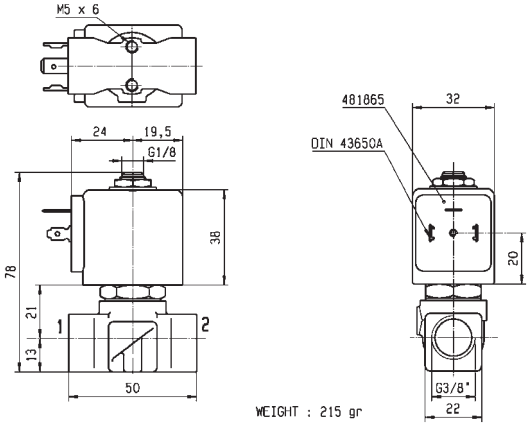

Drawing 3551

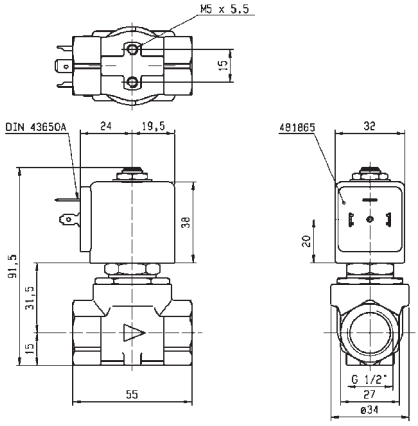

Drawing 3427

2/2 HOT WATER AND STEAM VALVES

DIRECT OPERATED

303 STAINLESS ST. PIPE MOUNTING

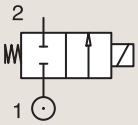

NORMALLY CLOSED

Port size	Orifice Ø	Flow factors			Operating Pressure Differential			Fluid Temp.		Seat Seal	Parker LUCIFER® Valves			Power		Coil Group	Dwg. No.
					Min	Max(MOPD)		Min	Max		Valve Ref.	Housing Ref.	Coil Ref.				
BSP	mm	Kv l/min	KV m³/h	Qn l/min	bar	AC bar	DC bar	°C	°C					AC W	DC W		
1/4"	1.5	1.5	0.09	80	0	60	25	0	100	Ruby	**121V5463**	**2995**	**481865**	8	9	2.0	8116
	1.5	1.5	0.09	80	0	75	30	0	130	Ruby	**121V5463**	**4270**	**481000**	8	8	2.0	8116
	1.5	1.5	0.09	80	0	100	55	0	140	Ruby	**121V5463**	**4270**	**486265**	14	14	2.0	8116
	2.5	3.5	0.21	220	0	28	10	0	100	Ruby	**121V5763**	**2995**	**481865**	8	9	2.0	8116
	2.5	3.5	0.21	220	0	34	12	0	130	Ruby	**121V5763**	**4270**	**481000**	8	8	2.0	8116
	2.5	3.5	0.21	220	0	50	22	0	140	Ruby	**121V5763**	**4270**	**486265**	14	14	2.0	8116
	3	4.5	0.27	315	0	20	7	0	100	Ruby	**121V5363**	**2995**	**481865**	8	9	2.0	8116
	3	4.5	0.27	315	0	25	8.5	0	130	Ruby	**121V5363**	**4270**	**481000**	8	8	2.0	8116
	3	4.5	0.27	315	0	36	15	0	140	Ruby	**121V5363**	**4270**	**486265**	14	14	2.0	8116
	4	7	0.42	450	0	12	4	0	100	Ruby	**121V5263**	**2995**	**481865**	8	9	2.0	8116
	4	7	0.42	450	0	15	5	0	130	Ruby	**121V5263**	**4270**	**481000**	8	8	2.0	8116
	4	7	0.42	450	0	22	10	0	180	Ruby	**121V5263**	**4270**	**486265**	14	14	2.0	8116
	5	10	0.6	750	0	8.5	2	0	100	Ruby	**121V5163**	**2995**	**481865**	8	9	2.0	8116
	5	10	0.6	750	0	10	3.5	0	130	Ruby	**121V5163**	**4270**	**481000**	8	8	2.0	8116
	5	10	0.6	750	0	14	6.5	0	140	Ruby	**121V5163**	**4270**	**486265**	14	14	2.0	8116

For this page	Port size	Orifice (mm)	Kv (l/min)	MOPD (bar)	Fluid Temp (°C)	Amb Temp (°C)
From	1/4''	1.5	1.5	2	0	-10
To	1/4''	5	10	100	180	50

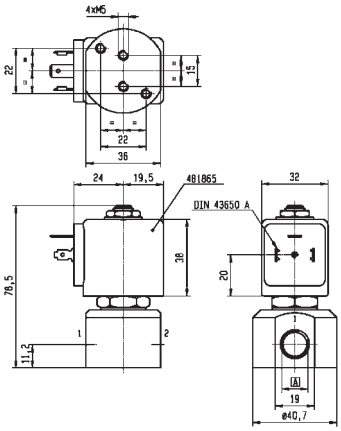

A	G 1/8"
	G 1/4"

Drawing 8116

2/2 HOT WATER AND STEAM VALVES

MAGNALIFT

Commercial Equipment

Industrial Equipment

Medical / Instrumentation

BRASS
PIPE MOUNTING
NORMALLY CLOSED

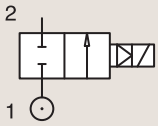

Port size	Orifice Ø	Flow factors			Operating Pressure Differential			Fluid Temp.		Seat Seal	Parker LUCIFER® Valves			Power		Coil Group	Dwg. No.
					Min	Max(MOPD)		Min	Max		Valve Ref.	Housing Ref.	Coil Ref.				
BSP	mm	Kv l/min	KV m³/h	Qn l/min	bar	AC bar	DC bar	°C	°C					AC W	DC W		
3/8"	15	65	3.9	-	0	10	-	0	100	EPDM	221G1303	2995	481865	8	-	2.0	3732
	15	65	3.9	-	0	10	-	0	120	EPDM	221G1303	4270	481000	8	-	2.0	3732
	15	65	3.9	-	0	4	4	0	140	EPDM	221G1303	4270	486265	14	14	2.0	3732
	15	65	3.9	4500	0	10	10	-10	100	FKM	221G1330 [1]	2995	481865	8	9	2.1	3732
	15	65	3.9	4500	0	10	10	-10	120	FKM	221G1330 [1]	-	492070	9	8	2.1	3732
	15	65	3.9	4500	0	10	10	-10	120	FKM	221G1330 [1]	-	492190	11	9	2.1	3732
1/2"	15	65	3.9	-	0	10	-	0	100	EPDM	221G1503	2995	481865	8	-	2.0	3732
	15	65	3.9	-	0	10	-	0	120	EPDM	221G1503	4270	481000	8	-	2.0	3732
	15	65	3.9	-	0	10	7	0	140	EPDM	221G1503	4270	486265	14	14	2.0	3732
3/4"	15	80	4.8	-	0	10	-	0	100	EPDM	221G1603	2995	481865	8	-	2.0	3444
	15	80	4.8	-	0	10	-	0	120	EPDM	221G1603	4270	481000	8	-	2.0	3444
	15	80	4.8	-	0	4	4	0	140	EPDM	221G1603	4270	486265	14	14	2.0	3444
1"	15	80	4.8	-	0	10	-	0	100	EPDM	221G1703	2995	481865	8	-	2.0	3445
	15	80	4.8	-	0	10	-	0	120	EPDM	221G1703	4270	481000	8	-	2.0	3445
	15	80	4.8	-	0	10	10	0	140	EPDM	221G1703	4270	486265	14	14	2.0	3445

Notes:

1. Valves with model number ending in 30 or 31 are only compatible with explosion proof electrical parts shown, or with group 2.1 coils only in DC voltage.

For this page	Port size	Orifice (mm)	Kv (l/min)	MOPD (bar)	Fluid Temp (°C)	Amb Temp (°C)
From	3/8"	15	65	4	-10	-10
To	1"	15	80	10	140	50

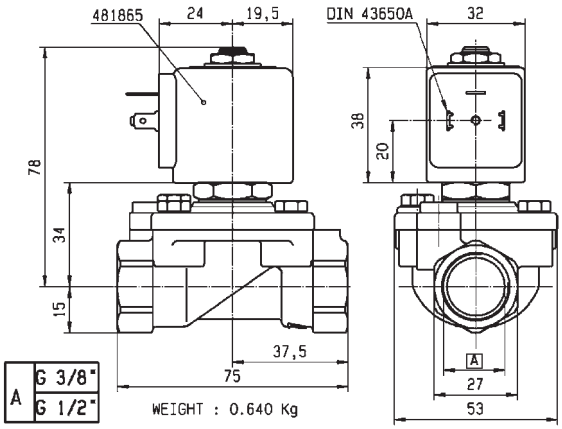

Drawing 3732

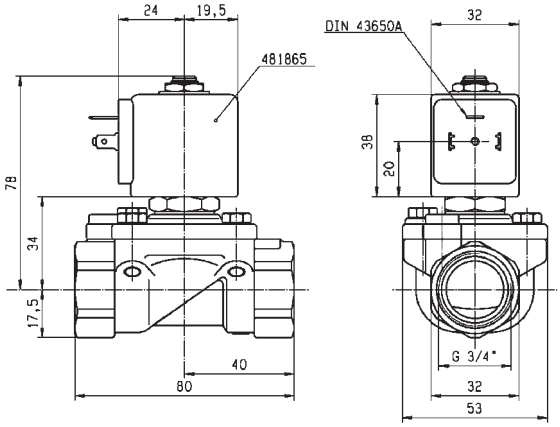

Drawing 3444

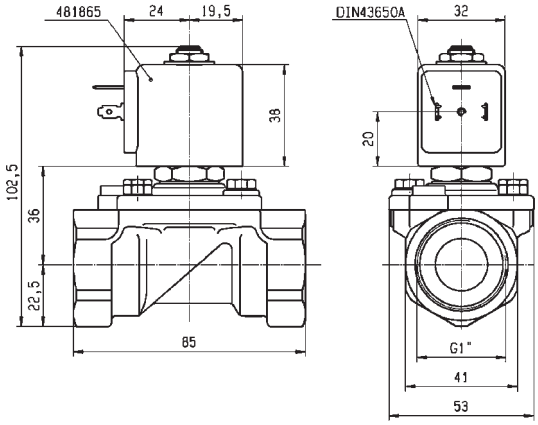

Drawing 3445

2/2 HOT WATER AND STEAM VALVES

PILOT OPERATED

Commercial Equipment

Industrial Equipment

Medical / Instrumentation

BRASS
PIPE MOUNTING
NORMALLY CLOSED

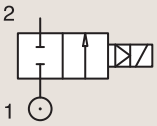

Port size	Orifice Ø	Flow factors			Operating Pressure Differential			Fluid Temp.		Seat Seal	Parker Valves			Power		Coil Group	Dwg. No.
					Min	Max(MOPD)		Min	Max		Valve Order Number	Valve Type	Coil Type				
BSP	mm	Kv l/min	KV m³/h	Qn m³/h	bar	AC bar	DC bar	°C	°C					AC W	DC W		
3/8"	10	22	1.32	-	0.5	16	-	-30	160	PTFE	364520 [1]	PM156.2IR	ZB09	9	-	20.1	041
	16	78	4.7	-	0.5	10	-	-30	180	PTFE	362262	PM135IT	ZH14	14	-	20.2	017
	16	78	4.7	-	0.5	-	10	-30	180	PTFE	362262	PM135IT	ZH16	-	16	20.2	017
1/2"	16	78	4.7	-	0.5	10	-	-30	180	PTFE	362263	PM135AT	ZH14	14	-	20.2	016
	16	78	4.7	-	0.5	-	10	-30	180	PTFE	362263	PM135AT	ZH16	-	16	20.2	016

Notes:

1. Maximum pressure for steam: 6.5 Bar (160°C)

For this page	Port size	Orifice (mm)	Kv (l/min)	MOPD (bar)	Fluid Temp (°C)	Amb Temp (°C)
From	3/8"	10	22	10	-30	-10
To	1/2"	16	78	16	180	50

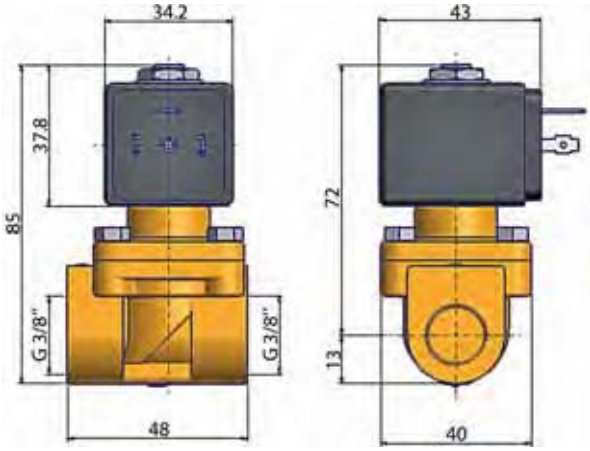

Drawing 041

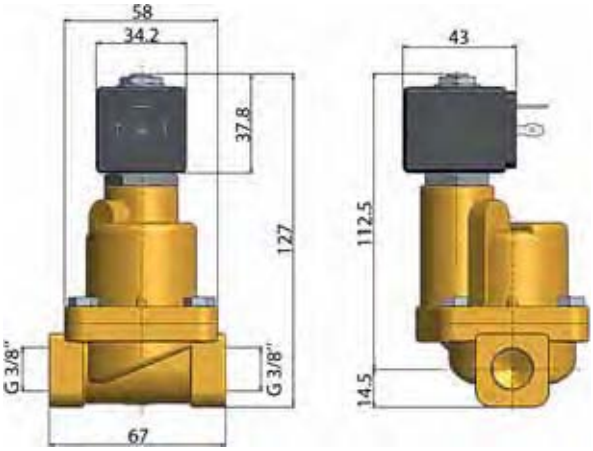

Drawing 017

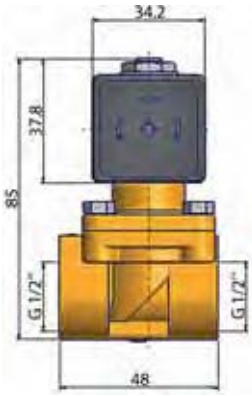

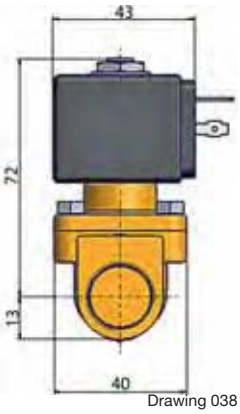

Drawing 038

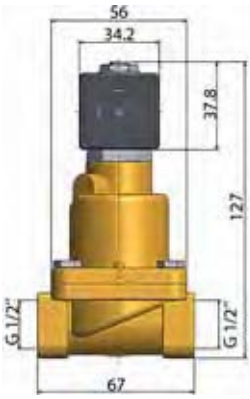

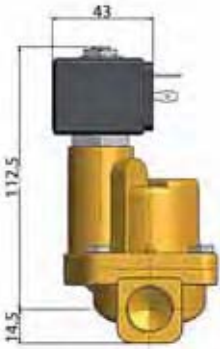

Drawing 016

2/2 HOT WATER AND STEAM VALVES

PILOT OPERATED

BRASS
PIPE MOUNTING
NORMALLY CLOSED

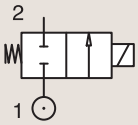

Port size	Orifice Ø	Flow factors			Operating Pressure Differential			Fluid Temp.		Seat Seal	Parker Valves			Power		Coil Group	Dwg. No.
					Min	Max(MOPD)		Min	Max		Valve Order Number	Valve Type	Coil Type				
BSP	mm	Kv l/min	KV m³/h	Qn m³/h	bar	AC bar	DC bar	°C	°C					AC W	DC W		
3/4"	18	37	2.22	-	0.5	14	-	-30	160	PTFE	**364530** [1]	**PM156.2CR**	**ZB09**	9	-	20.1	039
	27	193	11.6	-	0.5	10	-	-30	180	PTFE	**362264**	**PM135CT**	**ZH14**	14	-	20.2	018
	27	193	11.6	-	0.5	-	10	-30	180	PTFE	**362264**	**PM135CT**	**ZH16**	-	16	20.2	018
1"	18	42	2.52	-	0.5	14	-	-30	160	PTFE	**364535** [1]	**PM156.2DR**	**ZB09**	9	-	20.1	040
	27	193	11.6	-	0.5	10	-	-30	180	PTFE	**362265**	**PM135DT**	**ZH14**	14	-	20.2	019
	27	193	11.6	-	0.5	-	10	-30	180	PTFE	**362265**	**PM135DT**	**ZH16**	-	16	20.2	019

Notes:

1. Maximum pressure for steam: 6.5 Bar (160°C)

For this page	Port size	Orifice (mm)	Kv (l/min)	MOPD (bar)	Fluid Temp (°C)	Amb Temp (°C)
From	3/4''	18	37	10	-30	-10
To	1''	27	193	14	180	50

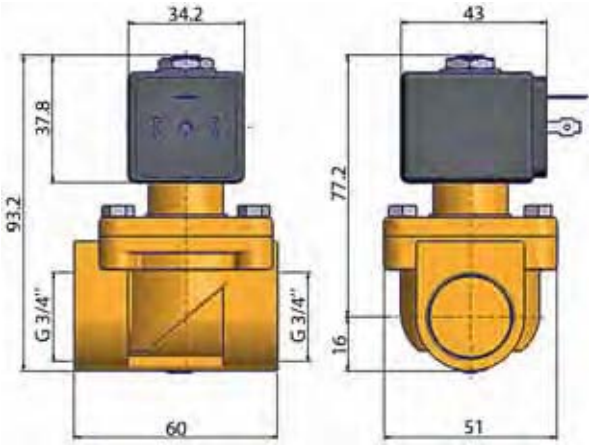

Drawing 039

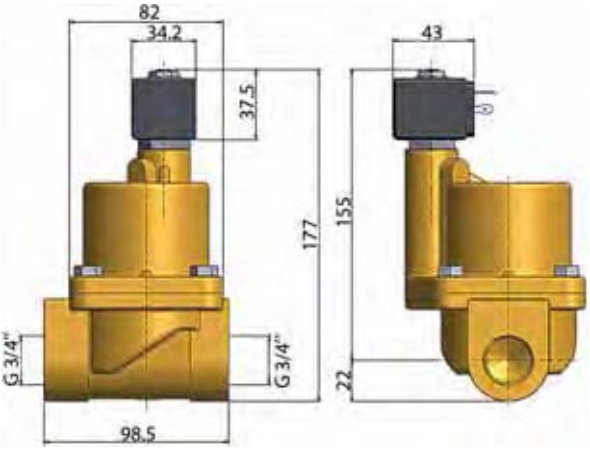

Drawing 018

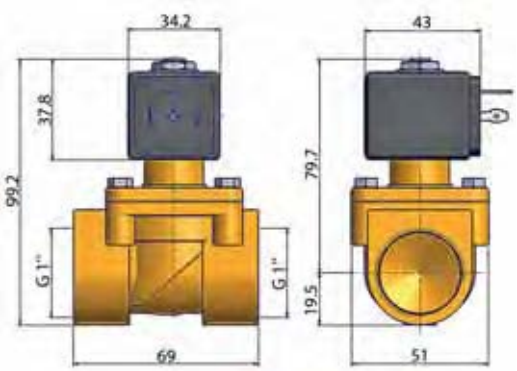

Drawing 040

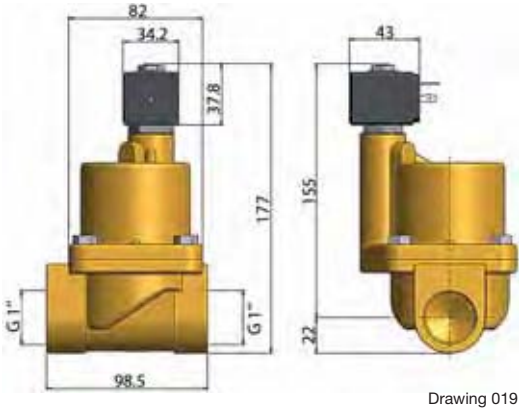

Drawing 019

2/2 HOT WATER AND STEAM VALVES

PILOT OPERATED

BRASS
PIPE MOUNTING
NORMALLY CLOSED

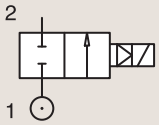

Port size	Orifice Ø	Flow factors			Operating Pressure Differential			Fluid Temp.		Seat Seal	Parker LUCIFER® Valves			Power		Coil Group	Dwg. No.
					Min	Max(MOPD)		Min	Max		Valve Ref.	Housing Ref.	Coil Ref.				
BSP	mm	Kv l/min	KV m³/h	Qn l/min	bar	AC bar	DC bar	°C	°C					AC W	DC W		
1/2"	11	36	2.16	-	0.2	10	4	0	120	EPDM	**E321K1503**	**4270**	**481000**	8	8	2.0	3427
	11	36	2.16	-	0.2	10	-	0	100	EPDM	**E321K1503**	**4270**	**483520**	9	-	2.0	3427
	11	36	2.16	-	0.2	10	-	0	120	EPDM	**E321K1503**	**4270**	**486992**	10	-	2.0	3427

For this page	Port size	Orifice (mm)	Kv (l/min)	MOPD (bar)	Fluid Temp (°C)	Amb Temp (°C)
From	1/2"	11	36	4	0	-10
To	1/2"	11	36	36	10	120	50

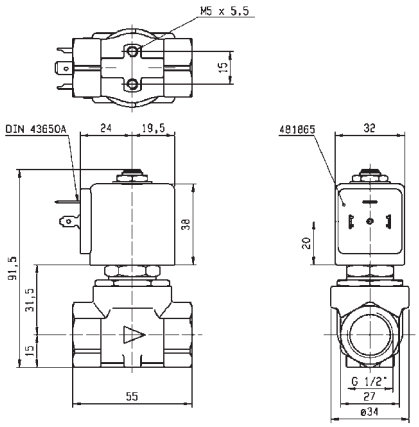

Drawing 3427

VALVES FOR HYDRAULIC OIL AND NEUTRAL LIQUIDS (UP TO 100 BAR)

Oil Water

2/2

Actuation	Body	Function	Port Size	Orifice (mm)	Flow Factor Kv(l/min)	MOPD (bar)	Max Fluid Temp. (°C)	Page Parker Valves	Page Parker LUCIFER® Valves
Direct Operated	Brass/Pipe mounting	Normally Closed	1/8''	1.5 to 2.5	3.5	70	130	-	142
			1/4''	1.2 to 3	4.5	100	130	-	142
			3/8''	4 to 6	12	10	120	-	144
		Normally Open	1/8''	2.5	3.5	30	140	-	144
			1/4''	1.5 to 2.5	3.5	40	140	-	144
	Brass/Sub-base mounting	Normally Closed	5 mm	1.5 to 3	4.5	100	130	-	146
Pilot Operated	Brass/Pipe mounting	Normally Closed	1/4''	8	36	40	140	-	148
			3/8''	11	50	40	140	-	148
			1/2''	15	60	40	140	-	150
		Normally Open	1/4''	8	36	40	140	-	152
			3/8''	11	50	40	140	-	152
			1/2''	15	60	40	140	-	152
	Brass/Sub-base mounting	Normally Closed	14 mm	14	45	40	140	-	154
		Normally Open	14 mm	14	45	40	120	-	154

2/2 VALVES FOR HYDRAULIC OIL AND NEUTRAL LIQUIDS (UP TO 100 BAR)

DIRECT OPERATED

Industrial Equipment

Commercial Equipment

Heating Systems

BRASS
PIPE MOUNTING
NORMALLY CLOSED

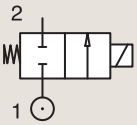

Port size	Orifice Ø	Flow factors			Operating Pressure Differential			Fluid Temp.		Seat Seal	Parker LUCIFER® Valves			Power		Coil Group	Dwg. No.
					Min	Max(MOPD)		Min	Max		Valve Ref.	Housing Ref.	Coil Ref.				
BSP	mm	Kv l/min	KV m³/h	Qn l/min	bar	AC bar	DC bar	°C	°C					AC W	DC W		
1/8"	1.5	1.5	0.09	80	0	60	25	-30	75	PCTFE	E121K14	2995	481865	8	9	2.0	3510
	1.5	1.5	0.09	80	0	70	30	-30	75	PCTFE	E121K14	4270	481000	8	8	2.0	3510
	1.5	1.5	0.09	80	0	70	55	-30	75	PCTFE	E121K14	4270	486265	14	14	2.0	3510
	2.5	3.5	0.21	220	0	28	10	-30	100	Ruby	E121K23	2995	481865	8	9	2.0	3510
	2.5	3.5	0.21	220	0	34	12	-30	130	Ruby	E121K23	4270	481000	8	8	2.0	3510
	2.5	3.5	0.21	220	0	50	22	-30	120	Ruby	E121K23	4270	486265	14	14	2.0	3510
1/4"	1.2	0.85	0.05	50	0	80	36	-30	100	Ruby	E121K65	2995	481865	8	9	2.0	3510
	1.2	0.85	0.05	50	0	100	43	-30	130	Ruby	E121K65	4270	481000	8	8	2.0	3510
	1.2	0.85	0.05	50	0	100	75	-30	120	Ruby	E121K65	4270	486265	14	14	2.0	3510
	1.5	1.5	0.09	80	0	60	25	-30	75	PCTFE	E121K04	2995	481865	8	9	2.0	3510
	1.5	1.5	0.09	80	0	70	30	-30	75	PCTFE	E121K04	4270	481000	8	8	2.0	3510
	1.5	1.5	0.09	80	0	70	55	-30	75	PCTFE	E121K04	4270	486265	14	14	2.0	3510
	1.5	1.5	0.09	80	0	60	25	-30	100	Ruby	E121K67	2995	481865	8	9	2.0	3510
	1.5	1.5	0.09	80	0	75	30	-30	130	Ruby	E121K67	4270	481000	8	8	2.0	3510
	1.5	1.5	0.09	80	0	100	55	-30	120	Ruby	E121K67	4270	486265	14	14	2.0	3510
	2.5	3.5	0.21	220	0	28	10	-30	100	Ruby	E121K63	2995	481865	8	9	2.0	3510
	2.5	3.5	0.21	220	0	34	12	-30	130	Ruby	E121K63	4270	481000	8	8	2.0	3510
	2.5	3.5	0.21	220	0	50	22	-30	120	Ruby	E121K63	4270	486265	14	14	2.0	3510
	3	4.5	0.27	320	0	20	7	-30	75	PCTFE	E121K03	2995	481865	8	9	2.0/3.0	3510
	3	4.5	0.27	320	0	25	8.5	-30	75	PCTFE	E121K03	4270	481000	8	8	2.0/3.0	3510

For this page	Port size	Orifice (mm)	Kv (l/min)	MOPD (bar)	Fluid Temp (°C)	Amb Temp (°C)
From	1/8"	1.2	0.85	7	-30	-10
To	1/4"	3	4.5	100	130	50

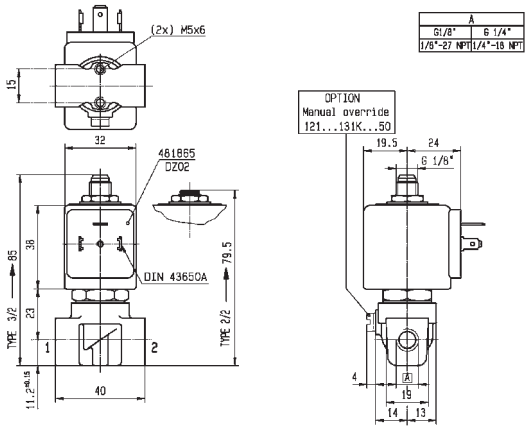

Drawing 3510

2/2 VALVES FOR HYDRAULIC OIL AND NEUTRAL LIQUIDS (UP TO 100 BAR)

DIRECT OPERATED

BRASS PIPE MOUNTING

NORMALLY CLOSED

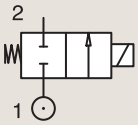

Port size	Orifice Ø	Flow factors			Operating Pressure Differential			Fluid Temp.		Seat Seal	Parker LUCIFER® Valves			Power		Coil Group	Dwg. No.
					Min	Max(MOPD)		Min	Max								
BSP	mm	Kv l/min	KV m³/h	Qn l/min	bar	AC bar	DC bar	°C	°C		Valve Ref.	Housing Ref.	Coil Ref.	AC W	DC W		
1/4"	3	4.5	0.27	320	0	36	15	-30	75	PCTFE	**E121K03**	**4270**	**486265**	14	14	2.0/3.0	3510
	3	4.5	0.27	320	0	20	7	-30	100	Ruby	**E121K64**	**2995**	**481865**	8	9	2.0	3510
	3	4.5	0.27	320	0	25	8.5	-30	130	Ruby	**E121K64**	**4270**	**481000**	8	8	2.0	3510
	3	4.5	0.27	320	0	36	15	-30	120	Ruby	**E121K64**	**4270**	**486265**	14	14	2.0	3510
3/8"	4	7.5	0.45	480	0	10	4	-10	100	FKM	**121K3206**	**2995**	**481865**	8	9	2.0	3551
	4	7.5	0.45	480	0	10	5	-10	120	FKM	**121K3206**	**4270**	**481000**	8	8	2.0	3551
	4	7.5	0.45	480	0	10	10	-10	120	FKM	**121K3206**	**4270**	**486265**	14	14	2.0	3551
	5	11	0.66	750	0	7	2	-10	100	FKM	**121K3106**	**2995**	**481865**	8	9	2.0	3551
	5	11	0.66	750	0	7	2.8	-10	120	FKM	**121K3106**	**4270**	**481000**	8	8	2.0	3551
	5	11	0.66	750	0	7	5	-10	120	FKM	**121K3106**	**4270**	**486265**	14	14	2.0	3551
	6	12	0.72	1100	0	5	1.1	-10	100	FKM	**121K3306**	**2995**	**481865**	8	9	2.0/14.2	3551
	6	12	0.72	1100	0	5	1.5	-10	120	FKM	**121K3306**	**4270**	**481000**	8	8	2.0/14.2	3551
	6	12	0.72	1100	0	5	3	-10	120	FKM	**121K3306**	**4270**	**486265**	14	14	2.0/14.2	3551

BRASS PIPE MOUNTING

NORMALLY OPEN

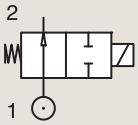

Port size	Orifice Ø	Flow factors			Operating Pressure Differential			Fluid Temp.		Seat Seal	Parker LUCIFER® Valves			Power		Coil Group	Dwg. No.
					Min	Max(MOPD)		Min	Max								
BSP	mm	Kv l/min	KV m³/h	Qn l/min	bar	AC bar	DC bar	°C	°C		Valve Ref.	Housing Ref.	Coil Ref.	AC W	DC W		
1/8"	2.5	3.5	0.21	-	0	30	-	-30	140	Ruby	**122K9363**	**4270**	**481044**	14	-	2.2	3510
	2.5	3.5	0.21	-	0	30	30	-30	140	Ruby	**122K9363**	**4270**	**486265**	14	14	2.2	3510
1/4"	1.5	1.5	0.09	9.6	0	30	30	-10	100	PCTFE	**122K84**	**2995**	**481865**	8	9	2.0	3510
	1.5	1.5	0.09	9.6	0	30	30	-10	100	PCTFE	**122K84**	**4270**	**481000**	8	8	2.0	3510
	1.5	1.5	0.09	9.6	0	30	30	-10	120	PCTFE	**122K84**	**4270**	**486265**	14	14	2.0	3510
	1.5	1.5	0.09	80	0	40	40	-30	100	Ruby	**122K8408**	**2995**	**481865**	8	9	2.1	3510
	1.5	1.5	0.09	80	0	40	40	-30	130	Ruby	**122K8408**	**4270**	**481000**	8	8	2.1	3510
	1.5	1.5	0.09	80	0	40	40	-30	130	Ruby	**122K8408**	**4270**	**486265**	14	14	2.0	3510
	2.5	3.5	0.21	-	0	30	-	-30	140	Ruby	**122K8363**	**4270**	**481044**	14	-	2.2	3510
	2.5	3.5	0.21	-	0	30	30	-30	140	Ruby	**122K8363**	**4270**	**486265**	14	14	2.2	3510

For this page	Port size	Orifice (mm)	Kv (l/min)	MOPD (bar)	Fluid Temp (°C)	Amb Temp (°C)
From	1/8"	1.5	1.5	1.1	-30	-10
To	3/8"	6	12	40	140	50

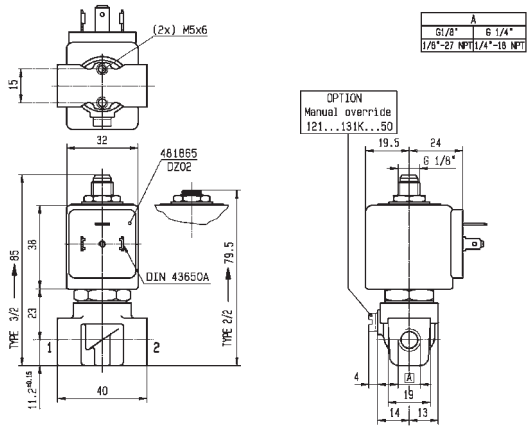

Drawing 3510

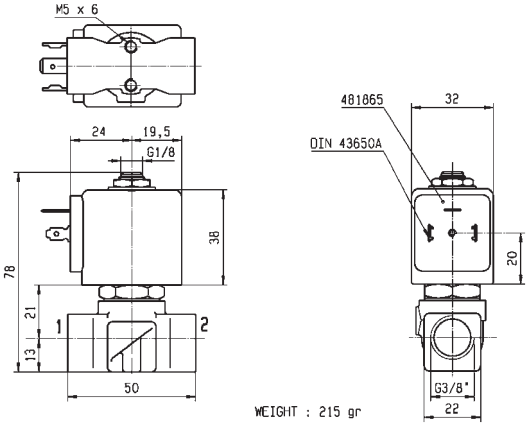

Drawing 3551

2/2 VALVES FOR HYDRAULIC OIL AND NEUTRAL LIQUIDS (UP TO 100 BAR)

DIRECT OPERATED

BRASS

SUB-BASE MOUNTING

NORMALLY CLOSED

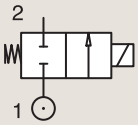

Port size	Orifice Ø	Flow factors			Operating Pressure Differential			Fluid Temp.		Seat Seal	Parker LUCIFER® Valves			Power		Coil Group	Dwg. No.
					Min	Max(MOPD)		Min	Max								
	mm	Kv l/min	KV m³/h	Qn l/min	bar	AC bar	DC bar	°C	°C		Valve Ref.	Housing Ref.	Coil Ref.	AC W	DC W		
SB	1.5	1.5	0.09	80	0	60	25	-30	100	Ruby	**121F67**	**2995**	**481865**	8	9	2.0	3509
	1.5	1.5	0.09	80	0	75	30	-30	130	Ruby	**121F67**	**4270**	**481000**	8	8	2.0	3509
	1.5	1.5	0.09	80	0	100	55	-30	120	Ruby	**121F67**	**4270**	**486265**	14	14	2.0	3509
	1.5	1.5	0.09	80	0	60	25	-30	75	PCTFE	**E121F44**	**2995**	**481865**	8	9	2.0	3509
	1.5	1.5	0.09	80	0	70	30	-30	75	PCTFE	**E121F44**	**4270**	**481000**	8	8	2.0	3509
	1.5	1.5	0.09	80	0	70	55	-30	75	PCTFE	**E121F44**	**4270**	**486265**	14	14	2.0	3509
	2.5	3.5	0.21	220	0	14	10	-10	100	FKM	**121F4706**	**2995**	**481865**	8	9	2.0	3509
	2.5	3.5	0.21	220	0	14	9	-10	120	FKM	**121F4706**	**4270**	**481000**	8	8	2.0	3509
	2.5	3.5	0.21	220	0	14	14	-10	120	FKM	**121F4706**	**4270**	**486265**	14	14	2.0	3509
	2.5	3.5	0.21	220	0	28	10	-30	100	Ruby	**121F63**	**2995**	**481865**	8	9	2.0	3509
	2.5	3.5	0.21	220	0	34	12	-30	130	Ruby	**121F63**	**4270**	**481000**	8	8	2.0	3509
	2.5	3.5	0.21	220	0	50	22	-30	120	Ruby	**121F63**	**4270**	**486265**	14	14	2.0	3509
	3	4.5	0.27	320	0	20	7	-30	100	Ruby	**121F64**	**2995**	**481865**	8	9	2.0	3509
	3	4.5	0.27	320	0	25	8.5	-30	130	Ruby	**121F64**	**4270**	**481000**	8	8	2.0	3509
	3	4.5	0.27	320	0	36	15	-30	120	Ruby	**121F64**	**4270**	**486265**	14	14	2.0	3509
	3	4.5	0.27	320	0	20	7	-30	75	PCTFE	**E121F43**	**2995**	**481865**	8	9	2.0	3509
	3	4.5	0.27	320	0	25	8.5	-30	75	PCTFE	**E121F43**	**4270**	**481000**	8	8	2.0	3509
	3	4.5	0.27	320	0	36	15	-30	75	PCTFE	**E121F43**	**4270**	**486265**	14	14	2.0	3509

For this page	Port size	Orifice (mm)	Kv (l/min)	MOPD (bar)	Fluid Temp (°C)	Amb Temp (°C)
From	5 mm	1.5	1.5	7	-30	-10
To	5 mm	3	4.5	100	130	50

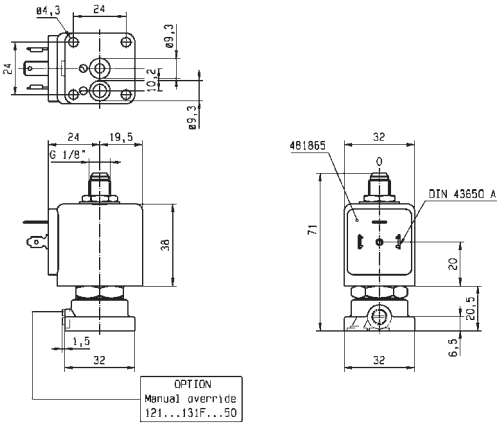

Drawing 3509

2/2 VALVES FOR HYDRAULIC OIL AND NEUTRAL LIQUIDS (UP TO 100 BAR)

PILOT OPERATED

Commercial Equipment

Industrial Equipment

Heating Systems

BRASS
PIPE MOUNTING
NORMALLY CLOSED

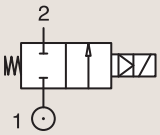

Port size	Orifice Ø	Flow factors			Operating Pressure Differential			Fluid Temp.		Seat Seal	Parker LUCIFER® Valves			Power		Coil Group	Dwg. No.
					Min	Max(MOPD)		Min	Max								
BSP	mm	Kv l/min	KV m³/h	Qn l/min	bar	AC bar	DC bar	°C	°C		Valve Ref.	Housing Ref.	Coil Ref.	AC W	DC W		
1/4"	8	36	2.16	1600	0.3	40	25	-10	100	NBR	E321H11 [12]	2995	481865	8	9	2.0	3523
	8	36	2.16	1600	0.3	40	30	-10	100	NBR	E321H11 [12]	4270	481000	8	8	2.0	3523
	8	36	2.16	1600	0.3	40	40	-10	100	NBR	E321H11 [12]	4270	486265	14	14	2.0	3523
	8	36	2.16	-	0.3	40	25	-10	100	FKM	E321H21 [12]	2995	481865	8	9	2.0	3523
	8	36	2.16	-	0.3	40	30	-10	120	FKM	E321H21 [12]	4270	481000	8	8	2.0	3523
	8	36	2.16	-	0.3	40	40	-10	140	FKM	E321H21 [12]	4270	486265	14	14	2.0	3523
3/8"	11	50	3	2800	0.3	40	25	-10	100	NBR	E321H13 [12]	2995	481865	8	9	2.0	3521
	11	50	3	2800	0.3	40	30	-10	100	NBR	E321H13 [12]	4270	481000	8	8	2.0	3521
	11	50	3	2800	0.3	40	40	-10	100	NBR	E321H13 [12]	4270	486265	14	14	2.0	3521
	11	50	3	-	0.3	40	25	-10	100	FKM	E321H23 [12]	2995	481865	8	9	2.0	3521
	11	50	3	-	0.3	40	30	-10	120	FKM	E321H23 [12]	4270	481000	8	8	2.0	3521
	11	50	3	-	0.3	40	40	-10	140	FKM	E321H23 [12]	4270	486265	14	14	2.0	3521
	11	36	2.16	-	0.2	20	-	-10	100	Ruby	E321K63	2995	483510	9	-	2.0	3429
	11	36	2.16	-	0.2	30	-	-10	140	Ruby	E321K63	4270	488553	9	-	2.0	3429
	11	36	2.16	-	0.2	4	4	-10	120	Ruby	E321K63	-	492190	11	9	2.0	3429

Notes:

1. Minimum pressure differential = 0.3 bar for opening and 0 bar for closing
2. Pilot seat disc in synthetic Ruby

For this page	Port size	Orifice (mm)	Kv (l/min)	MOPD (bar)	Fluid Temp (°C)	Amb Temp (°C)
From	1/4"	8	36	3	-10	-10
To	3/8"	11	50	40	140	50

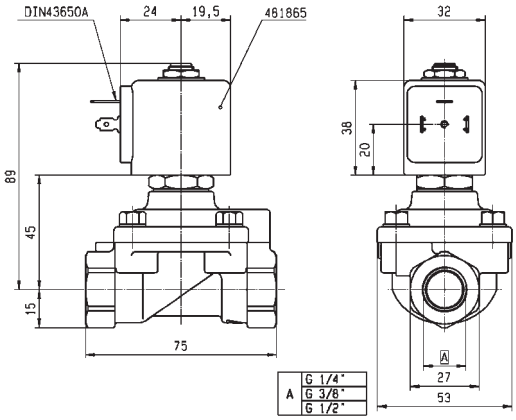

Drawing 3523

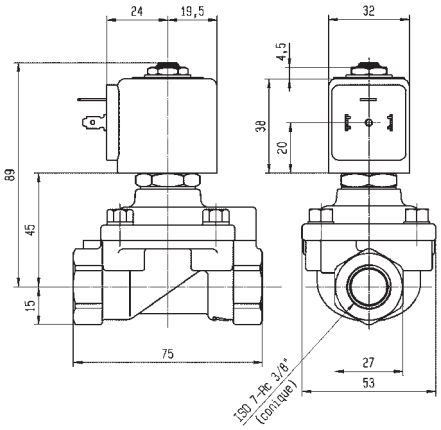

Drawing 3521

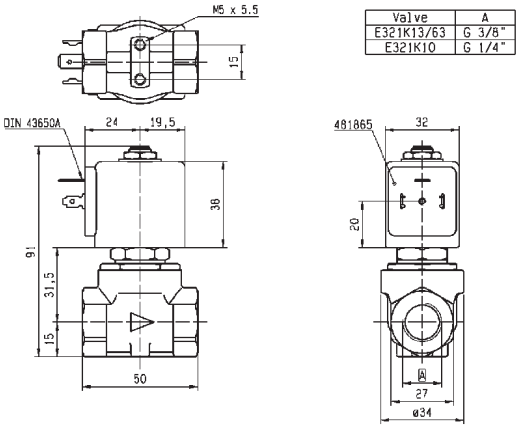

Valve	A
E321K13/63	G 3/8"
E321K10	G 1/4"

Drawing 3429

2/2 VALVES FOR HYDRAULIC OIL AND NEUTRAL LIQUIDS (UP TO 100 BAR)

PILOT OPERATED

BRASS

PIPE MOUNTING

NORMALLY CLOSED

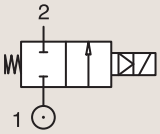

Port size	Orifice Ø	Flow factors			Operating Pressure Differential			Fluid Temp.		Seat Seal	Parker LUCIFER® Valves			Power		Coil Group	Dwg. No.
					Min	Max(MOPD)		Min	Max		Valve Ref.	Housing Ref.	Coil Ref.				
BSP	mm	Kv l/min	KV m³/h	Qn l/min	bar	AC bar	DC bar	°C	°C					AC W	DC W		
1/2"	15	60	3.6	3150	0.3	40	25	-10	100	NBR	E321H15 12	2995	481865	8	9	2.0	3522
	15	60	3.6	3150	0.3	40	30	-10	100	NBR	E321H15 12	4270	481000	8	8	2.0	3522
	15	60	3.6	3150	0.3	40	40	-10	100	NBR	E321H15 12	4270	486265	14	14	2.0	3522
	15	60	3.6	-	0.3	40	25	-10	100	FKM	E321H25 12	2995	481865	8	9	2.0/14.2	3522
	15	60	3.6	-	0.3	40	30	-10	120	FKM	E321H25 12	-	483371	8	8	2.0/14.2	3522
	15	60	3.6	-	0.3	40	40	-10	140	FKM	E321H25 12	4270	486265	14	14	2.0/14.2	3522

Notes:

1. Minimum pressure differential = 0.3 bar for opening and 0 bar for closing
2. Pilot seat disc in synthetic Ruby

For this page	Port size	Orifice (mm)	Kv (l/min)	MOPD (bar)	Fluid Temp (°C)	Amb Temp (°C)
From	1/2"	15	60	25	-10	-10
To	1/2"	15	60	40	140	50

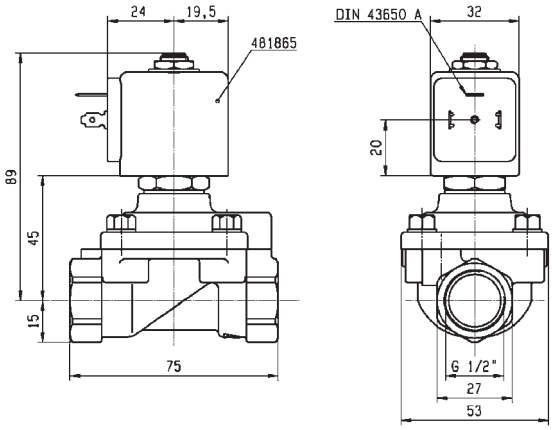

Drawing 3522

2/2 VALVES FOR HYDRAULIC OIL AND NEUTRAL LIQUIDS (UP TO 100 BAR)

PILOT OPERATED

BRASS

PIPE MOUNTING

NORMALLY OPEN

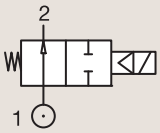

Port size	Orifice Ø	Flow factors			Operating Pressure Differential			Fluid Temp.		Seat Seal	Parker LUCIFER® Valves			Power		Coil Group	Dwg. No.
					Min	Max(MOPD)		Min	Max								
BSP	mm	Kv l/min	KV m³/h	Qn l/min	bar	AC bar	DC bar	°C	°C		Valve Ref.	Housing Ref.	Coil Ref.	AC W	DC W		
1/4"	8	36	2.16	-	0.3	40	40	-10	100	FKM	322H7106 12	2995	481865	8	9	2.0/14.1	3523
	8	36	2.16	-	0.3	40	40	-10	120	FKM	322H7106 12	4270	481000	8	8	2.0/14.1	3523
	8	36	2.16	-	0.3	40	40	-10	140	FKM	322H7106 12	4270	486265	14	14	2.0/14.1	3523
3/8"	11	50	3	3240	0.3	40	40	-10	75	NBR	322H73 12	2995	481865	8	9	2.0	3523
	11	50	3	3240	0.3	40	40	-10	75	NBR	322H73 12	4270	481000	8	8	2.0	3523
	11	50	3	3240	0.3	40	40	-10	75	NBR	322H73 12	4270	486265	14	14	2.0	3523
	11	50	3	-	0.3	40	40	-10	100	FKM	322H7306 12	2995	481865	8	9	2.0/14.1	3523
	11	50	3	-	0.3	40	40	-10	100	FKM	322H7306 12	4270	481000	8	8	2.0/14.1	3523
	11	50	3	-	0.3	40	40	-10	140	FKM	322H7306 12	4270	486265	14	14	2.0/14.1	3523
1/2"	15	60	3.6	3890	0.3	20	20	-10	100	FKM	322G7506 1	2995	481865	8	9	2.0	3522
	15	60	3.6	3890	0.3	20	20	-10	100	FKM	322G7506 1	4270	481000	8	8	2.0	3522
	15	60	3.6	3890	0.3	20	20	-10	100	FKM	322G7506 1	4270	486265	14	14	2.0	3522
	15	60	3.6	3890	0.3	40	40	-10	100	NBR	322H75 12	2995	481865	8	9	2.0	3522
	15	60	3.6	3890	0.3	40	40	-10	100	NBR	322H75 12	4270	481000	8	8	2.0	3522
	15	60	3.6	3890	0.3	40	40	-10	100	NBR	322H75 12	4270	486265	14	14	2.0	3522
	15	60	3.6	-	0.3	40	40	-10	100	FKM	322H7506 12	2995	481865	8	9	2.0/14.1	3522
	15	60	3.6	-	0.3	40	40	-10	120	FKM	322H7506 12	4270	481000	8	8	2.0/14.1	3522
	15	60	3.6	-	0.3	40	40	-10	140	FKM	322H7506 12	4270	486265	14	14	2.0/14.1	3522

Notes:

1. Minimum pressure differential = 0.3 bar for opening and 0 bar for closing
2. Pilot seat disc in synthetic Ruby

For this page	Port size	Orifice (mm)	Kv (l/min)	MOPD (bar)	Fluid Temp (°C)	Amb Temp (°C)
From	1/4"	8	36	20	-10	-10
To	1/2"	15	60	40	140	50

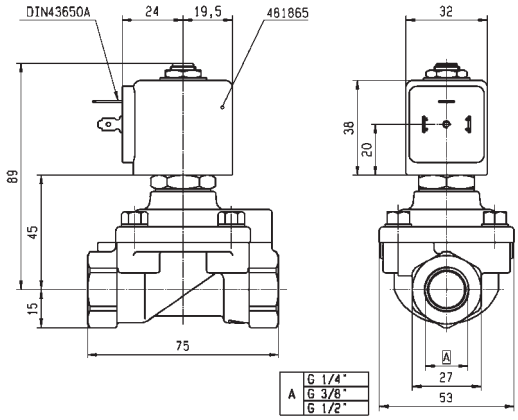

Drawing 3523

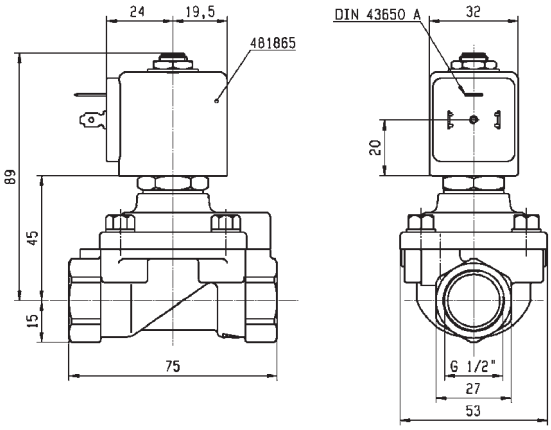

Drawing 3522

2/2 VALVES FOR HYDRAULIC OIL AND NEUTRAL LIQUIDS (UP TO 100 BAR)

PILOT OPERATED

BRASS
SUB-BASE MOUNTING
NORMALLY CLOSED

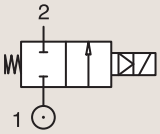

Port size	Orifice Ø	Flow factors			Operating Pressure Differential			Fluid Temp.		Seat Seal	Parker LUCIFER® Valves			Power		Coil Group	Dwg. No.
					Min	Max(MOPD)		Min	Max								
BSP	mm	Kv l/min	KV m³/h	Qn l/min	bar	AC bar	DC bar	°C	°C		Valve Ref.	Housing Ref.	Coil Ref.	AC W	DC W		
SB	14	45	2.7	-	0.3	40	25	-10	100	FKM	E321F3202 12	2995	481865	8	9	2.0	3520
	14	45	2.7	-	0.3	40	30	-10	120	FKM	E321F3202 12	4270	481000	8	8	2.0	3520
	14	45	2.7	-	0.3	40	40	-10	140	FKM	E321F3202 12	4270	486265	14	14	2.0	3520

Notes:

1. Minimum pressure differential = 0.3 bar for opening and 0 bar for closing
2. Pilot seat disc in synthetic Ruby

BRASS
SUB-BASE MOUNTING
NORMALLY OPEN

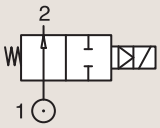

Port size	Orifice Ø	Flow factors			Operating Pressure Differential			Fluid Temp.		Seat Seal	Parker LUCIFER® Valves			Power		Coil Group	Dwg. No.
					Min	Max(MOPD)		Min	Max								
BSP	mm	Kv l/min	KV m³/h	Qn l/min	bar	AC bar	DC bar	°C	°C		Valve Ref.	Housing Ref.	Coil Ref.	AC W	DC W		
SB	14	45	2.7	-	0.3	40	40	0	100	FKM	322F7206 12	2995	481865	8	9	2.1/14.1	3520
	14	45	2.7	-	0.3	40	40	0	120	FKM	322F7206 12	4270	481000	8	8	2.1/14.1	3520

Notes:

1. Minimum pressure differential = 0.3 bar for opening and 0 bar for closing
2. Pilot seat disc in synthetic Ruby

For this page	Port size	Orifice (mm)	Kv (l/min)	MOPD (bar)	Fluid Temp (°C)	Amb Temp (°C)
From	14 mm	14	45	25	-10	-10
To	14 mm	14	45	40	140	50

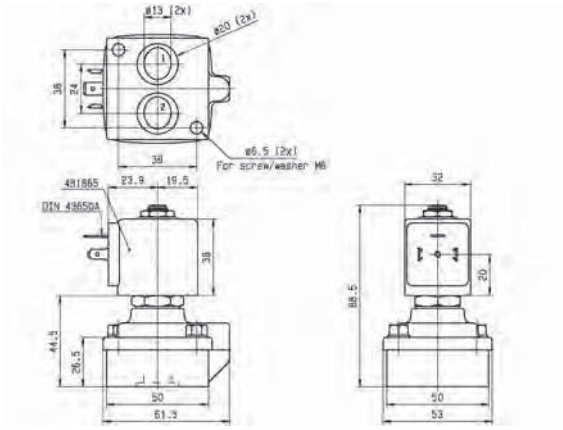

Drawing 3520

HIGH CORROSION RESISTANT VALVES (303 STAINLESS STEEL)

2/2

Actuation	Body	Function	Port Size	Orifice (mm)	Flow Factor Kv(l/min)	MOPD (bar)	Max Fluid Temp. (°C)	Page Parker Valves	Page Parker LUCIFER® Valves
Direct Operated	303 Stainless St./Pipe mounting	Normally Closed	1/4''	1.5 to 5	10	100	180	-	158
		Normally Open	1/4''	2.5	3	12	120	-	162

2/2 HIGH CORROSION RESISTANT VALVES (303 STAINLESS STEEL)

DIRECT OPERATED

Process

Commercial Equipment

303 STAINLESS ST. PIPE MOUNTING

NORMALLY CLOSED

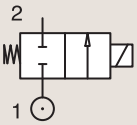

Port size	Orifice Ø	Flow factors			Operating Pressure Differential			Fluid Temp.		Seat Seal	Parker LUCIFER® Valves			IS	Power		Coil Group	Dwg. No.
					Min	Max(MOPD)		Min	Max		Valve Ref.	Housing Ref.	Coil Ref.					
BSP	mm	Kv l/min	KV m³/h	Qn l/min	bar	AC bar	DC bar	°C	°C						AC W	DC W		
1/4"	1.5	1.5	0.09	80	0	20	20	-10	100	FKM	121V5406	2995	481865		8	9	2.0	8116
	1.5	1.5	0.09	80	0	20	20	-10	120	FKM	121V5406	4270	481000		8	8	2.0	8116
	1.5	1.5	0.09	80	0	60	25	0	100	Ruby	121V5463 [1]	2995	481865		8	9	2.0	8116
	1.5	1.5	0.09	80	0	75	30	0	130	Ruby	121V5463 [1]	4270	481000		8	8	2.0	8116
	1.5	1.5	0.09	80	0	100	55	0	140	Ruby	121V5463 [1]	4270	486265		14	14	2.0	8116
	1.5	1.5	0.09	80	0	-	8	-20	75	PUR	121V5497 [2]	2995	482740		-	1.6	3.0/6.0/8.0	8024
	1.5	1.5	0.09	80	0	10	10	-20	75	PUR	121V5497 [2]	-	495900		2.5	2	3.0/6.0/8.0	8024
	1.5	1.5	0.09	80	0	-	10	-20	75	PUR	121V5497 [2]	-	495910	*	-	0.3 to 3	3.0/6.0/8.0	8024
	1.5	1.5	0.09	80	0	-	8	-20	75	PUR	121V5497 [2]	2995	496125		-	1.6	3.0/6.0/8.0	8024
	2.5	3.5	0.21	220	0	14	7	-10	100	FKM	121V5706	2995	481865		8	9	2.0	8116
	2.5	3.5	0.21	220	0	14	9	-10	120	FKM	121V5706	4270	481000		8	8	2.0	8116
	2.5	3.5	0.21	220	0	14	14	-10	120	FKM	121V5706	4270	486265		14	14	2.0	8116
	2.5	3.5	0.21	220	0	28	10	0	100	Ruby	121V5763 [1]	2995	481865		8	9	2.0	8116
	2.5	3.5	0.21	220	0	34	12	0	130	Ruby	121V5763 [1]	4270	481000		8	8	2.0	8116
	2.5	3.5	0.21	220	0	50	22	0	140	Ruby	121V5763 [1]	4270	486265		14	14	2.0	8116
	3	4.5	0.27	315	0	10	7	-10	100	FKM	121V5306	2995	481865		8	9	2.0	8116
	3	4.5	0.27	315	0	10	8.5	-10	120	FKM	121V5306	4270	481000		8	8	2.0	8116
	3	4.5	0.27	315	0	10	10	-10	120	FKM	121V5306	4270	486265		14	14	2.0	8116
	3	4.5	0.27	315	0	20	7	0	100	Ruby	121V5363 [1]	2995	481865		8	9	2.0	8116
	3	4.5	0.27	315	0	25	8.5	0	130	Ruby	121V5363 [1]	4270	481000		8	8	2.0	8116
	3	4.5	0.27	315	0	36	15	0	140	Ruby	121V5363 [1]	4270	486265		14	14	2.0	8116

Notes:

1. Valve only compatible with hydraulic oil and neutral liquids
2. Valve compatible with water only up to 40°C

For this page	Port size	Orifice (mm)	Kv (l/min)	MOPD (bar)	Fluid Temp (°C)	Amb Temp (°C)
From	1/4"	1.5	1.5	7	-20	-20
To	1/4"	3	4.5	100	140	50

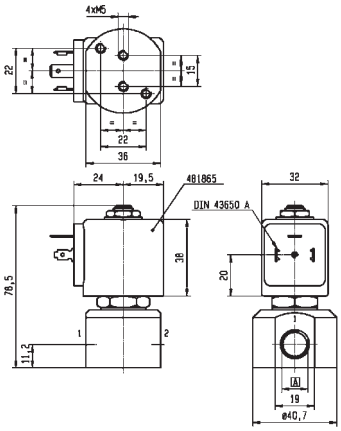

A	G 1/8"
	G 1/4"

Drawing 8116

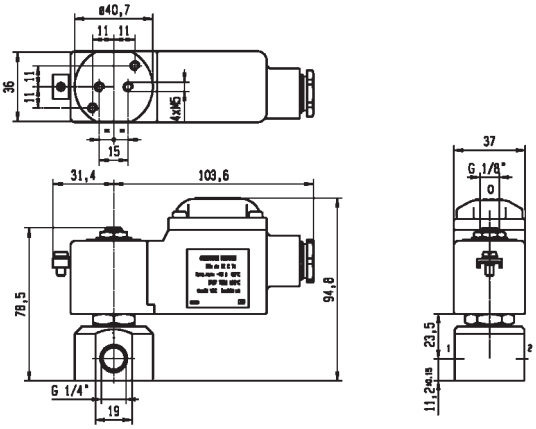

Drawing 8024

2/2 HIGH CORROSION RESISTANT VALVES (303 STAINLESS STEEL)

DIRECT OPERATED

303 STAINLESS ST. PIPE MOUNTING

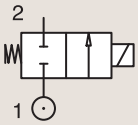

NORMALLY CLOSED

Port size BSP	Orifice Ø mm	Flow factors Kv l/min	KV m³/h	Qn l/min	Operating Pressure Differential Min bar	Max(MOPD) AC bar	DC bar	Fluid Temp. Min °C	Max °C	Seat Seal	Parker LUCIFER® Valves Valve Ref.	Housing Ref.	Coil Ref.	IS	Power AC W	DC W	Coil Group	Dwg. No.
1/4"	3	3.5	0.21	220	0	-	2	-20	75	PUR	**121V5397** [2]	**2995**	**482740**		-	1.6	3.0/6.0/8.0	8024
	3	3.5	0.21	220	0	4.5	4	-20	75	PUR	**121V5397** [2]	**-**	**495900**		2.5	2	3.0/6.0/8.0	8024
	3	3.5	0.21	220	0	-	4.5	-20	75	PUR	**121V5397** [2]	**-**	**495910**	*	-	0.3 to 3	3.0/6.0/8.0	8024
	3	3.5	0.21	220	0	-	2	-20	75	PUR	**121V5397** [2]	**2995**	**496125**		-	1.6	3.0/6.0/8.0	8024
	4	7	0.42	450	0	10	4	-10	100	FKM	**121V5206**	**2995**	**481865**		8	9	2.0	8116
	4	7	0.42	450	0	10	5	-10	120	FKM	**121V5206**	**4270**	**481000**		8	8	2.0	8116
	4	7	0.42	450	0	10	10	-10	120	FKM	**121V5206**	**4270**	**486265**		14	14	2.0	8116
	4	7	0.42	450	0	3.5	3.5	0	100	PTFE	**121V5212** [1]	**2995**	**481865**		8	9	2.0	8116
	4	7	0.42	450	0	3.5	3.5	0	130	PTFE	**121V5212** [1]	**4270**	**481000**		8	8	2.0	8116
	4	7	0.42	450	0	3.5	3.5	0	130	PTFE	**121V5212** [1]	**4270**	**486265**		14	14	2.0	8116
	4	7	0.42	450	0	12	4	0	100	Ruby	**121V5263** [1]	**2995**	**481865**		8	9	2.0	8116
	4	7	0.42	450	0	15	5	0	130	Ruby	**121V5263** [1]	**4270**	**481000**		8	8	2.0	8116
	4	7	0.42	450	0	22	10	0	180	Ruby	**121V5263** [1]	**4270**	**486265**		14	14	2.0	8116
	5	10	0.6	750	0	7	2	-10	100	FKM	**121V5106**	**2995**	**481865**		8	9	2.0	8116
	5	10	0.6	750	0	7	2.8	-10	120	FKM	**121V5106**	**4270**	**481000**		8	8	2.0	8116
	5	10	0.6	750	0	7	5	-10	120	FKM	**121V5106**	**4270**	**486265**		14	14	2.0	8116
	5	10	0.6	-	0	2.8	2	0	100	PTFE	**121V5112** [1]	**2995**	**481865**		8	9	2.0	8116
	5	10	0.6	-	0	2.8	2.8	0	130	PTFE	**121V5112** [1]	**4270**	**481000**		8	8	2.0	8116
	5	10	0.6	-	0	2.8	2.8	0	130	PTFE	**121V5112** [1]	**4270**	**486265**		14	14	2.0	8116
	5	10	0.6	750	0	8.5	2	0	100	Ruby	**121V5163** [1]	**2995**	**481865**		8	9	2.0	8116
	5	10	0.6	750	0	10	3.5	0	130	Ruby	**121V5163** [1]	**4270**	**481000**		8	8	2.0	8116
	5	10	0.6	750	0	14	6.5	0	140	Ruby	**121V5163** [1]	**4270**	**486265**		14	14	2.0	8116

Notes:

1. Valve only compatible with hydraulic oil and neutral liquids
2. Valve compatible with water only up to 40°C

For this page	Port size	Orifice (mm)	Kv (l/min)	MOPD (bar)	Fluid Temp (°C)	Amb Temp (°C)
From	1/4"	3	3.5	2	-20	-20
To	1/4"	5	10	22	180	50

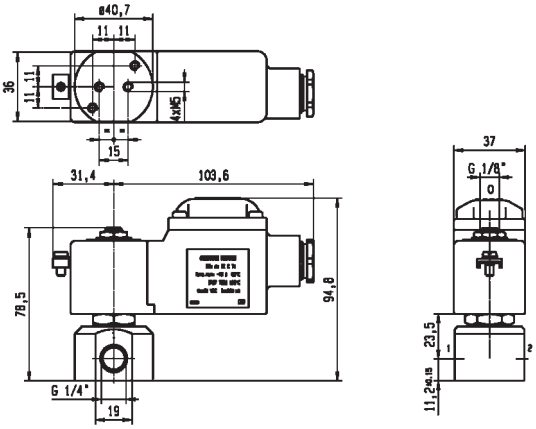

Drawing 8024

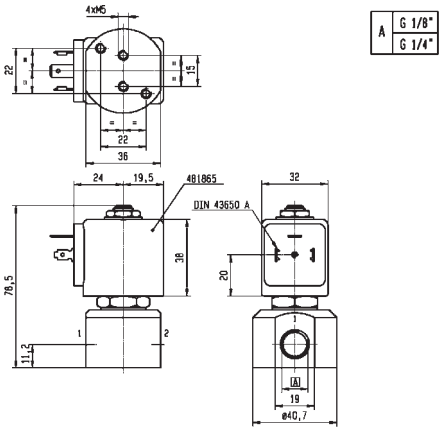

Drawing 8116

2/2 HIGH CORROSION RESISTANT VALVES (303 STAINLESS STEEL)

DIRECT OPERATED

303 STAINLESS ST.
PIPE MOUNTING

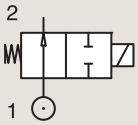

NORMALLY OPEN

Port size	Orifice Ø	Flow factors			Operating Pressure Differential			Fluid Temp.		Seat Seal	Parker LUCIFER® Valves			Power		Coil Group	Dwg. No.
					Min	Max(MOPD)		Min	Max								
BSP	mm	Kv l/min	KV m³/h	Qn l/min	bar	AC bar	DC bar	°C	°C		Valve Ref.	Housing Ref.	Coil Ref.	AC W	DC W		
1/4''	2.5	3	0.18	180	0	12	12	-30	100	FKM	**122V8306**	**2995**	**481865**	8	9	2.1	8116
	2.5	3	0.18	180	0	12	12	-30	120	FKM	**122V8306**	**4270**	**481000**	8	8	2.1	8116

For this page	Port size	Orifice (mm)	Kv (l/min)	MOPD (bar)	Fluid Temp (°C)	Amb Temp (°C)
From	1/4''	2.5	3	12	-30	-10
To	1/4''	2.5	3	12	120	50

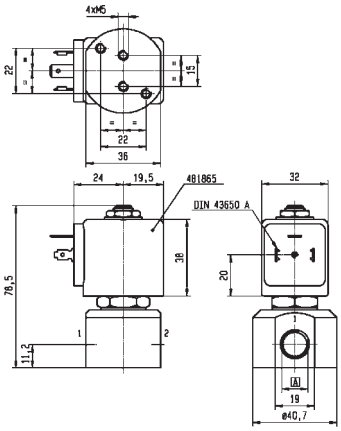

A	G 1/8"
	G 1/4"

Drawing 8116

HIGH CORROSION RESISTANT VALVES (316L STAINLESS STEEL)

Oil Water Air

2/2

Actuation	Body	Function	Port Size	Orifice (mm)	Flow Factor Kv(l/min)	MOPD (bar)	Max Fluid Temp. (°C)	Page Parker Valves	Page Parker LUCIFER® Valves
Direct Operated	316L Stainless St./Pipe Mounting	Normally Closed	1/4''	1.5 to 3.5	2.3	20	140	**166**	-
			1/8''	1.5 to 2.5	2.3	20	140	**166**	-
			1/2''	5 to 6.2	13	4	140	**168**	-
			3/8''	5 to 6.2	13	4	140	**168**	-
			1/4''	1	0.6	98	75	-	**170**
Magnalift	316L Stainless St./Pipe Mounting	Normally Closed	1/2''	15	50	10	140	**172**	-
			3/4''	24	95	10	140	**172**	-
			3/8''	15	40	10	140	**172**	-
			1''	24	105	10	140	**174**	-

2/2 HIGH CORROSION RESISTANT VALVES (316L STAINLESS STEEL)

DIRECT OPERATED

Commercial Equipment

Medical / Instrumentation

Industrial Equipment

316L STAINLESS ST. PIPE MOUNTING

NORMALLY CLOSED

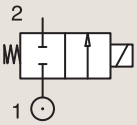

Port size	Orifice Ø	Flow factors			Operating Pressure Differential			Fluid Temp.		Seat Seal	Parker Valves			Power		Coil Group	Dwg. No.
					Min	Max(MOPD)		Min	Max								
BSP	mm	Kv l/min	KV m³/h	Qn l/min	bar	AC bar	DC bar	°C	°C		Valve Ref.	Housing Ref.	Coil Ref.	AC W	DC W		
1/8"	1.5	1	0.06	-	0	20	-	-10	140	FKM	**201LG1GVG2**	**-**	**WB4.5**	4.5	-	1.1/1.3	074
	1.5	1	0.06	-	0	-	10	-10	140	FKM	**201LG1GVG2**	**-**	**WB5.0**	-	5	1.1/1.3	074
	2	1.8	0.11	-	0	15	-	-10	140	FKM	**201LG1JVG2**	**-**	**WB4.5**	4.5	-	1.1/1.3	074
	2	1.8	0.11	-	0	-	7	-10	140	FKM	**201LG1JVG2**	**-**	**WB5.0**	-	5	1.1/1.3	074
	2.5	2.3	0.14	-	0	10	-	-10	140	FKM	**201LG1LVG2**	**-**	**WB4.5**	4.5	-	1.1/1.3	074
	2.5	2.3	0.14	-	0	-	4	-10	140	FKM	**201LG1LVG2**	**-**	**WB5.0**	-	5	1.1/1.3	074
1/4"	1.5	1	0.06	-	0	20	-	-10	140	FKM	**201LG2GVG2**	**-**	**WB4.5**	4.5	-	1.1/1.3	075
	1.5	1	0.06	-	0	-	10	-10	140	FKM	**201LG2GVG2**	**-**	**WB5.0**	-	5	1.1/1.3	075
	2	1.8	0.11	-	0	15	-	-10	140	FKM	**201LG2JVG2**	**-**	**WB4.5**	4.5	-	1.1/1.3	075
	2	1.8	0.11	-	0	-	7	-10	140	FKM	**201LG2JVG2**	**-**	**WB5.0**	-	5	1.1/1.3	075
	2.5	2.3	0.14	-	0	10	-	-10	140	FKM	**201LG2LVG2**	**-**	**WB4.5**	4.5	-	1.1/1.3	075
	2.5	2.3	0.14	-	0	-	4	-10	140	FKM	**201LG2LVG2**	**-**	**WB5.0**	-	5	1.1/1.3	075
	3	0.5	0.03	-	0	8	8	-10	140	FKM	**201LG2NVG7**	**-**	**481865**	8	9	2.0	076
	3	0.5	0.03	-	0	10	11	-10	140	FKM	**201LG2NVG7**	**-**	**491514**	13	16	2.0	076
	3.5	0.6	0.04	-	0	6	6	-10	140	FKM	**201LG2PVG7**	**-**	**481865**	8	9	2.0	076
	3.5	0.6	0.04	-	0	7	8	-10	140	FKM	**201LG2PVG7**	**-**	**491514**	13	16	2.0	076

For this page	Port size	Orifice (mm)	Kv (l/min)	MOPD (bar)	Fluid Temp (°C)	Amb Temp (°C)
From	1/8''	1.5	0.5	4	-10	-10
To	1/4''	3.5	2.3	20	140	50

Drawing 074

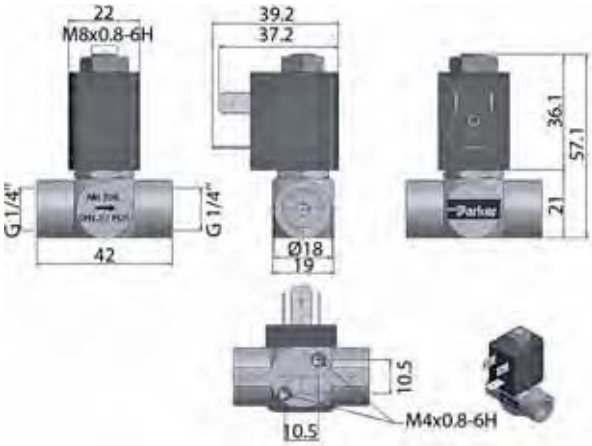

Drawing 075

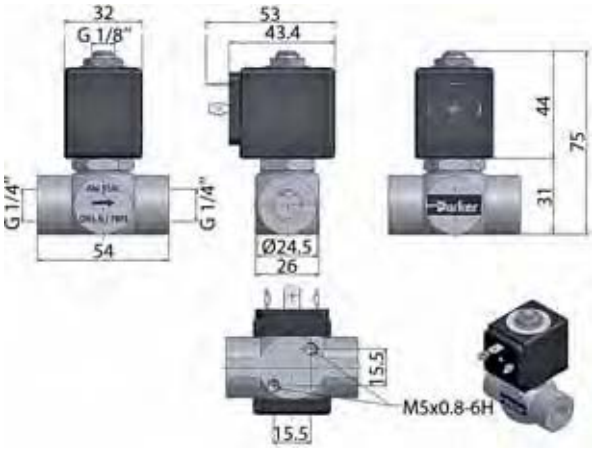

Drawing 076

2/2 HIGH CORROSION RESISTANT VALVES (316L STAINLESS STEEL)

DIRECT OPERATED

316L STAINLESS ST. PIPE MOUNTING

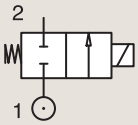

NORMALLY CLOSED

Port size	Orifice Ø	Flow factors			Operating Pressure Differential			Fluid Temp.		Seat Seal	Parker Valves			Power		Coil Group	Dwg. No.
					Min	Max(MOPD)		Min	Max								
BSP	mm	Kv l/min	KV m³/h	Qn l/min	bar	AC bar	DC bar	°C	°C		Valve Ref.	Housing Ref.	Coil Ref.	AC W	DC W		
3/8"	5	11	0.66	-	0	3	3	-10	140	FKM	**201LG3SVG7**	**-**	**481865**	8	9	2.0	077
	5	11	0.66	-	0	4	4	-10	140	FKM	**201LG3SVG7**	**-**	**491514**	13	16	2.0	077
	6.2	13	0.78	-	0	2	2	-10	140	FKM	**201LG3UVG7**	**-**	**481865**	8	9	2.0	077
	6.2	13	0.78	-	0	2	3	-10	140	FKM	**201LG3UVG7**	**-**	**491514**	13	16	2.0	077
1/2"	5	11	0.66	-	0	3	3	-10	140	FKM	**201LG4SVG7**	**-**	**481865**	8	9	2.0	078
	5	11	0.66	-	0	4	4	-10	140	FKM	**201LG4SVG7**	**-**	**491514**	13	16	2.0	078
	6.2	13	0.78	-	0	2	2	-10	140	FKM	**201LG4UVG7**	**-**	**481865**	8	9	2.0	078
	6.2	13	0.78	-	0	2	3	-10	140	FKM	**201LG4UVG7**	**-**	**491514**	13	16	2.0	078

For this page	Port size	Orifice (mm)	Kv (l/min)	MOPD (bar)	Fluid Temp (°C)	Amb Temp (°C)
From	3/8''	5	11	2	-10	-10
To	1/2''	6.2	13	4	140	50

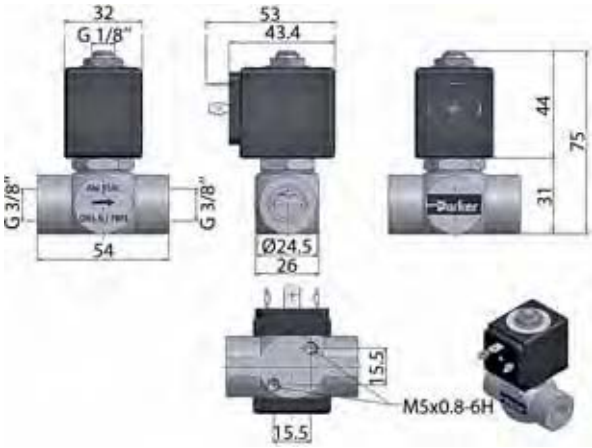

Drawing 077

Drawing 078

2/2 HIGH CORROSION RESISTANT VALVES (316L STAINLESS STEEL)

DIRECT OPERATED

316L STAINLESS ST. PIPE MOUNTING

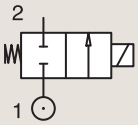

NORMALLY CLOSED

Port size	Orifice Ø	Flow factors			Operating Pressure Differential			Fluid Temp.		Seat Seal	Parker LUCIFER® Valves			IS	Power		Coil Group	Dwg. No.
					Min	Max(MOPD)		Min	Max		Valve Ref.	Housing Ref.	Coil Ref.					
	mm	Kv l/min	KV m³/h	Qn l/min	bar	AC bar	DC bar	°C	°C						AC W	DC W		
1/4" NPT	1	0.6	0.036	40	0	-	98	-40	75	PUR	**U121V5595** [1]	**-**	**492210**		-	1.8	9.0/10.1	6713
	1	0.6	0.036	40	0	-	98	-40	75	PUR	**U121V5595** [1]	**-**	**496565**	*	-	0.3	9.0/10.1	6713
	1	0.6	0.036	40	0	98	98	-40	75	PUR	**U121V5595** [1]	**-**	**496800**		8	8	9.0/10.1	6713
	1	0.6	0.036	40	0	98	98	-40	75	PUR	**U121V5595** [1]	**-**	**496895**		8	8	9.0/10.1	6713
	1	0.6	0.036	40	0	98	98	-40	75	PUR	**U121V5596** [1]	**-**	**492310**		6	6	10.1	6713
	1	0.6	0.036	40	0	98	98	-40	75	PUR	**U121V5596** [1]	**-**	**496560**		8	8	10.1	6713
	1	0.6	0.036	40	0	98	98	-40	75	PUR	**U121V5596** [1]	**-**	**496800**		8	8	10.1	6713
	1	-	-	40	0	98	98	-10	75	PUR	**U121V55961D** [1]	**-**	**483270**		8	8	11.0	6714
	1	-	-	40	0	98	98	-10	75	PUR	**U121V55961D** [1]	**-**	**483270.02**		8	8	11.0	6714

Notes:

1. Valve delivered with an individual material traceability certificate (3.1 following EN10204)

For this page	Port size	Orifice (mm)	Kv (l/min)	MOPD (bar)	Fluid Temp (°C)	Amb Temp (°C)
From	1/4''	1	-	98	-40	-40
To	1/4''	1	0.6	98	75	50

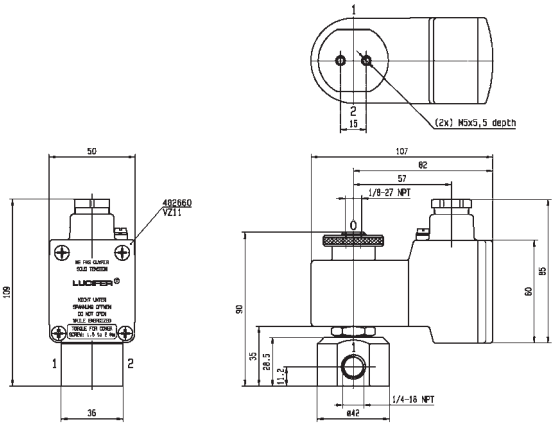

Drawing 6713

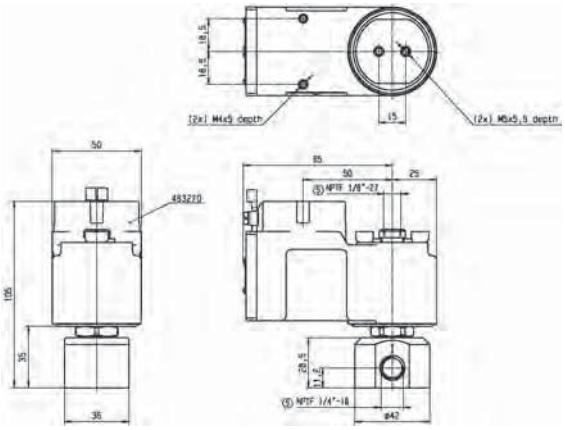

Drawing 6714

2/2 HIGH CORROSION RESISTANT VALVES (316L STAINLESS STEEL)

MAGNALIFT

Commercial Equipment

Medical / Instrumentation

Industrial Equipment

316L STAINLESS ST. PIPE MOUNTING

NORMALLY CLOSED

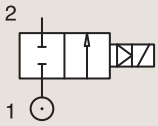

Port size	Orifice Ø	Flow factors			Operating Pressure Differential			Fluid Temp.		Seat Seal	Parker Valves			Power		Coil Group	Dwg. No.
					Min	Max(MOPD)		Min	Max								
BSP	mm	Kv l/min	KV m³/h	Qn l/min	bar	AC bar	DC bar	°C	°C		Valve Ref.	Housing Ref.	Coil Ref.	AC W	DC W		
3/8"	15	40	2.4	-	0	10	-	-10	85	EPDM	**221S10E**	**2995**	**481865**	8	-	2.0	067
	15	40	2.4	-	0	10	7	-10	140	EPDM	**221S10E** [1]	**4270**	**486265**	14	14	2.0	067
	15	40	2.4	-	0	10	-	-10	85	FKM	**221S10F**	**2995**	**481865**	8	-	2.0	067
	15	40	2.4	-	0	10	7	-10	85	FKM	**221S10F** [1]	**4270**	**486265**	14	14	2.0	067
1/2"	15	50	3	-	0	10	-	-10	85	EPDM	**221S15E**	**2995**	**481865**	8	-	2.0	068
	15	50	3	-	0	10	7	-10	140	EPDM	**221S15E** [1]	**4270**	**486265**	14	14	2.0	068
	15	50	3	-	0	10	-	-10	85	FKM	**221S15F**	**2995**	**481865**	8	-	2.0	068
	15	50	3	-	0	10	7	-10	85	FKM	**221S15F** [1]	**4270**	**486265**	14	14	2.0	068
3/4"	24	95	5.7	-	0	10	-	-10	85	EPDM	**221S20E**	**2995**	**481865**	8	-	2.0	069
	24	95	5.7	-	0	10	7	-10	140	EPDM	**221S20E** [1]	**4270**	**486265**	14	14	2.0	069
	24	95	5.7	-	0	10	-	-10	85	FKM	**221S20F**	**2995**	**481865**	8	-	2.0	069
	24	95	5.7	-	0	10	7	-10	85	FKM	**221S20F** [1]	**4270**	**486265**	14	14	2.0	069

Notes:

1. Maximum pressure for steam: 4 Bar (140°C)

For this page	Port size	Orifice (mm)	Kv (l/min)	MOPD (bar)	Fluid Temp (°C)	Amb Temp (°C)
From	3/8"	15	40	7	-10	-10
To	3/4"	24	95	10	140	50

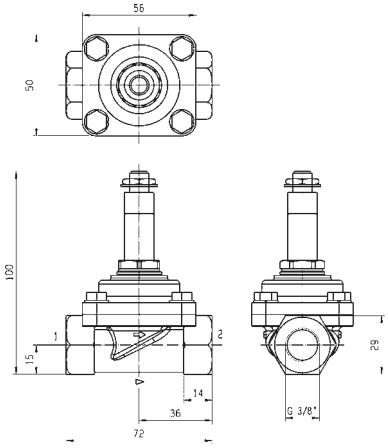

Drawing 067

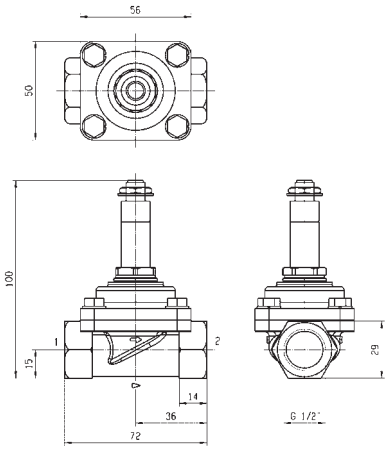

Drawing 068

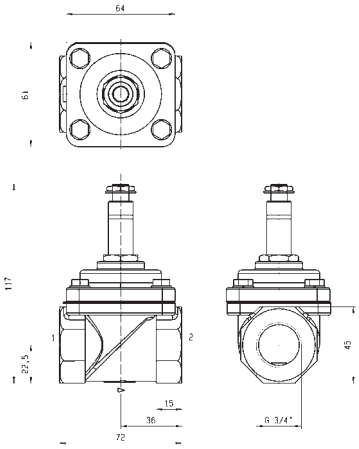

Drawing 069

2/2 HIGH CORROSION RESISTANT VALVES (316L STAINLESS STEEL)

MAGNALIFT

316L STAINLESS ST. PIPE MOUNTING

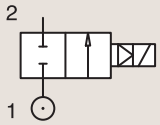

NORMALLY CLOSED

Port size	Orifice Ø	Flow factors			Operating Pressure Differential			Fluid Temp.		Seat Seal	Parker Valves			Power		Coil Group	Dwg. No.
					Min	Max(MOPD)		Min	Max		Valve Ref.	Housing Ref.	Coil Ref.				
BSP	mm	Kv l/min	KV m³/h	Qn l/min	bar	AC bar	DC bar	°C	°C					AC W	DC W		
1"	24	105	6.3	-	0	10	-	-10	85	EPDM	**221S25E**	**2995**	**481865**	8	-	2.0	070
	24	105	6.3	-	0	10	7	-10	140	EPDM	**221S25E** [1]	**4270**	**486265**	14	14	2.0	070
	24	105	6.3	-	0	10	-	-10	85	FKM	**221S25F**	**2995**	**481865**	8	-	2.0	070
	24	105	6.3	-	0	10	7	-10	85	FKM	**221S25F** [1]	**4270**	**486265**	14	14	2.0	070

Notes:

1. Maximum pressure for steam: 4 Bar (140°C)

For this page	Port size	Orifice (mm)	Kv (l/min)	MOPD (bar)	Fluid Temp (°C)	Amb Temp (°C)
From	1''	24	105	7	-10	-10
To	1''	24	105	10	140	50

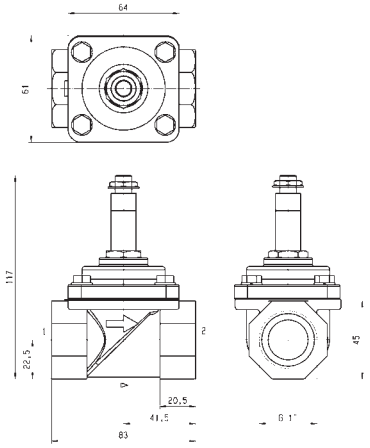

Drawing 070

OIL BURNER VALVES

Oil Burner

2/2

Actuation	Body	Function	Port Size	Orifice (mm)	Flow Factor Kv(l/min)	MOPD (bar)	Max Fluid Temp. (°C)	Page Parker Valves	Page Parker LUCIFER® Valves
Direct Operated	Brass/Pipe mounting	Normally Closed	1/8"	1.7 to 4	5.3	30	160	178	184
			1/4"	2.5 to 4	6.5	30	160	180	184
			3/8"	5 to 11	22	30	160	182	184
			1/2"	5 to 14	25	30	160	182	184
	Brass/Pipe mounting	Normally Open	1/8"	2.5 to 3	4	30	160	186	188
			1/4"	2.5 to 3	4	30	160	186	188
	Brass/Sub-base mounting	Normally Closed	14 mm	14	25	30	160	-	188
Magnalift	Brass/Pipe mounting	Normally Closed	1/2"	15	50	5	140	-	190
Pilot Operated	Brass/Pipe mounting	Normally Closed	1/4"	8	36	40	140	-	192
			3/8"	11	50	40	160	-	192
			1/2"	15	60	40	160	-	194
Pilot Operated	Brass/Sub-base mounting	Normally Closed	14 mm	14	45	30	160	-	194

2/2 OIL BURNER VALVES

DIRECT OPERATED

Heating Systems

Commercial Equipment

BRASS
PIPE MOUNTING
NORMALLY CLOSED

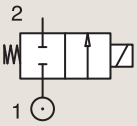

Port size	Orifice Ø	Flow factors			Operating Pressure Differential Max(MOPD)			Fluid Temp.		Seat Seal	Parker Valves			Power		Coil Group	Dwg. No.
					Min			Min	Max		Valve Order Number	Valve Type	Coil Type				
BSP	mm	Kv l/min	KV m³/h	Qn m³/h	bar	AC bar	DC bar	°C	°C					AC W	DC W		
1/8"	1.7	1.4	0.086	-	0	25	-	-10	90	NBR	390034 [2]	131IN	KT09 110-120/60	9	-	22.0	015
	1.7	1.4	0.086	-	0	25	-	-10	90	NBR	390085 [2]	131IN	KT09 208-230/60	9	-	22.0	015
	1.7	1.4	0.086	-	0	25	-	-10	90	NBR	390005 [2]	131IN	KT09 24/50	9	-	22.0	015
	1.7	1.4	0.086	-	0	-	22	-10	90	NBR	390120 [2]	131IN	KT10 24 DC	-	10	22.0	015
	1.7	1.4	0.086	-	0	25	-	-10	90	NBR	390300 [12]	131INDIN	XT09 230/50	9	-	22.0	015
	1.7	1.4	0.086	-	0	25	-	-10	90	FKM	390086 [2]	131IV	KT09 208-230/60	9	-	22.0	015
	1.7	1.4	0.086	-	0	25	-	-10	90	FKM	390088 [12]	131IV	KT09 230/50	9	-	22.0	015
	1.7	1.4	0.086	-	0	25	-	-10	90	FKM	390089 [2]	131IV	KT09 240/50	9	-	22.0	015
	2.2	2	0.12	-	0	15	-	-10	90	NBR	390216 [2]	131AN	KT09 208-230/60	9	-	22.0	015
	2.2	2	0.12	-	0	15	-	-10	90	NBR	390165 [2]	131AN	KT09 230/50	9	-	22.0	015
	2.2	2	0.12	-	0	15	-	-10	90	NBR	390145 [2]	131AN	KT09 24/50	9	-	22.0	015
	2.2	2	0.12	-	0	15	-	-10	90	NBR	390150 [2]	131AN	KT09 42/50	9	-	22.0	015
	2.2	2	0.12	-	0	-	13	-10	90	NBR	390195 [2]	131AN	KT10 12 DC	-	10	22.0	015
	2.2	2	0.12	-	0	-	13	-10	90	NBR	390215 [2]	131AN	KT10 24 DC	-	10	22.0	015
	2.5	3.2	0.192	-	0	30	-	-30	140	Ruby	362496J	PM140IR	ZB09	9	-	20.1/20.2	027
	2.5	3.2	0.192	-	0	-	17	-30	140	Ruby	362496J	PM140IR	ZB12	-	12	20.1/20.2	027
	2.8	2.9	0.174	-	0	8	-	-10	140	FKM	390445 [2]	131.4BV	KT09 115/50	9	-	22.0	012
	2.8	2.9	0.174	-	0	8	-	-10	140	FKM	390457 [2]	131.4BV	KT09 115/60	9	-	22.0	012
	2.8	2.9	0.174	-	0	8	-	-10	140	FKM	390458 [2]	131.4BV	KT09 208-230/60	9	-	22.0	012
	2.8	2.9	0.174	-	0	8	-	-10	140	FKM	390465 [2]	131.4BV	KT09 230/50	9	-	22.0	012
	2.8	2.9	0.174	-	0	8	-	-10	140	FKM	390405 [2]	131.4BV	KT09 24/50	9	-	22.0	012
	2.8	2.9	0.174	-	0	-	6	-10	140	FKM	390495 [2]	131.4BV	KT10 12 DC	-	10	22.0	012
	2.8	2.9	0.174	-	0	-	6	-10	140	FKM	390505 [2]	131.4BV	KT10 24 DC	-	10	22.0	012

Notes:

1. DIN-EN-ISO 23553-1 (2009-10) approved for oil burners
2. Ordering number is for an assembled valve and coil, with the voltage shown.

For this page	Port size	Orifice (mm)	Kv (l/min)	MOPD (bar)	Fluid Temp (°C)	Amb Temp (°C)
From	1/8''	1.7	1.4	6	-30	-10
To	1/8''	2.8	3.2	30	140	50

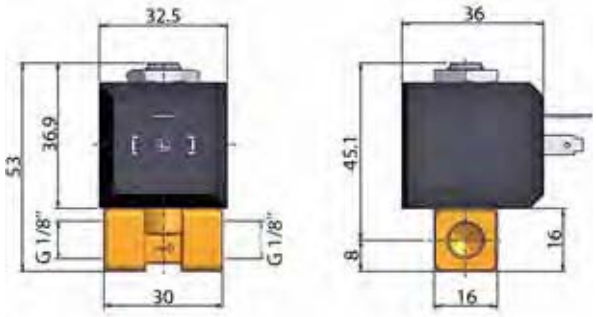

Drawing 015

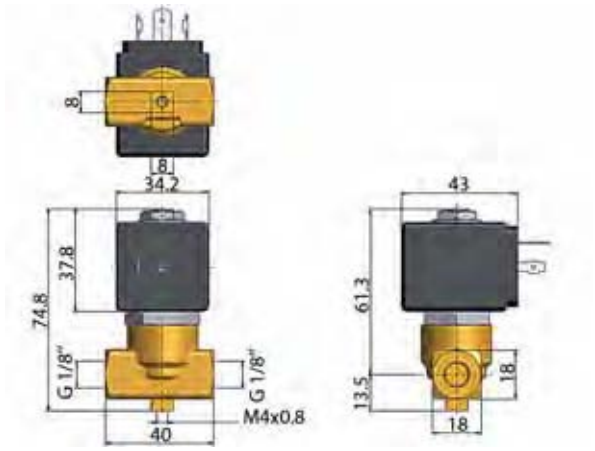

Drawing 027

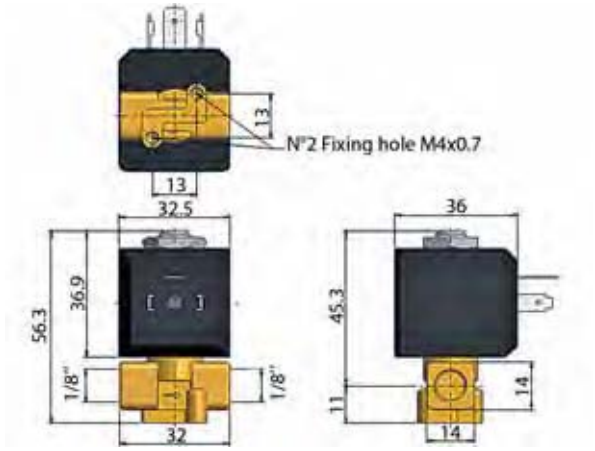

Drawing 012

2/2 OIL BURNER VALVES

DIRECT OPERATED

BRASS PIPE MOUNTING

NORMALLY CLOSED

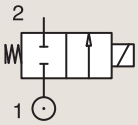

Port size	Orifice Ø	Flow factors			Operating Pressure Differential			Fluid Temp.		Seat Seal	Parker Valves			Power		Coil Group	Dwg. No.
					Min	Max(MOPD)		Min	Max		Valve Order Number	Valve Type	Coil Type				
BSP	mm	Kv l/min	KV m³/h	Qn m³/h	bar	AC bar	DC bar	°C	°C					AC W	DC W		
1/8"	3	4	0.24	-	0	30	-	-30	140	Ruby	362510J [1]	PM140.4AR	ZH14	14	-	20.2	025
	4	5.3	0.318	-	0	2	-	-10	90	NBR	390874 [2]	131.4CG	KT09 115/50	9	-	22.0	013
	4	5.3	0.318	-	0	2	-	-10	90	NBR	390813 [2]	131.4CG	KT09 115/60	9	-	22.0	013
	4	5.3	0.318	-	0	2	-	-10	90	NBR	390878 [2]	131.4CG	KT09 230/50	9	-	22.0	013
	4	5.3	0.318	-	0	2	-	-10	90	NBR	390805 [2]	131.4CG	KT09 24/50	9	-	22.0	013
	4	5.3	0.318	-	0	2	-	-10	90	NBR	390875 [2]	131.4CG	KT09 240/50	9	-	22.0	013
	4	5.3	0.318	-	0	-	1	-10	90	NBR	390803 [2]	131.4CG	KT10 12DC	-	10	22.0	013
	4	5.3	0.318	-	0	-	1	-10	90	NBR	390802 [2]	131.4CG	KT10 24 DC	-	10	22.0	013
1/4"	2.5	3.2	0.192	-	0	30	-	-30	140	Ruby	362518J [1]	PM140CR	ZB09	9	-	20.1/20.2	026
	2.5	3.2	0.192	-	0	-	17	-30	140	Ruby	362518J [1]	PM140CR	ZB12	-	12	20.1/20.2	026
	2.5	3.2	0.192	-	0	30	-	-30	140	Ruby	362518J [1]	PM140CR	ZH14	14	-	20.1/20.2	026
	2.5	3.2	0.192	-	0	-	17	-30	140	Ruby	362518J [1]	PM140CR	ZH16	-	16	20.1/20.2	026
	2.8	2.9	0.174	-	0	8	-	-10	140	FKM	390560 [2]	131.4FV	KT09 115/50	9	-	22.0	014
	2.8	2.9	0.174	-	0	8	-	-10	140	FKM	390560 [2]	131.4FV	KT09 115/60	9	-	22.0	014
	2.8	2.9	0.174	-	0	8	-	-10	140	FKM	390626 [2]	131.4FV	KT09 208-230/60	9	-	22.0	014
	2.8	2.9	0.174	-	0	8	-	-10	140	FKM	390580 [2]	131.4FV	KT09 230/50	9	-	22.0	014
	2.8	2.9	0.174	-	0	8	-	-10	140	FKM	390525 [2]	131.4FV	KT09 24/50	9	-	22.0	014
	2.8	2.9	0.174	-	0	-	6	-10	140	FKM	390605 [2]	131.4FV	KT10 12 DC	-	10	22.0	014
	2.8	2.9	0.174	-	0	-	6	-10	140	FKM	390625 [2]	131.4FV	KT10 24 DC	-	10	22.0	014
	3	4	0.24	-	0	30	-	-30	140	Ruby	362530J [1]	PM140.4DR	ZH14	14	-	20.0/20.1/20.2	026
	3	4	0.24	-	0	30	-	-30	140	Ruby	362524J	PM140DR	ZB09	9	-	20.1/20.2	026
	3	4	0.24	-	0	-	12	-30	140	Ruby	362524J	PM140DR	ZB12	-	12	20.1/20.2	026
	3	4	0.24	-	0	30	-	-30	140	Ruby	362524J	PM140DR	ZH14	14	-	20.1/20.2	026
	3	4	0.24	-	0	-	12	-30	140	Ruby	362524J	PM140DR	ZH16	-	16	20.1/20.2	026
	4	5.3	0.318	-	0	1	-	-10	90	NBR	390915 [2]	131.4GG	KT09 115/50	9	-	22.0	013
	4	5.3	0.318	-	0	1	-	-10	90	NBR	390945 [2]	131.4GG	KT09 230/50	9	-	22.0	013
	4	5.3	0.318	-	0	1	-	-10	90	NBR	390895 [2]	131.4GG	KT09 24/50	9	-	22.0	013
	4	5.3	0.318	-	0	1	-	-10	90	NBR	390975 [2]	131.4GG	KT09 240/50	9	-	22.0	013
	4	5.3	0.318	-	0	-	1	-10	90	NBR	390995 [2]	131.4GG	KT10 12 DC	-	10	22.0	013
	4	5.3	0.318	-	0	-	1	-10	90	NBR	390997 [2]	131.4GG	KT10 24 DC	-	10	22.0	013
	4	5.3	0.318	-	0	2	-	-10	140	FKM	390668 [2]	131.4GV	KT09 115/50	9	-	22.0	014
	4	5.3	0.318	-	0	2	-	-10	140	FKM	390700 [2]	131.4GV	KT09 115/60	9	-	22.0	014
	4	5.3	0.318	-	1	2	-	-10	140	FKM	390725 [2]	131.4GV	KT09 208-230/60	9	-	22.0	014

Notes:

1. DIN-EN-ISO 23553-1 (2009-10) approved for oil burners
2. Ordering number is for an assembled valve and coil, with the voltage shown.

For this page	Port size	Orifice (mm)	Kv (l/min)	MOPD (bar)	Fluid Temp (°C)	Amb Temp (°C)
From	1/8''	2.5	2.9	1	-30	-10
To	1/4''	4	5.3	30	140	50

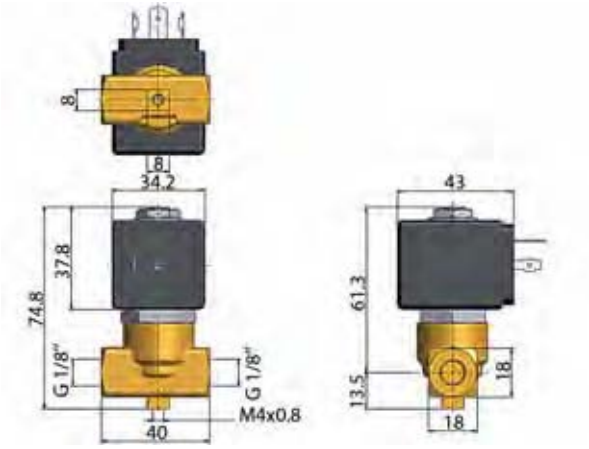

Drawing 025

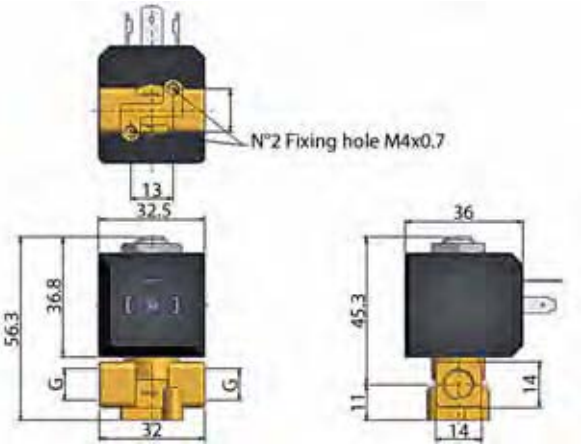

Drawing 013

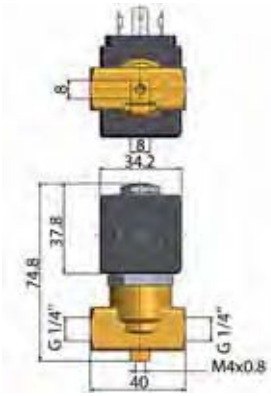

Drawing 026

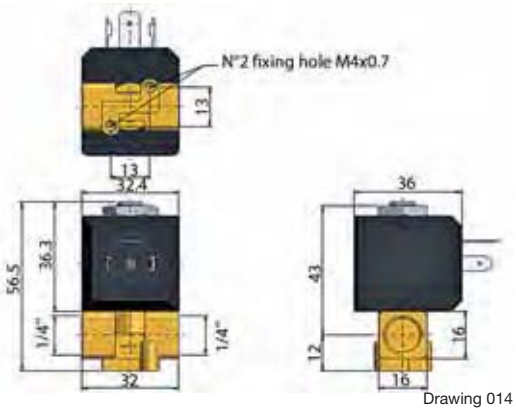

Drawing 014

2/2 OIL BURNER VALVES

DIRECT OPERATED

BRASS

PIPE MOUNTING

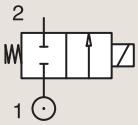

NORMALLY CLOSED

Port size	Orifice Ø	Flow factors			Operating Pressure Differential			Fluid Temp.		Seat Seal	Parker Valves			Power		Coil Group	Dwg. No.
					Min	Max(MOPD)		Min	Max		Valve Order Number	Valve Type	Coil Type				
BSP	mm	Kv l/min	KV m³/h	Qn m³/h	bar	AC bar	DC bar	°C	°C					AC W	DC W		
1/4"	4	5.3	0.318	-	0	2	-	-10	140	FKM	**390705** [1]	**131.4GV**	**KT09** 230/50	9	-	22.0	014
	4	5.3	0.318	-	0	2	-	-10	140	FKM	**390650** [1]	**131.4GV**	**KT09** 24/50	9	-	22.0	014
	4	5.3	0.318	-	0	2	-	-10	140	FKM	**390718** [1]	**131.4GV**	**KT09** 240/50	9	-	22.0	014
	4	5.3	0.318	-	0	-	1	-10	140	FKM	**390720** [1]	**131.4GV**	**KT10** 12 DC	-	10	22.0	014
	4	5.3	0.318	-	0	-	1	-10	140	FKM	**390721** [1]	**131.4GV**	**KT10** 24 DC	-	10	22.0	014
3/8"	5	10	0.612	-	0	5	-	-10	140	FKM	**364010**	**PM153BV**	**ZB14**	14	-	20.2/22.0	037
	5	10	0.612	-	0	-	1.5	-10	140	FKM	**364010**	**PM153BV**	**ZB16**	-	16	20.2/22.0	037
1/2"	5	10	0.612	-	0	5	-	-10	140	FKM	**364035**	**PM153GV**	**ZB14**	14	-	20.2/22.0	037
	5	10	0.612	-	0	-	1.5	-10	140	FKM	**364035**	**PM153GV**	**ZB16**	-	16	20.2/22.0	037

Notes:

1. Ordering number is for an assembled valve and coil, with the voltage shown.

For this page	Port size	Orifice (mm)	Kv (l/min)	MOPD (bar)	Fluid Temp (°C)	Amb Temp (°C)
From	1/4''	4	5.3	1	-10	-10
To	1/2''	5	10	5	140	50

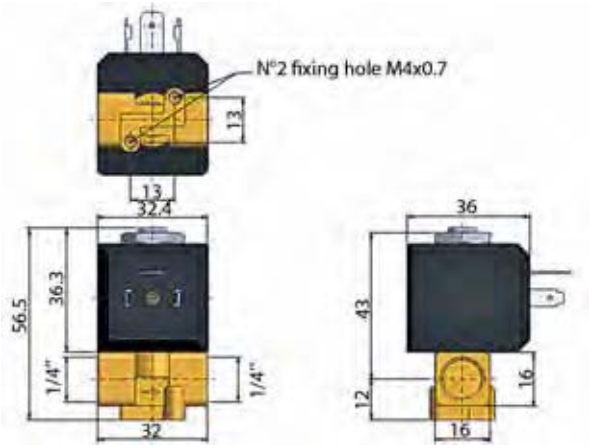

Drawing 014

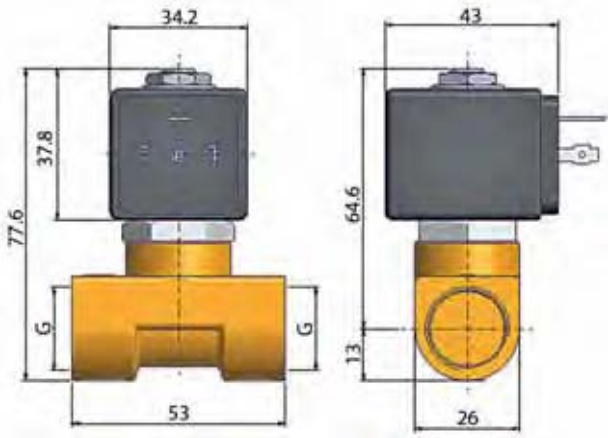

Drawing 037

2/2 OIL BURNER VALVES

DIRECT OPERATED

BRASS
PIPE MOUNTING
NORMALLY CLOSED

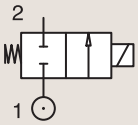

Port size	Orifice Ø	Flow factors			Operating Pressure Differential			Fluid Temp.		Seat Seal	Parker LUCIFER® Valves			Power		Coil Group	Dwg. No.
					Min	Max(MOPD)		Min	Max								
BSP	mm	Kv l/min	KV m³/h	Qn l/min	bar	AC bar	DC bar	°C	°C		Valve Ref.	Housing Ref.	Coil Ref.	AC W	DC W		
1/8"	3	4	0.24	-	0	30	-	-30	160	Ruby	121K2423 13	8520.23	483824	19	-	14.1	3292
1/4"	3	4.5	0.27	-	0	30	-	-30	160	Ruby	121K6423 13	8520.23	483824	19	-	14.1	3292
	4	6.5	0.39	-	0	30	-	0	160	Ruby	121K6220 13	8520.23	483541	20	-	14.3	3510
3/8"	6	12	0.72	0	0	5	-	0	120	Ruby	121K3321	2995	492425	14	-	14.1	3551
	11	22	1.32	-	0	30	-	0	160	FKM	121G2320 123	8520.23	483541	20	-	14.3	3646
1/2"	14	25	1.5	-	0	30	-	0	160	FKM	121G2520 123	8520.23	483541	20	-	14.3	3646
	14	25	1.5	-	0	30	-	0	160	FKM	121G2523 123	8520.23	483824	19	-	14.1	3646

Notes:

1. DIN-EN-ISO 23553-1 (2009-10) approved for oil burners
2. Max. Static pressure = 30 bar; max pressure differential = 0.2 bar
3. Valve only compatible with hydraulic oil and neutral liquids

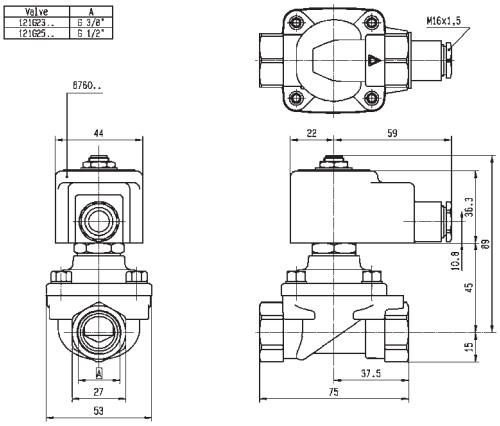

Drawing 3646

For this page	Port size	Orifice (mm)	Kv (l/min)	MOPD (bar)	Fluid Temp (°C)	Amb Temp (°C)
From	1/8"	3	4	5	-30	0
To	1/2"	14	25	30	160	60

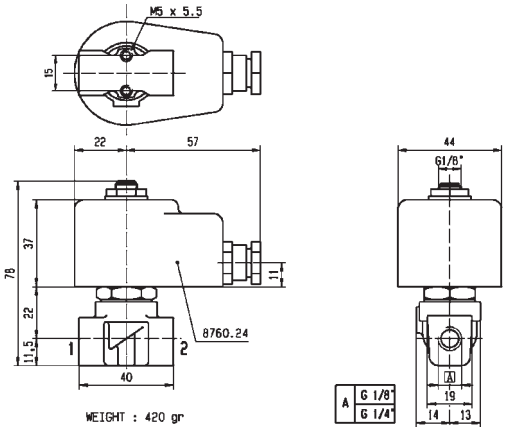

Drawing 3292

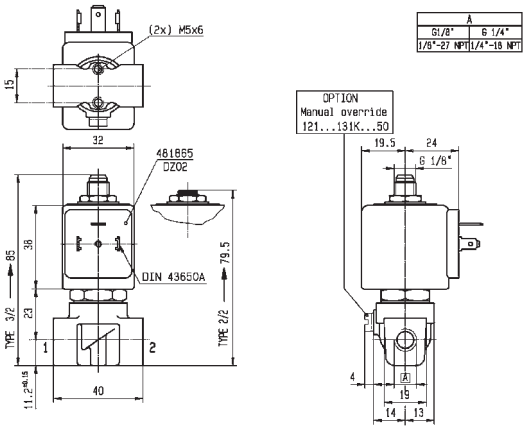

Drawing 3510

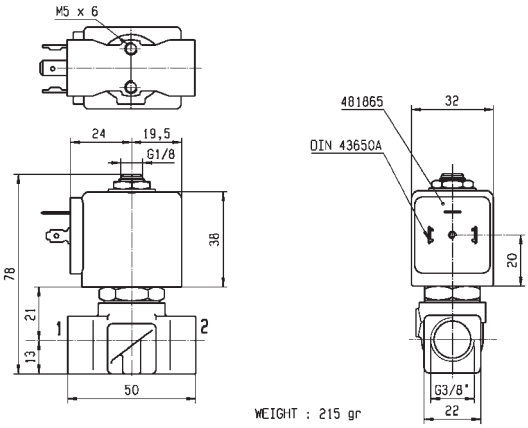

Drawing 3551

2/2 OIL BURNER VALVES

DIRECT OPERATED

BRASS

PIPE MOUNTING

NORMALLY OPEN

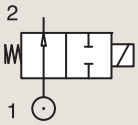

Port size	Orifice Ø	Flow factors			Operating Pressure Differential			Fluid Temp.		Seat Seal	Parker Valves			Power		Coil Group	Dwg. No.
					Min	Max(MOPD)		Min	Max		Valve Order Number	Valve Type	Coil Type				
BSP	mm	Kv l/min	KV m³/h	Qn m³/h	bar	AC bar	DC bar	°C	°C					AC W	DC W		
1/8"	3	4	0.24	-	0	30	-	-30	160	Ruby	**360451J**	**PM120.4IR**	**ZB14**	14	-	20.2	001
	3	4	0.24	-	0	30	-	-30	160	Ruby	**360451J$_1$**	**PM120.4IR**	**ZH14**	14	-	20.2	001
1/4"	3	4	0.24	-	0	30	-	-30	160	Ruby	**360452J**	**PM120.4AR**	**ZB14**	14	-	20.2	001
	3	4	0.24	-	0	30	-	-30	160	Ruby	**360452J$_1$**	**PM120.4AR**	**ZH14**	14	-	20.2	001

Notes:

1. DIN-EN-ISO 23553-1 (2009-10) approved for oil burners

For this page	Port size	Orifice (mm)	Kv (l/min)	MOPD (bar)	Fluid Temp (°C)	Amb Temp (°C)
From	1/8"	3	4	30	-30	-10
To	1/4"	3	4	30	160	50

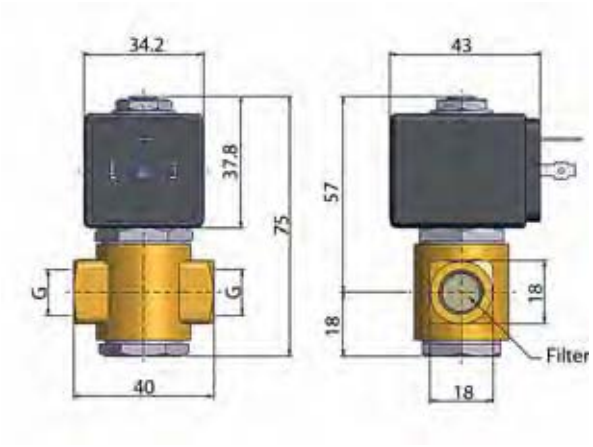

Drawing 001

2/2 OIL BURNER VALVES

DIRECT OPERATED

BRASS PIPE MOUNTING

NORMALLY OPEN

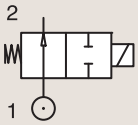

Port size	Orifice Ø	Flow factors			Operating Pressure Differential			Fluid Temp.		Seat Seal	Parker LUCIFER® Valves			Power		Coil Group	Dwg. No.
					Min	Max(MOPD)		Min	Max								
BSP	mm	Kv l/min	KV m³/h	Qn l/min	bar	AC bar	DC bar	°C	°C		Valve Ref.	Housing Ref.	Coil Ref.	AC W	DC W		
1/8"	2.5	3.5	0.21	-	0	30	-	-30	160	Ruby	122K9321 [1]	8520.23	483824	19	-	14.1	6766
1/4"	2.5	3.5	0.21	-	0	30	-	-30	160	Ruby	122K8321 [1]	8520.23	483824	19	-	14.1	6766

Notes:

1. DIN-EN-ISO 23553-1 (2009-10) approved for oil burners

BRASS SUB-BASE MOUNTING

NORMALLY CLOSED

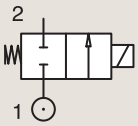

Port size	Orifice Ø	Flow factors			Operating Pressure Differential			Fluid Temp.		Seat Seal	Parker LUCIFER® Valves			Power		Coil Group	Dwg. No.
					Min	Max(MOPD)		Min	Max								
	mm	Kv l/min	KV m³/h	Qn l/min	bar	AC bar	DC bar	°C	°C		Valve Ref.	Housing Ref.	Coil Ref.	AC W	DC W		
SB	14	25	1.5	-	0	30	-	0	160	FKM	121F2523 [1]	8520.23	483824	19	-	14.1	7638

Notes:

1. DIN-EN-ISO 23553-1 (2009-10) approved for oil burners

For this page	Port size	Orifice (mm)	Kv (l/min)	MOPD (bar)	Fluid Temp (°C)	Amb Temp (°C)
From	1/8"	2.5	3.5	30	-30	0
To	14 mm	14	25	30	160	60

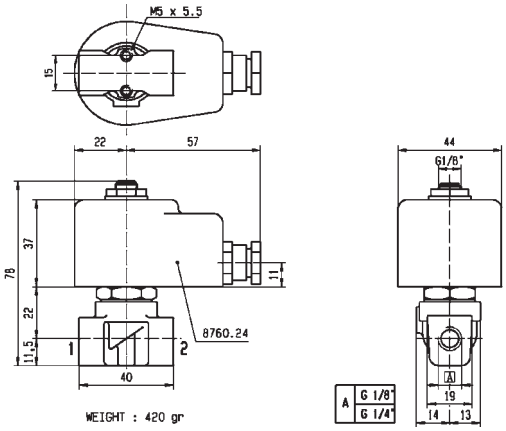

Drawing 6766

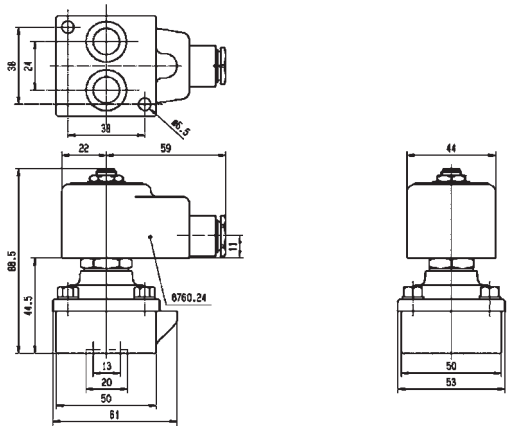

Drawing 7638

2/2 OIL BURNER VALVES

MAGNALIFT

BRASS
PIPE MOUNTING
NORMALLY CLOSED

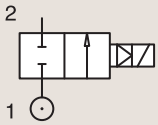

Port size	Orifice Ø	Flow factors			Operating Pressure Differential			Fluid Temp.		Seat Seal	Parker LUCIFER® Valves			Power		Coil Group	Dwg. No.
					Min	Max(MOPD)		Min	Max		Valve Ref.	Housing Ref.	Coil Ref.				
BSP	mm	Kv l/min	KV m^3/h	Qn l/min	bar	AC bar	DC bar	°C	°C					AC W	DC W		
1/2"	15	50	3	0	0	5	-	0	140	FKM	**221G2523** [1]	**8520.25**	**483824**	19	-	14.1	8298

Notes:

1. DIN-EN-ISO 23553-1 (2009-10) approved for oil burners

For this page	Port size	Orifice (mm)	Kv (l/min)	MOPD (bar)	Fluid Temp (°C)	Amb Temp (°C)
From	1/2"	15	50	5	0	0
To	1/2"	15	50	5	140	60

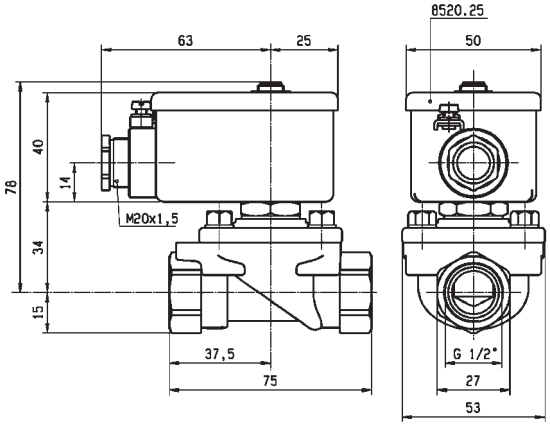

Drawing 8298

2/2 OIL BURNER VALVES

PILOT OPERATED

Commercial Equipment

Industrial Equipment

Heating Systems

BRASS
PIPE MOUNTING
NORMALLY CLOSED

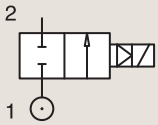

Port size	Orifice Ø	Flow factors			Operating Pressure Differential			Fluid Temp.		Seat Seal	Parker LUCIFER® Valves			Power		Coil Group	Dwg. No.
					Min	Max(MOPD)		Min	Max		Valve Ref.	Housing Ref.	Coil Ref.				
BSP	mm	Kv l/min	KV m³/h	Qn l/min	bar	AC bar	DC bar	°C	°C					AC W	DC W		
1/4"	8	36	2.16	-	0.3	40	25	-10	100	FKM	E321H21 234	2995	481865	8	9	2.0	3523
	8	36	2.16	-	0.3	40	30	-10	120	FKM	E321H21 234	4270	481000	8	8	2.0	3523
	8	36	2.16	-	0.3	40	40	-10	140	FKM	E321H21 234	4270	486265	14	14	2.0	3523
3/8"	11	40	2.4	-	0.3	30	-	0	160	Ruby	321H2322 124	8520.23	483541	20	-	14.3	3633
	11	50	3	-	0.3	40	25	-10	100	FKM	E321H23 234	2995	481865	8	9	2.0	3521
	11	50	3	-	0.3	40	30	-10	120	FKM	E321H23 234	4270	481000	8	8	2.0	3521
	11	50	3	-	0.3	40	40	-10	140	FKM	E321H23 234	4270	486265	14	14	2.0	3521

Notes:

1. DIN-EN-ISO 23553-1 (2009-10) approved for oil burners
2. Minimum pressure differential = 0.3 bar for opening and 0 bar for closing
3. Pilot seat disc in synthetic Ruby
4. Valve only compatible with hydraulic oil and neutral liquids

For this page	Port size	Orifice (mm)	Kv (l/min)	MOPD (bar)	Fluid Temp (°C)	Amb Temp (°C)
From	1/4"	8	36	25	-10	-10
To	3/8"	11	50	40	160	50

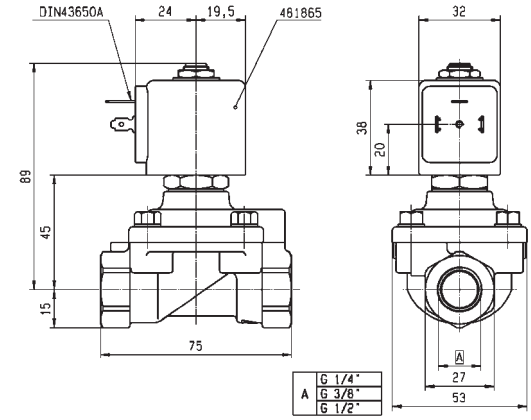

Drawing 3523

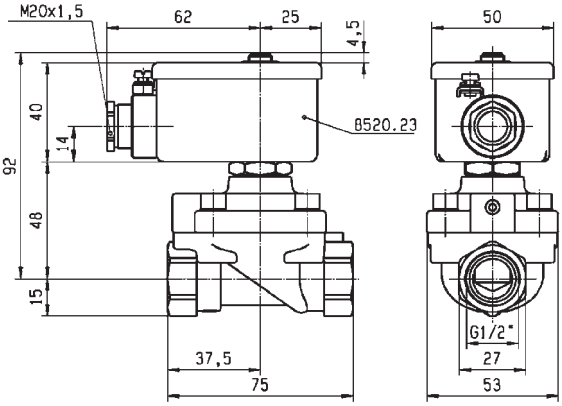

Drawing 3633

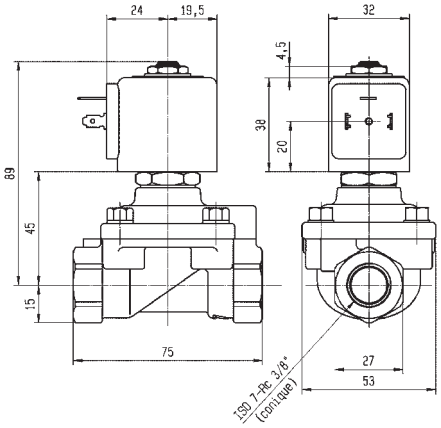

Drawing 3521

2/2 OIL BURNER VALVES

PILOT OPERATED

BRASS PIPE MOUNTING

NORMALLY CLOSED

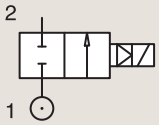

Port size	Orifice Ø	Flow factors			Operating Pressure Differential			Fluid Temp.		Seat Seal	Parker LUCIFER® Valves			Power		Coil Group	Dwg. No.
					Min	Max(MOPD)		Min	Max								
BSP	mm	Kv l/min	KV m³/h	Qn l/min	bar	AC bar	DC bar	°C	°C		Valve Ref.	Housing Ref.	Coil Ref.	AC W	DC W		
1/2"	15	60	3.6	-	0.3	30	-	0	160	Ruby	**321H2522** 14	**8520.23**	**483541**	20	-	14.3	3633
	15	60	3.6	-	0.3	30	-	0	160	Ruby	**321H2523** 14	**8520.23**	**483824**	19	-	14.1	3633
	15	60	3.6	-	0.3	40	25	-10	100	FKM	**E321H25** 234	**2995**	**481865**	8	9	2.0/14.2	3522
	15	60	3.6	-	0.3	40	30	-10	120	FKM	**E321H25** 234	**-**	**483371**	8	8	2.0/14.2	3522
	15	60	3.6	-	0.3	40	40	-10	140	FKM	**E321H25** 234	**4270**	**486265**	14	14	2.0/14.2	3522

Notes:

1. DIN-EN-ISO 23553-1 (2009-10) approved for oil burners
2. Minimum pressure differential = 0.3 bar for opening and 0 bar for closing
3. Pilot seat disc in synthetic Ruby
4. Valve only compatible with hydraulic oil and neutral liquids

BRASS SUB-BASE MOUNTING

NORMALLY CLOSED

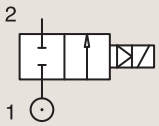

Port size	Orifice Ø	Flow factors			Operating Pressure Differential			Fluid Temp.		Seat Seal	Parker LUCIFER® Valves			Power		Coil Group	Dwg. No.
					Min	Max(MOPD)		Min	Max								
	mm	Kv l/min	KV m³/h	Qn l/min	bar	AC bar	DC bar	°C	°C		Valve Ref.	Housing Ref.	Coil Ref.	AC W	DC W		
SB	14	45	2.7	-	0	30	-	0	160	FKM	**321F2523** 12	**8520.23**	**483824**	19	-	14.1	7639

Notes:

1. DIN-EN-ISO 23553-1 (2009-10) approved for oil burners
2. Minimum pressure differential = 0.3 bar for opening and 0 bar for closing

For this page	Port size	Orifice (mm)	Kv (l/min)	MOPD (bar)	Fluid Temp (°C)	Amb Temp (°C)
From	1/2"	14	45	25	-10	-10
To	14 mm	15	60	40	160	50

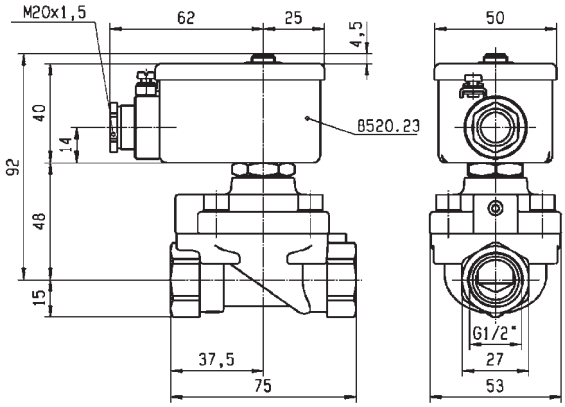

Drawing 3633

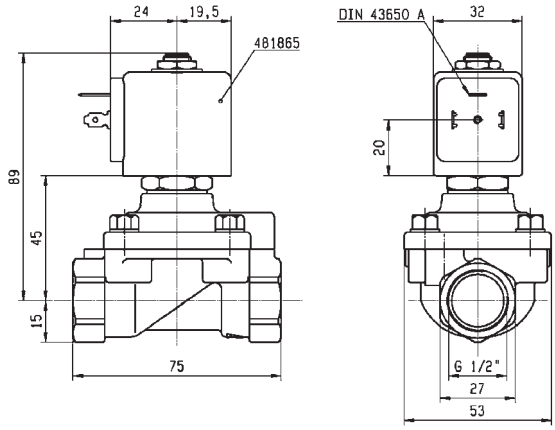

Drawing 3522

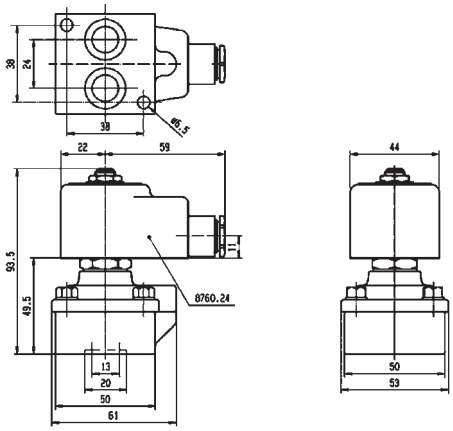

Drawing 7639

FAST SWITCHING VALVES

2/2

Actuation	Body	Function	Port Size	Orifice (mm)	Flow Factor Kv(l/min)	MOPD (bar)	Max Fluid Temp. (°C)	Page Parker Valves	Page Parker LUCIFER® Valves
Magnalift	Brass/Pipe mounting	Normally Closed	3/8''	8	0	7	40	-	198

2/2 FAST SWITCHING VALVES

MAGNALIFT

Industrial Equipment

BRASS PIPE MOUNTING

NORMALLY CLOSED

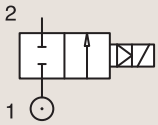

Port size	Orifice Ø	Flow factors			Operating Pressure Differential			Fluid Temp.		Seat Seal	Parker LUCIFER® Valves			Power		Coil Group	Dwg. No.
					Min	Max(MOPD)		Min	Max								
BSP	mm	Kv l/min	KV m³/h	Qn l/min	bar	AC bar	DC bar	°C	°C		Valve Ref.	Housing Ref.	Coil Ref.	AC W	DC W		
3/8"	8	-	-	-	0	-	7	0	40	PUR	221J3301E [1]	2995.6	483816	-	14		8020

Notes:

1. For more details, please consult catalogue 8674UK

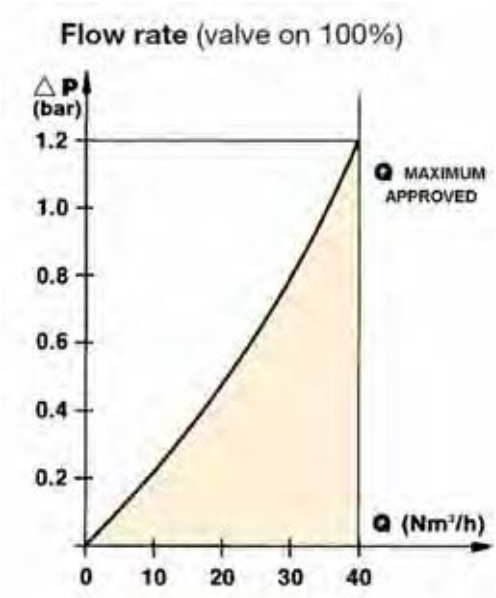

For this page	Port size	Orifice (mm)	Kv (l/min)	MOPD (bar)	Fluid Temp (°C)	Amb Temp (°C)
From	3/8"	8	-	7	0	0
To	3/8"	8	-	7	40	50

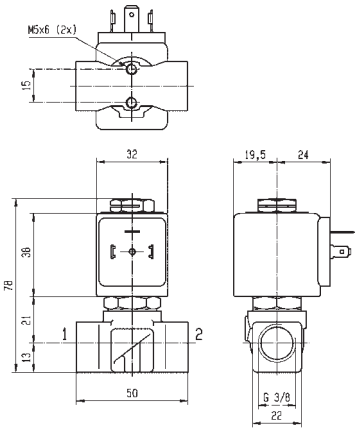

Drawing 8020

VALVES FOR BEVERAGE DISPENSING - LIQUIPURE®

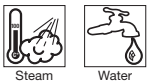

2/2

Actuation	Body	Function	Port Size	Orifice (mm)	Flow Factor Kv(l/min)	MOPD (bar)	Max Fluid Temp. (°C)	Page Parker Valves
Direct Operated	Stainless St./Sub-base mounting	Normally Closed	SB	1.5 to 3	4.2	20	-	202

2/2 VALVES FOR BEVERAGE DISPENSING - LIQUIPURE®

DIRECT OPERATED

Beverage Dispensing

Medical / Instrumentation

STAINLESS ST. SUB-BASE MOUNTING

NORMALLY CLOSED

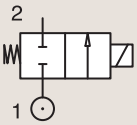

Port size	Orifice Ø	Flow factors			Operating Pressure Differential			Fluid Temp.		Seat Seal	Parker Valves			Power		Coil Group	Dwg. No.
					Min	Max(MOPD)		Min	Max								
	mm	Kv l/min	KV m³/h	Qn l/min	bar	AC bar	DC bar	°C	°C		Valve Ref.	Housing Ref.	Coil Ref.	AC W	DC W		
SB	1.5	1.3	0.08	-	0	20	20	-10	140	Ruby	2019F1GRG7	-	D4	13	16	24.0	071
	1.5	1.3	0.08	-	0	20	20	-10	140	Ruby	2019F1GRG7	-	D5	8	9	24.0	071
	1.5	1.3	0.08	-	0	20	20	-10	140	Ruby	2019F1GRG7	-	LA	9	9	24.0	071
	1.5	1.3	0.08	-	0	20	20	-10	140	Ruby	2019F1GRG7	-	LB-LC	13	16	24.0	071
	1.5	1.3	0.08	-	0	20	-	-10	140	Ruby	2019F1GRG7	-	XS03	9	-	24.0	071
	1.5	1.3	0.08	-	0	20	20	-10	140	FDA FKM	2019F1GVG7	-	D4	13	16	24.0	071
	1.5	1.3	0.08	-	0	20	20	-10	140	FDA FKM	2019F1GVG7	-	D5	8	9	24.0	071
	1.5	1.3	0.08	-	0	20	20	-10	140	FDA FKM	2019F1GVG7	-	LA	9	9	24.0	071
	1.5	1.3	0.08	-	0	20	20	-10	140	FDA FKM	2019F1GVG7	-	LB-LC	13	16	24.0	071
	1.5	1.3	0.08	-	0	20	-	-10	140	FDA FKM	2019F1GVG7	-	XS03	9	-	24.0	071
	2	2.3	0.14	-	0	15	15	-10	140	Ruby	2019F1JRG7	-	D4	13	16	24.0	071
	2	2.3	0.14	-	0	15	15	-10	140	Ruby	2019F1JRG7	-	D5	8	9	24.0	071
	2	2.3	0.14	-	0	15	15	-10	140	Ruby	2019F1JRG7	-	LA	9	9	24.0	071
	2	2.3	0.14	-	0	15	15	-10	140	Ruby	2019F1JRG7	-	LB-LC	13	16	24.0	071
	2	2.3	0.14	-	0	15	-	-10	140	Ruby	2019F1JRG7	-	XS03	9	-	24.0	071
	2	2.3	0.14	-	0	15	15	-10	140	FDA FKM	2019F1JVG7	-	D4	13	16	24.0	071
	2	2.3	0.14	-	0	15	15	-10	140	FDA FKM	2019F1JVG7	-	D5	8	9	24.0	071
	2	2.3	0.14	-	0	15	15	-10	140	FDA FKM	2019F1JVG7	-	LA	9	9	24.0	071
	2	2.3	0.14	-	0	15	15	-10	140	FDA FKM	2019F1JVG7	-	LB-LC	13	16	24.0	071
	2	2.3	0.14	-	0	15	-	-10	140	FDA FKM	2019F1JVG7	-	XS03	9	-	24.0	071
	2.5	3.2	0.19	-	0	10	10	-10	140	Ruby	2019F1LRG7	-	D4	13	16	24.0	071
	2.5	3.2	0.19	-	0	10	10	-10	140	Ruby	2019F1LRG7	-	D5	8	9	24.0	071
	2.5	3.2	0.19	-	0	10	10	-10	140	Ruby	2019F1LRG7	-	LA	9	9	24.0	071
	2.5	3.2	0.19	-	0	10	10	-10	140	Ruby	2019F1LRG7	-	LB-LC	13	16	24.0	071

For this page	Port size	Orifice (mm)	Kv (l/min)	MOPD (bar)	Fluid Temp (°C)	Amb Temp (°C)
From	SB	1.5	1.3	10	-10	-10
To	SB	2.5	3.2	20	140	50

Drawing 071

2/2 VALVES FOR BEVERAGE DISPENSING - LIQUIPURE®

DIRECT OPERATED

STAINLESS ST. SUB-BASE MOUNTING

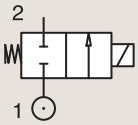

NORMALLY CLOSED

Port size	Orifice Ø	Flow factors			Operating Pressure Differential			Fluid Temp.		Seat Seal	Parker Valves			Power		Coil Group	Dwg. No.
					Min	Max(MOPD)		Min	Max		Valve Ref.	Housing Ref.	Coil Ref.				
	mm	Kv l/min	KV m³/h	Qn l/min	bar	AC bar	DC bar	°C	°C					AC W	DC W		
SB	2.5	3.2	0.19	-	0	10	-	-10	140	Ruby	**2019F1LRG7**	**-**	**XS03**	9	-	24.0	071
	2.5	3.2	0.19	-	0	10	10	-10	140	FDA FKM	**2019F1LVG7**	**-**	**D4**	13	16	24.0	071
	2.5	3.2	0.19	-	0	10	10	-10	140	FDA FKM	**2019F1LVG7**	**-**	**D5**	8	9	24.0	071
	2.5	3.2	0.19	-	0	10	10	-10	140	FDA FKM	**2019F1LVG7**	**-**	**LA**	9	9	24.0	071
	2.5	3.2	0.19	-	0	10	10	-10	140	FDA FKM	**2019F1LVG7**	**-**	**LB-LC**	13	16	24.0	071
	2.5	3.2	0.19	-	0	10	-	-10	140	FDA FKM	**2019F1LVG7**	**-**	**XS03**	9	-	24.0	071
	3	4.2	0.25	-	0	7	7	-10	140	Ruby	**2019F1NRG7**	**-**	**D4**	13	16	24.0	071
	3	4.2	0.25	-	0	7	7	-10	140	Ruby	**2019F1NRG7**	**-**	**D5**	8	9	24.0	071
	3	4.2	0.25	-	0	7	7	-10	140	Ruby	**2019F1NRG7**	**-**	**LA**	9	9	24.0	071
	3	4.2	0.25	-	0	7	7	-10	140	Ruby	**2019F1NRG7**	**-**	**LB-LC**	13	16	24.0	071
	3	4.2	0.25	-	0	7	-	-10	140	Ruby	**2019F1NRG7**	**-**	**XS03**	9	-	24.0	071
	3	4.2	0.25	-	0	7	7	-10	140	FDA FKM	**2019F1NVG7**	**-**	**D4**	13	16	24.0	071
	3	4.2	0.25	-	0	7	7	-10	140	FDA FKM	**2019F1NVG7**	**-**	**D5**	8	9	24.0	071
	3	4.2	0.25	-	0	7	7	-10	140	FDA FKM	**2019F1NVG7**	**-**	**LA**	9	9	24.0	071
	3	4.2	0.25	-	0	7	7	-10	140	FDA FKM	**2019F1NVG7**	**-**	**LB-LC**	13	16	24.0	071
	3	4.2	0.25	-	0	7	-	-10	140	FDA FKM	**2019F1NVG7**	**-**	**XS03**	9	-	24.0	071

For this page	Port size	Orifice (mm)	Kv (l/min)	MOPD (bar)	Fluid Temp (°C)	Amb Temp (°C)
From	SB	2.5	3.2	7	-10	-10
To	SB	3	4.2	10	140	50

Drawing 071

VALVES FOR DRY OR LUBRICATED AIR, NEUTRAL GASES AND LIQUIDS

Oil Water Air

3/2

Actuation	Body	Function	Port Size	Orifice (mm)	Flow Factor Kv(l/min)	MOPD (bar)	Max Fluid Temp. (°C)	Page Parker Valves	Page Parker LUCIFER® Valves
Direct Operated	Brass/Pipe mounting	Normally Closed	1/8''	1.2 to 2.5	3.5	20	140	208	
			1/8''-1/4''	2.5	3.5	7	75	-	210
			1/4''	1 to 4.5	7	30	140	208	
		Normally Open	1/4''	1.5 to 3	4.5	16	120	-	218
		Universal	1/8''	1.5 to 2.5	3.5	10	140	220	
			1/4''	0.8 to 3.5	5	30	140	220	
		Control by Electric Impulse	1/4''	1.5	1.5	16	100	-	224
	Brass/Sub-base mounting	Normally Closed	SB	1.3	1	20	140	226	
			3.5 mm	1.2 to 1.5	0.9	10	75	-	228
			5 mm	1 to 2.5	3.5	16	120	-	228
		Normally Open	5 mm	1.5 to 2.5	2.2	15	120	-	230
		Universal	1/8''-1/5''	1.5	1.5	10	120	-	232
			5 mm	1.5 to 2.5	3.5	10	120	-	232
	Anodized aluminium/ Banjo	Normally Closed	1/8''	1.2	-	10	50	-	234
	303 Stainless St./Sub-base mounting	Normally Closed	5 mm	1.5	1.5	15	100	-	236
	POM/Sub-base mounting	Normally Closed	3 mm	2	2	10	50	-	238
Pilot Operated	Anodized aluminium/ Pipe mounting	Normally Closed	1/4''	6.5 to 8	20	15	75	-	240
			1/2''	14	-	15	75	-	242
		Normally Open	1/4''	8	20	40	75	-	242
			1/2''	14	-	15	100	-	244
	Anodized aluminium/ Sub-base mounting/ Poppet	Normally Closed	1/2''	15	-	10	75	-	244

3/2 VALVES FOR DRY OR LUBRICATED AIR, NEUTRAL GASES AND LIQUIDS
DIRECT OPERATED

Industrial Equipment

Commercial Equipment

Process

BRASS
PIPE MOUNTING
NORMALLY CLOSED

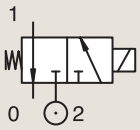

Port size	Orifice Ø		Flow factors				Operating Pressure Differential			Fluid Temp.		Seat Seal	Parker Valves			Power		Coil Group	Dwg. No.
	1	(2)	1	(2)	1	(2)	Min	Max(MOPD)		Min	Max		Valve Order Number	Valve Type	Coil Type	AC W	DC W		
BSP	mm		Kv l/min		KV l/min		bar	AC bar	DC bar	°C	°C								
1/8"	1.2	1.6	0.7	-	0.04	-	0	8	-	-10	140	FKM	398102 1	N79.4IV	WB4.5 115/50-60	4.5	-	1.3	066
	1.2	1.6	0.7	-	0.04	-	0	14	-	-10	140	FKM	398104 1	N79.4IV	WB4.5 230/50-60	4.5	-	1.3	066
	1.2	1.6	0.7	-	0.04	-	0	14	-	-10	140	FKM	398120 1	N79.4IV	WB4.5 24/50-60	4.5	-	1.3	066
	1.2	1.6	0.7	-	0.04	-	0	14	-	-10	140	FKM	398100 1	N79.4IV	WB4.5 42/50-60	4.5	-	1.3	066
	1.5	1.6	1	-	0.06	-	0	8	-	-10	140	FKM	398112 1	N79.4AV	WB4.5 230/50-60	4.5	-	1.3	066
	1.5	1.6	1	-	0.06	-	0	8	-	-10	140	FKM	398122 1	N79.4AV	WB4.5 24/50-60	4.5	-	1.3	066
	1.5	1.6	1	-	0.06	-	0	8	-	-10	140	FKM	398138 1	N79.6AV	WB4.5 115/50-60	4.5	-	1.3	080
	1.5	1.6	1	-	0.06	-	0	8	-	-10	140	FKM	398130U 1	N79.6AV	WB4.5 115/60	4.5	-	1.3	080
	1.5	1.6	1	-	0.06	-	0	8	-	-10	140	FKM	398114 1	N79.6AV	WB4.5 230/50-60	4.5	-	1.3	080
	1.5	1.6	1	-	0.06	-	0	8	-	-10	140	FKM	398142 1	N79.6AV	WB4.5 240/50-60	4.5	-	1.3	080
	1.5	1.5	1.2	-	0.07	-	0	20	-	-10	140	FKM	362560J	PM141AV	ZB09	9	-	20.1/20.2	029
	2	1.6	1.5	-	0.09	-	0	5	-	-10	140	FKM	398134U 1	N79.6BV	WB4.5 115/60	4.5	-	1.3	080
	2	1.6	1.5	-	0.09	-	0	5	-	-10	140	FKM	398136U 1	N79.6BV	WB4.5 208-240/60	4.5	-	1.3	080
	2	1.6	1.5	-	0.09	-	0	5	-	-10	140	FKM	398132 1	N79.6BV	WB4.5 230/50-60	4.5	-	1.3	080
	2	2.5	2	-	0.12	-	0	15	-	-10	140	FKM	362570J	PM141BV	ZB09	9	-	20.1/20.2	029
1/4"	2	2.5	2	-	0.12	-	0	15	-	-10	140	FKM	362620J	PM141FV	ZB09	9	-	20.1/20.2	033
	2.5	2.5	2.8	-	0.17	-	0	9	-	-10	140	FKM	362630J	PM141GV	ZB09	9	-	20.1/20.2	033

Notes:

1. Ordering number is for an assembled valve and coil, with the voltage shown.

For this page	Port size	Orifice (mm)	Kv (l/min)	MOPD (bar)	Fluid Temp (°C)	Amb Temp (°C)
From	1/8''	1.2	0.7	5	-10	-10
To	1/4''	2.5	2.8	20	140	50

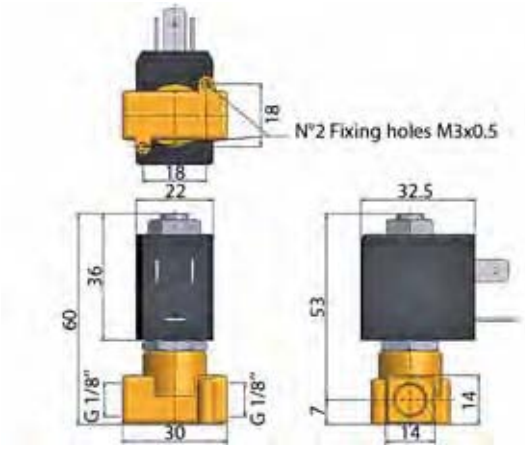

Drawing 066

Drawing 080

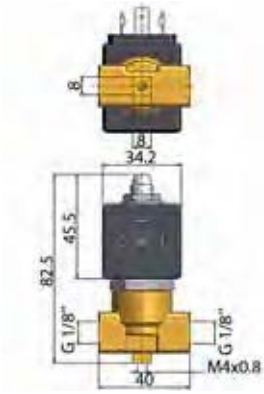

Drawing 029

Drawing 033

3/2 VALVES FOR DRY OR LUBRICATED AIR, NEUTRAL GASES AND LIQUIDS

DIRECT OPERATED

BRASS

PIPE MOUNTING

NORMALLY CLOSED

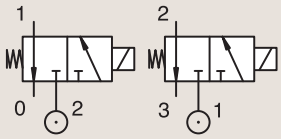

Port size	Orifice Ø		Flow factors				Operating Pressure Differential			Fluid Temp.		Seat Seal	Parker LUCIFER® Valves			IS	Power		Coil Group	Dwg. No.
	1	(2)	1	(2)	1	(2)	Min	Max (MOPD)		Min	Max									
BSP	mm		Kv l/min		KV l/min		bar	AC bar	DC bar	°C	°C		Valve Ref.	Housing Ref.	Coil Ref.		AC W	DC W		
1/8"	1.2	1.5	0.7	0.9	0.04	0.05	0	10	10	-10	75	FKM	**131M15**	**8993**	**488980**		2	2.5	1.1	3382
	1.5	1.5	0.9	0.9	0.05	0.05	0	7	7	-10	75	FKM	**131M14**	**8993**	**488980**		2	2.5	1.1	3382
	1.5	1.5	1.5	1.5	0.09	0.09	0	15	15	-10	120	FKM	**E131K14**	**4270**	**481000**		8	8	2.1	3510
	1.5	1.5	1.5	1.5	0.09	0.09	0	15	15	-10	100	FKM	**E131K14**	**2995**	**481865**		8	9	2.1	3510
	2	2.5	2.5	3.5	0.15	0.21	0	10	10	-10	120	FKM	**131K16**	**4270**	**481000**		8	8	2.1	3510
	2	2.5	2.5	3.5	0.15	0.21	0	10	10	-10	100	FKM	**131K16**	**2995**	**481865**		8	9	2.1	3510
	2	2.5	2.5	3.5	0.15	0.21	0	10	10	-10	120	FKM	**131K1650**[1]	**4270**	**481000**		8	8	2.1	3510
	2	2.5	2.5	3.5	0.15	0.21	0	10	10	-10	100	FKM	**131K1650**[1]	**2995**	**481865**		8	9	2.1	3510
	2.5	2.5	3.5	3.5	0.21	0.21	0	7	7	-10	120	FKM	**E131K13**	**4270**	**481000**		8	8	2.0	3510
	2.5	2.5	3.5	3.5	0.21	0.21	0	7	7	-10	100	FKM	**E131K13**	**2995**	**481865**		8	9	2.0	3510
	2.5	2.5	3.5	3.5	0.21	0.21	0	7	7	-10	100	FKM	**E131K13**	**4270**	**486265**		14	14	2.0	3510
1/8"-1/4"	2.5	2.5	3	3	0.18	0.18	0	-	2	-20	75	PUR	**131K0397**	**2995**	**482740**		-	1.6	6.0/8.0	8023
	2.5	2.5	3	3	0.18	0.18	0	2	2	-20	75	PUR	**131K0397**	**-**	**495900**		2.5	2	6.0/8.0	8023
	2.5	2.5	3	3	0.18	0.18	0	-	2	-20	75	PUR	**131K0397**	**-**	**495910**	*	-	0.3 to 3	6.0/8.0	8023
	2.5	2.5	3.5	3.5	0.21	0.21	0	7	7	-40	75	PUR	**E131K0358**[1]	**4270**	**481000**		8	8	2.1	3510
	2.5	2.5	3.5	3.5	0.21	0.21	0	7	7	-40	75	PUR	**E131K0358**[1]	**2995**	**481865**		8	9	2.1	3510
1/4"	1	1	0.6	0.6	0.03	0.03	0	-	10	-10	55	FKM	**131K0490**	**2995**	**483580.01**	*	-	0.5 to 3	7.0/8.0	7058
	1	1	0.6	0.6	0.03	0.03	0	-	10	-10	75	FKM	**131K0490**	**-**	**488660.01**	*	-	0.3 to 3	7.0/8.0	7058
	1	1	0.6	-	0.03	-	0	-	10	-10	75	FKM	**131K0490**	**-**	**495910**	*	-	0.3 to 3	7.0/8.0	7058

Notes:

1. With manual override

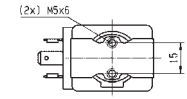

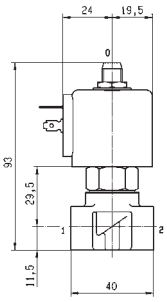

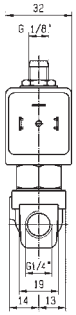

Drawing 7058

For this page	Port size	Orifice (mm)	Kv (l/min)	MOPD (bar)	Fluid Temp (°C)	Amb Temp (°C)
From	1/8"	1	0.6	2	-40	-40
To	1/4"	2.5	3.5	15	120	50

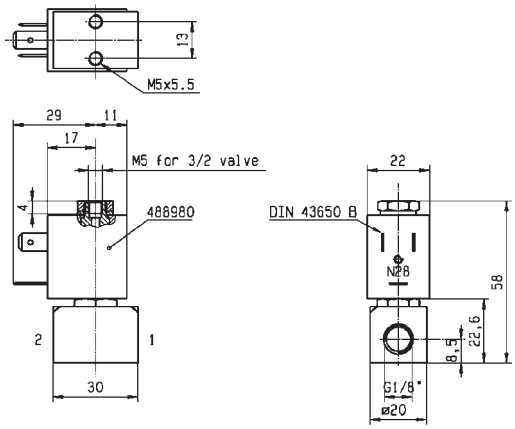

Drawing 3382

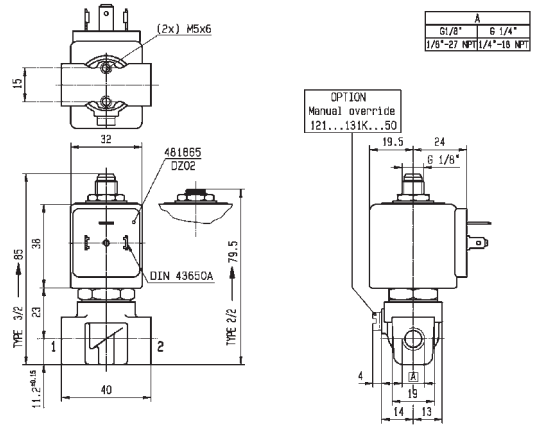

Drawing 3510

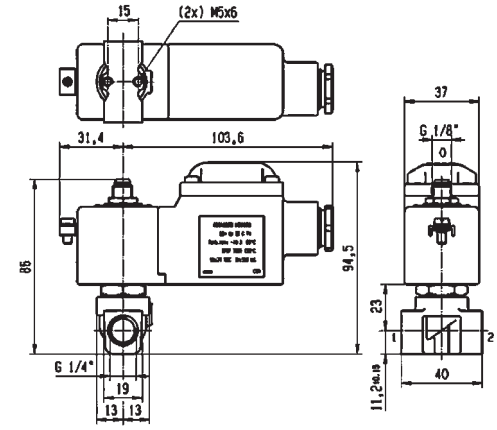

Drawing 8023

3/2 VALVES FOR DRY OR LUBRICATED AIR, NEUTRAL GASES AND LIQUIDS

DIRECT OPERATED

BRASS

PIPE MOUNTING

NORMALLY CLOSED

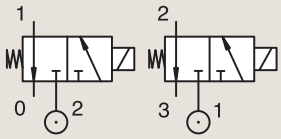

Port size	Orifice Ø		Flow factors				Operating Pressure Differential			Fluid Temp.		Seat Seal	Parker LUCIFER® Valves			IS	Power		Coil Group	Dwg. No.
	1	(2)	1	(2)	1	(2)	Min	Max (MOPD)		Min	Max		Valve Ref.	Housing Ref.	Coil Ref.					
BSP	mm		Kv l/min		KV l/min		bar	AC bar	DC bar	°C	°C						AC W	DC W		
1/4"	1.2	1.5	0.8	1.5	0.05	0.09	0	30	-	-30	130	Ruby	**E131K64**	**4270**	**481000**		8	-	2.0	3510
	1.2	1.5	0.8	1.5	0.05	0.09	0	30	30	-30	140	Ruby	**E131K64**	**4270**	**486265**		14	14	2.0	3510
	1.2	1.5	0.8	1.5	0.05	0.09	0	30	-	-30	130	Ruby	**E131K6450** [1]	**4270**	**481000**		8	-	2.0	3510
	1.2	1.5	0.8	1.5	0.05	0.09	0	30	30	-30	140	Ruby	**E131K6450** [1]	**4270**	**486265**		14	14	2.0	3510
	1.5	1.5	1.5	1.5	0.09	0.09	0	-	7	-20	75	PUR	**131K0497**	**2995**	**482740**		-	1.6	6.0/8.0	8023
	1.5	1.5	1.5	1.5	0.09	0.09	0	7	7	-20	75	PUR	**131K0497**	**-**	**495900**		2.5	2	6.0/8.0	8023
	1.5	1.5	1.5	1.5	0.09	0.09	0	-	7	-20	75	PUR	**131K0497**	**-**	**495910**	*	-	0.3 to 3	6.0/8.0	8023
	1.5	1.5	1.5	1.5	0.09	0.09	0	-	7	-20	75	PUR	**131K0497**	**2995**	**496125**		-	1.6	6.0/8.0	8023
	1.5	1.5	1.5	1.5	0.09	0.09	0	16	16	-10	120	FKM	**E131K04**	**4270**	**481000**		8	8	2.0	3510
	1.5	1.5	1.5	1.5	0.09	0.09	0	16	16	-10	100	FKM	**E131K04**	**2995**	**481865**		8	9	2.0	3510
	1.5	1.5	1.5	1.5	0.09	0.09	0	16	16	-10	120	FKM	**E131K04**	**4270**	**486265**		14	14	2.0	3510
	1.5	1.5	1.5	1.5	0.09	0.09	0	15	15	-10	120	FKM	**E131K0450** [1]	**4270**	**481000**		8	8	2.1	3510
	1.5	1.5	1.5	1.5	0.09	0.09	0	15	15	-10	100	FKM	**E131K0450** [1]	**2995**	**481865**		8	9	2.1	3510
	2	3	2.5	4.5	0.15	0.27	0	10	10	-10	75	FKM	**131T23**	**4270**	**481000**		8	8	2.0	3223
	2	3	2.5	4.5	0.15	0.27	0	10	10	-10	75	FKM	**131T23**	**2995**	**481865**		8	9	2.0	3223
	2	3	2.5	4.5	0.15	0.27	0	10	10	-10	75	FKM	**131T23**	**4270**	**486265**		14	14	2.0	3223
	2	3	2.5	4.5	0.15	0.27	0	10	10	-10	75	FKM	**131T2301** [1]	**4270**	**481000**		8	8	2.0	3223
	2	3	2.5	4.5	0.15	0.27	0	10	10	-10	75	FKM	**131T2301** [1]	**2995**	**481865**		8	9	2.0	3223
	2	3	2.5	4.5	0.15	0.27	0	10	10	-10	75	FKM	**131T2301** [1]	**4270**	**486265**		14	14	2.0	3223

Notes:

1. With manual override

For this page	Port size	Orifice (mm)	Kv (l/min)	MOPD (bar)	Fluid Temp (°C)	Amb Temp (°C)
From	1/4"	1.2	0.8	7	-30	-20
To	1/4"	2	2.5	30	140	50

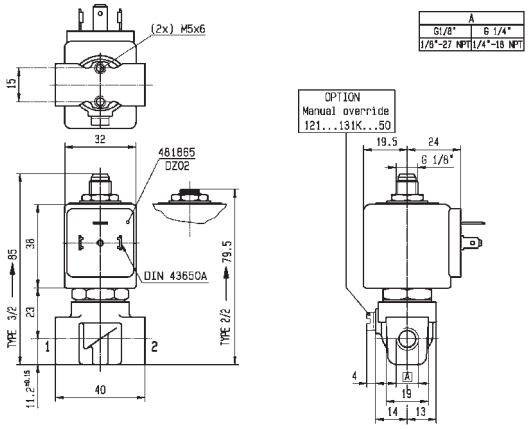

Drawing 3510

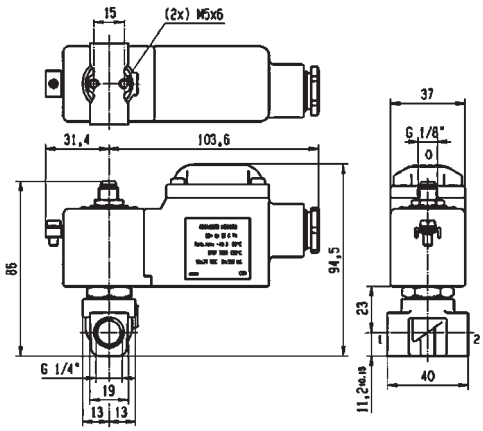

Drawing 8023

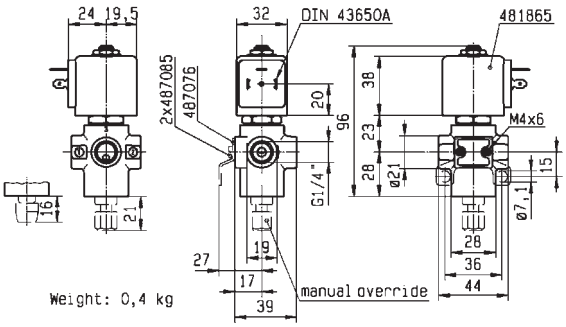

Drawing 3223

3/2 VALVES FOR DRY OR LUBRICATED AIR, NEUTRAL GASES AND LIQUIDS

DIRECT OPERATED

BRASS

PIPE MOUNTING

NORMALLY CLOSED

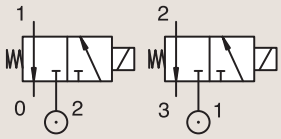

Port size	Orifice Ø		Flow factors				Operating Pressure Differential			Fluid Temp.		Seat Seal	Parker LUCIFER® Valves			Power		Coil Group	Dwg. No.
	1	(2)	1	(2)	1	(2)	Min	Max (MOPD)		Min	Max								
BSP	mm		Kv l/min		KV l/min		bar	AC bar	DC bar	°C	°C		Valve Ref.	Housing Ref.	Coil Ref.	AC W	DC W		
1/4"	2	2.5	2.5	3.5	0.15	0.21	0	10	10	-10	120	FKM	**E131K06**	**4270**	**481000**	8	8	2.0	8119
	2	2.5	2.5	3.5	0.15	0.21	0	10	10	-10	100	FKM	**E131K06**	**2995**	**481865**	8	9	2.0	8119
	2	2.5	2.5	3.5	0.15	0.21	0	10	10	-10	120	FKM	**E131K06**	**4270**	**486265**	14	14	2.0	8119
	2	2.5	2.5	3.5	0.15	0.21	0	10	10	-10	120	FKM	**E131K0650** [1]	**4270**	**481000**	8	8	2.1	3510
	2	2.5	2.5	3.5	0.15	0.21	0	10	10	-10	100	FKM	**E131K0650** [1]	**2995**	**481865**	8	9	2.1	3510
	2.5	2.5	3	3	0.18	0.18	0	-	2	-20	75	PUR	**131K0397**	**2995**	**496125**	-	1.6	6.0/8.0	8023
	2.5	3.5	3.5	5.5	0.21	0.33	0	7	7	-10	75	FKM	**131T29**	**4270**	**481000**	8	8	2.1	3223
	2.5	3.5	3.5	5.5	0.21	0.33	0	7	7	-10	75	FKM	**131T29**	**2995**	**481865**	8	9	2.1	3223
	2.5	3.5	3.5	5.5	0.21	0.33	0	7	7	-10	75	FKM	**131T2901** [1]	**4270**	**481000**	8	8	2.1	3223
	2.5	3.5	3.5	5.5	0.21	0.33	0	7	7	-10	75	FKM	**131T2901** [1]	**2995**	**481865**	8	9	2.1	3223

Notes:

1. With manual override

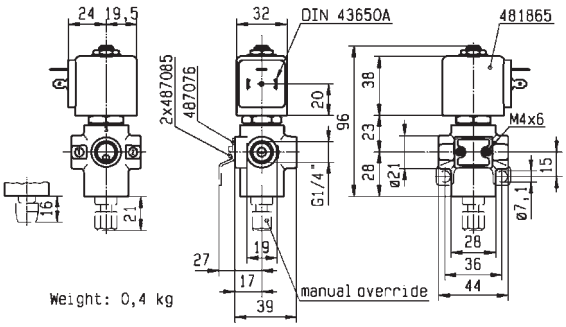

Drawing 3223

For this page	Port size	Orifice (mm)	Kv (l/min)	MOPD (bar)	Fluid Temp (°C)	Amb Temp (°C)
From	1/4"	2	2.5	2	-20	-20
To	1/4"	2.5	3.5	3.5	120	50

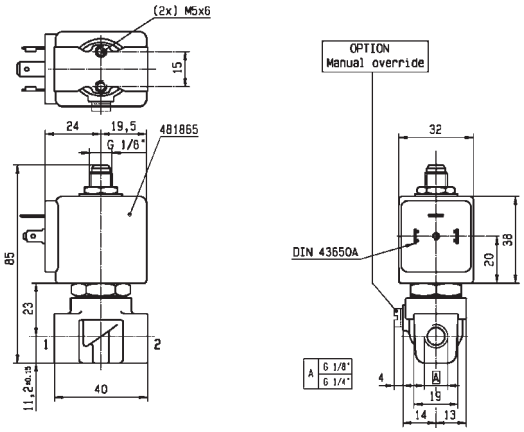

Drawing 8119

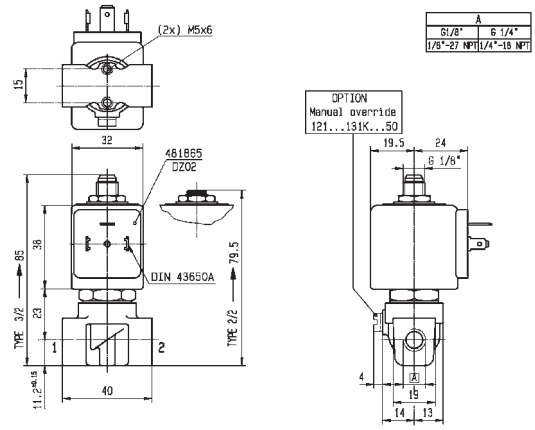

Drawing 3510

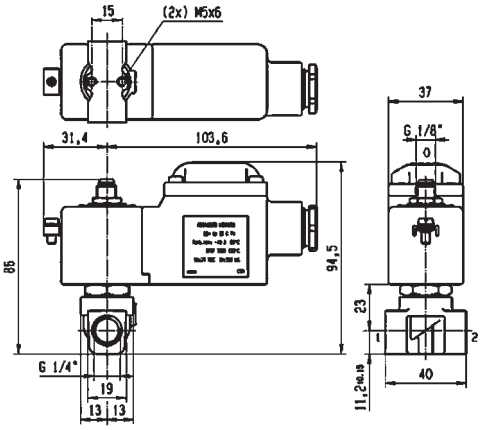

Drawing 8023

3/2 VALVES FOR DRY OR LUBRICATED AIR, NEUTRAL GASES AND LIQUIDS

DIRECT OPERATED

BRASS

PIPE MOUNTING

NORMALLY CLOSED

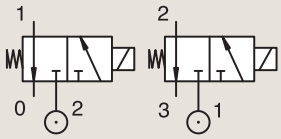

Port size	Orifice Ø		Flow factors				Operating Pressure Differential			Fluid Temp.		Seat Seal	Parker LUCIFER® Valves			Power		Coil Group	Dwg. No.
	1	(2)	1	(2)	1	(2)	Min	Max (MOPD)		Min	Max		Valve Ref.	Housing Ref.	Coil Ref.				
BSP	mm		Kv l/min		KV l/min		bar	AC bar	DC bar	°C	°C					AC W	DC W		
1/4"	2.5	6	2.7	15	0.16	0.9	0.1	7	7	-10	75	FKM	**E131E03**	**4270**	**481000**	8	8	2.0	3525
	2.5	6	2.7	15	0.16	0.9	0.1	7	7	-10	75	FKM	**E131E03**	**2995**	**481865**	8	9	2.0	3525
	2.5	6	2.7	15	0.16	0.9	0.1	7	7	-10	75	FKM	**E131E03**	**4270**	**486265**	14	14	2.0	3525
	2.5	2.5	3.5	3.5	0.21	0.21	0	7	7	-10	100	FKM	**E131K03**	**4270**	**481000**	8	8	2.0	3510
	2.5	2.5	3.5	3.5	0.21	0.21	0	7	7	-10	100	FKM	**E131K03**	**2995**	**481865**	8	9	2.0	3510
	2.5	2.5	3.5	3.5	0.21	0.21	0	7	7	-40	75	PUR	**E131K0308**	**4270**	**481000**	8	8	2.1	3510
	2.5	2.5	3.5	3.5	0.21	0.21	0	7	7	-40	75	PUR	**E131K0308**	**2995**	**481865**	8	9	2.1	3510
	2.5	2.5	3.5	3.5	0.21	0.21	0	7	7	-10	120	FKM	**E131K0350**[1]	**4270**	**481000**	8	8	2.1	3510
	2.5	2.5	3.5	3.5	0.21	0.21	0	7	7	-10	100	FKM	**E131K0350**[1]	**2995**	**481865**	8	9	2.1	3510
	2.5	2.5	3.5	3.5	0.21	0.21	0	7	7	-30	130	Ruby	**E131K63**	**4270**	**481000**	8	8	2.0	3510
	2.5	2.5	3.5	3.5	0.21	0.21	0	7	7	-30	100	Ruby	**E131K63**	**2995**	**481865**	8	9	2.0	3510
	2.5	2.5	3.5	3.5	0.21	0.21	0	7	7	-30	130	Ruby	**E131K6350**[1]	**4270**	**481000**	8	8	2.1	3510
	2.5	2.5	3.5	3.5	0.21	0.21	0	7	7	-30	100	Ruby	**E131K6350**[1]	**2995**	**481865**	8	9	2.1	3510
	3	4	4.5	6	0.27	0.36	0	10	-	-10	75	FKM	**131T22**	**4270**	**481044**	14	-	2.2	3223
	3	4	4.5	6	0.27	0.36	0	10	-	-10	75	FKM	**131T22**	**2995**	**492425**	14	-	2.2	3223
	4.5	6	7	9	0.42	0.54	0	2	2	-10	75	FKM	**131T21**	**4270**	**481000**	8	8	2.0	3223
	4.5	6	7	9	0.42	0.54	0	2	2	-10	75	FKM	**131T21**	**2995**	**481865**	8	9	2.0	3223
	4.5	6	7	9	0.42	0.54	0	2	2	-10	75	FKM	**131T21**	**4270**	**486265**	14	14	2.0	3223

Notes:

1. With manual override

For this page	Port size	Orifice (mm)	Kv (l/min)	MOPD (bar)	Fluid Temp (°C)	Amb Temp (°C)
From	1/4"	2.5	2.7	2	-40	-40
To	1/4"	4.5	7	10	130	50

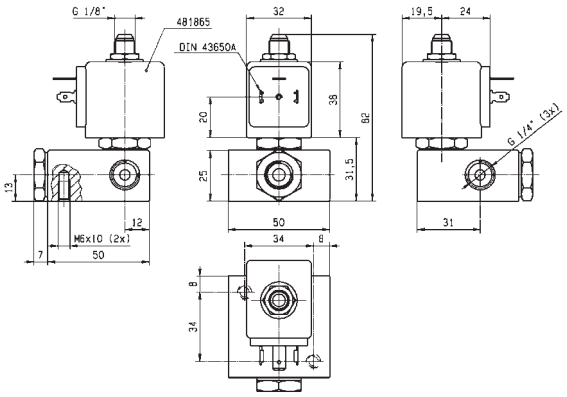

Drawing 3525

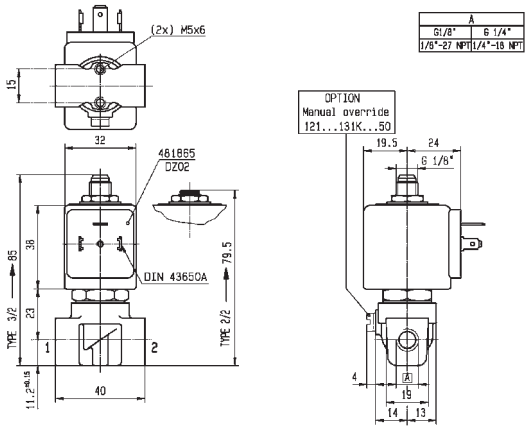

Drawing 3510

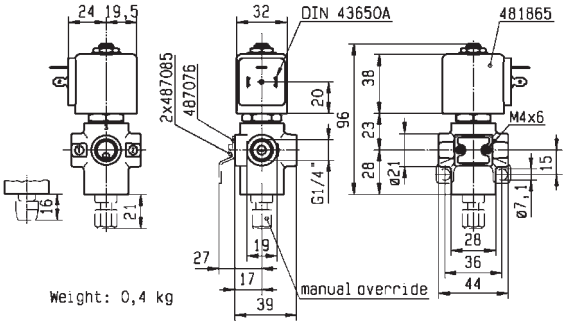

Drawing 3223

3/2 VALVES FOR DRY OR LUBRICATED AIR, NEUTRAL GASES AND LIQUIDS
DIRECT OPERATED

BRASS
PIPE MOUNTING
NORMALLY OPEN

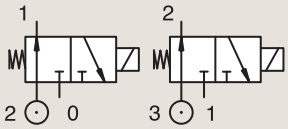

Port size	Orifice Ø		Flow factors				Operating Pressure Differential			Fluid Temp.		Seat Seal	Parker LUCIFER® Valves			Power		Coil Group	Dwg. No.
	1	(2)	1	(2)	1	(2)	Min	Max (MOPD)		Min	Max		Valve Ref.	Housing Ref.	Coil Ref.				
BSP	mm		Kv l/min		KV l/min		bar	AC bar	DC bar	°C	°C					AC W	DC W		
1/4"	1.5	1.5	1.4	1.4	0.08	0.08	0	16	16	-10	120	FKM	**132K04**	**4270**	**481000**	8	8	2.1	3510
	1.5	1.5	1.4	1.4	0.08	0.08	0	16	16	-10	100	FKM	**132K04**	**2995**	**481865**	8	9	2.1	3510
	2	2	1.8	1.8	0.10	0.10	0	10	10	-10	120	FKM	**132K06**	**4270**	**481000**	8	8	2.1	3510
	2	2	1.8	1.8	0.10	0.10	0	10	10	-10	100	FKM	**132K06**	**2995**	**481865**	8	9	2.1	3510
	2	3	2.5	4.5	0.15	0.27	0	10	5	-10	75	FKM	**132T23**	**4270**	**481000**	8	8	2.0	3223
	2	3	2.5	4.5	0.15	0.27	0	10	5	-10	75	FKM	**132T23**	**2995**	**481865**	8	9	2.0	3223
	2	3	2.5	4.5	0.15	0.27	0	-	10	-10	75	FKM	**132T23**	**4270**	**486265**	-	14	2.0	3223
	2	3	2.5	4.5	0.15	0.27	0	10	5	-10	75	FKM	**132T2301** [1]	**4270**	**481000**	8	8	2.0	3223
	2	3	2.5	4.5	0.15	0.27	0	10	5	-10	75	FKM	**132T2301** [1]	**2995**	**481865**	8	9	2.0	3223
	2	3	2.5	4.5	0.15	0.27	0	-	10	-10	75	FKM	**132T2301** [1]	**4270**	**486265**	-	14	2.0	3223
	2.5	2.5	2.2	2.2	0.13	0.13	0	7	7	-10	120	FKM	**132K03**	**4270**	**481000**	8	8	2.1	3510
	2.5	2.5	2.2	2.2	0.13	0.13	0	7	7	-10	100	FKM	**132K03**	**2995**	**481865**	8	9	2.1	3510
	3	4	4.5	6	0.27	0.36	0	10	-	-10	75	FKM	**132T22**	**4270**	**481044**	14	-	2.2	3223
	3	4	4.5	6	0.27	0.36	0	7	-	-10	75	FKM	**132T22**	**2995**	**492425**	14	-	2.2	3223

Notes:

1. With manual override

For this page	Port size	Orifice (mm)	Kv (l/min)	MOPD (bar)	Fluid Temp (°C)	Amb Temp (°C)
From	1/4"	1.5	1.4	5	-10	-30
To	1/4"	3	4.5	16	120	50

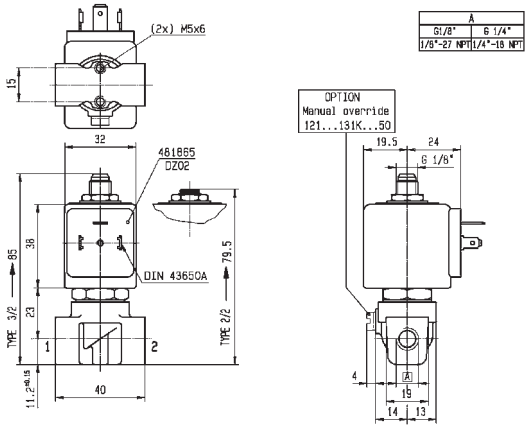

Drawing 3510

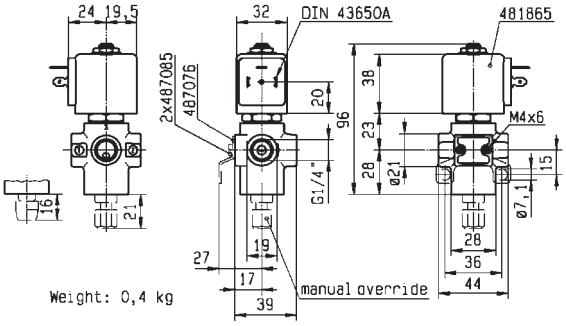

Drawing 3223

3/2 VALVES FOR DRY OR LUBRICATED AIR, NEUTRAL GASES AND LIQUIDS

DIRECT OPERATED

BRASS

PIPE MOUNTING

UNIVERSAL

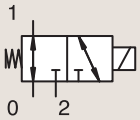

Port size	Orifice Ø		Flow factors				Operating Pressure Differential			Fluid Temp.		Seat Seal	Parker Valves			Power		Coil Group	Dwg. No.
	1	(2)	1	(2)	1	(2)	Min	Max(MOPD)		Min	Max		Valve Order Number	Valve Type	Coil Type				
BSP	mm		Kv l/min		KV l/min		bar	AC bar	DC bar	°C	°C					AC W	DC W		
1/8"	1.5	1.5	1.2	-	0.07	-	0	10	-	-10	140	FKM	**362410J**	**PM139AV**	**ZB09**	9	-	20.1/20.2	022
	1.5	1.5	1.2	-	0.07	-	0	-	10	-10	140	FKM	**362410J**	**PM139AV**	**ZB12**	-	12	20.1/20.2	022
1/4"	2	2	2	-	0.12	-	0	7	-	-10	140	FKM	**362460J**	**PM139FV**	**ZB09**	9	-	20.1/20.2	022
	2	2	2	-	0.12	-	0	-	7	-10	140	FKM	**362460J**	**PM139FV**	**ZB12**	-	12	20.1/20.2	022
	2.5	2.5	2.8	-	0.17	-	0	4	-	-10	140	FKM	**362470J**	**PM139GV**	**ZB09**	9	-	20.1/20.2	022
	2.5	2.5	2.8	-	0.17	-	0	-	4	-10	140	FKM	**362470J**	**PM139GV**	**ZB12**	-	12	20.1/20.2	022
	3.5	2.5	5	-	0.3	-	0	1	-	-10	140	FKM	**362475J**	**PM139LV**	**ZB09**	9	-	20.1/20.2	022
	3.5	2.5	5	-	0.3	-	0	-	1	-10	140	FKM	**362475J**	**PM139LV**	**ZB12**	-	12	20.1/20.2	022

For this page	Port size	Orifice (mm)	Kv (l/min)	MOPD (bar)	Fluid Temp (°C)	Amb Temp (°C)
From	1/8"	1.5	1.2	1	-10	-10
To	1/4"	3.5	5	5	140	50

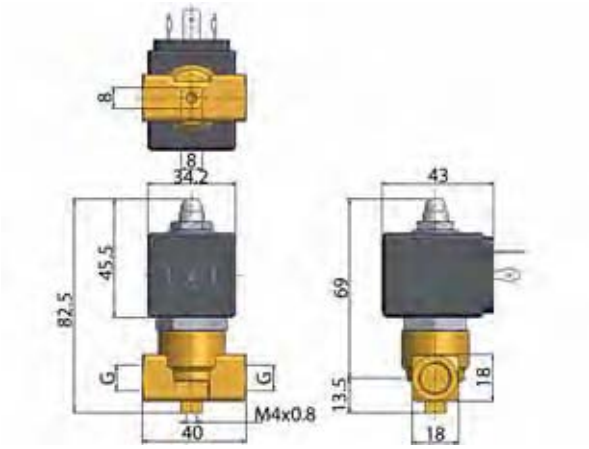

Drawing 022

3/2 VALVES FOR DRY OR LUBRICATED AIR, NEUTRAL GASES AND LIQUIDS

DIRECT OPERATED

BRASS

PIPE MOUNTING

UNIVERSAL

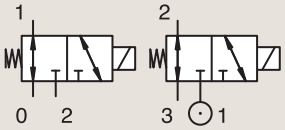

Port size	Orifice Ø		Flow factors				Operating Pressure Differential			Fluid Temp.		Seat Seal	Parker LUCIFER® Valves			IS	Power		Coil Group	Dwg. No.
	1	(2)	1	(2)	1	(2)	Min	Max (MOPD)		Min	Max		Valve Ref.	Housing Ref.	Coil Ref.		AC	DC		
BSP	mm		Kv l/min		KV m³/h		bar	AC bar	DC bar	°C	°C						W	W		
1/8"	1.5	1.5	1.5	1.5	0.09	0.09	0	10	10	-10	100	FKM	E133K14	2995	481865		8	9	2.1	3510
	1.5	1.5	1.5	1.5	0.09	0.09	0	10	10	-10	120	FKM	E133K14	4270	481000		8	8	2.1	3510
	2	2	2.5	2.5	0.15	0.15	0	7	7	-10	100	FKM	E133K16	2995	481865		8	9	2.1	3510
	2	2	2.5	2.5	0.15	0.15	0	7	7	-10	120	FKM	E133K16	4270	481000		8	8	2.1	3510
	2.5	2.5	3.5	3.5	0.21	0.21	0	4	4	-10	100	FKM	E133K13	2995	481865		8	9	2.1	3510
	2.5	2.5	3.5	3.5	0.21	0.21	0	4	4	-10	120	FKM	E133K13	4270	481000		8	8	2.1	3510
1/4"	0.8	0.8	0.3	0.3	0.02	0.02	0	30	30	-10	100	FKM	E133K05	2995	481865		8	9	2.1	3510
	0.8	0.8	0.3	0.3	0.02	0.02	0	30	30	-10	120	FKM	E133K05	4270	481000		8	8	2.1	3510
	0.8	0.8	0.3	0.3	0.02	0.02	0	30	30	-10	120	FKM	E133K05	4270	486265		14	14	2.0	3510
	1.5	1.5	1.5	1.5	0.09	0.09	0	-	3	-20	75	PUR	133K0497	2995	482740		-	1.6	6.0/8.0	8023
	1.5	1.5	1.5	1.5	0.09	0.09	0	3	3	-20	75	PUR	133K0497	-	495900		2.5	2	6.0/8.0	8023
	1.5	1.5	1.5	1.5	0.09	0.09	0	-	3	-20	75	PUR	133K0497	-	495910	*	-	0.3 to 3	6.0/8.0	8023
	1.5	1.5	1.5	1.5	0.09	0.09	0	-	3	-20	75	PUR	133K0497	2995	496125		-	1.6	6.0/8.0	8023
	1.5	1.5	1.5	1.5	0.09	0.09	0	10	10	-10	100	FKM	E133K04	2995	481865		8	9	2.0	3510
	1.5	1.5	1.5	1.5	0.09	0.09	0	10	10	-10	120	FKM	E133K04	4270	481000		8	8	2.0	3510
	1.5	1.5	1.5	1.5	0.09	0.09	0	10	10	-10	120	FKM	E133K04	4270	486265		14	14	2.0	3510
	1.5	1.5	1.5	1.5	0.09	0.09	0	10	10	-10	100	FKM	E133K0450 [1]	2995	481865		8	9	2.1	3510
	1.5	1.5	1.5	1.5	0.09	0.09	0	10	10	-10	120	FKM	E133K0450 [1]	4270	481000		8	8	2.1	3510
	2	2	2.5	2.5	0.15	0.15	0	7	7	-10	75	FKM	133T23	2995	481865		8	9	2.1	3223
	2	2	2.5	2.5	0.15	0.15	0	7	7	-10	75	FKM	133T23	4270	481000		8	8	2.1	3223
	2	2	2.5	2.5	0.15	0.15	0	7	7	-10	75	FKM	133T2301 [1]	2995	481865		8	9	2.1	3223
	2	2	2.5	2.5	0.15	0.15	0	7	7	-10	75	FKM	133T2301 [1]	4270	481000		8	8	2.1	3223
	2	2	2.5	2.5	0.15	0.15	0	7	7	-10	100	FKM	E133K06	2995	481865		8	9	2.0/3.0	3510
	2	2	2.5	2.5	0.15	0.15	0	7	7	-10	120	FKM	E133K06	4270	481000		8	8	2.0/3.0	3510
	2	2	2.5	2.5	0.15	0.15	0	7	7	-10	120	FKM	E133K06	4270	486265		14	14	2.0/3.0	3510
	2	2	2.5	2.5	0.15	0.15	0	7	7	-10	100	FKM	E133K0650 [1]	2995	481865		8	9	2.1	3510
	2	2	2.5	2.5	0.15	0.15	0	7	7	-10	120	FKM	E133K0650 [1]	4270	481000		8	8	2.1	3510
	2.5	2.5	3.5	3.5	0.21	0.21	0	4	4	-10	100	FKM	E133K03	2995	481865		8	9	2.0	3510
	2.5	2.5	3.5	3.5	0.21	0.21	0	4	4	-10	120	FKM	E133K03	4270	481000		8	8	2.0	3510
	2.5	2.5	3.5	3.5	0.21	0.21	0	4	4	-10	120	FKM	E133K03	4270	486265		14	14	2.0	3510
	2.5	2.5	3.5	3.5	0.21	0.21	0	4	4	-10	100	FKM	E133K0350 [1]	2995	481865		8	9	2.1	3510
	2.5	2.5	3.5	3.5	0.21	0.21	0	4	4	-10	120	FKM	E133K0350 [1]	4270	481000		8	8	2.1	3510
	3	3	4.5	4.5	0.27	0.27	0	2	2	-10	75	FKM	133T21	2995	481865		8	9	2.1	3223
	3	3	4.5	4.5	0.27	0.27	0	2	2	-10	75	FKM	133T21	4270	481000		8	8	2.1	3223

Notes:

1. With manual override

For this page	Port size	Orifice (mm)	Kv (l/min)	MOPD (bar)	Fluid Temp (°C)	Amb Temp (°C)
From	1/8"	0.8	0.3	2	-20	-20
To	1/4"	3	4.5	30	120	50

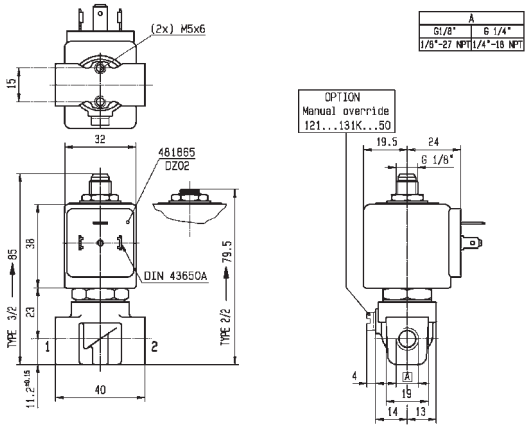

Drawing 3510

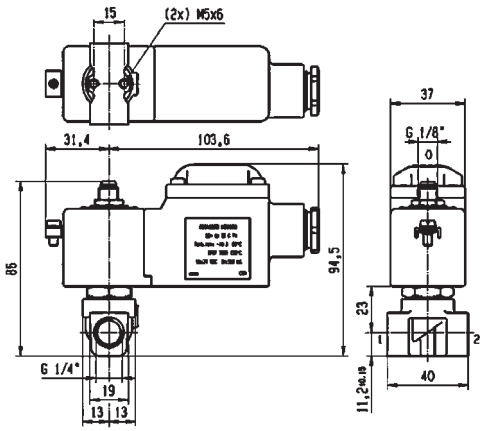

Drawing 8023

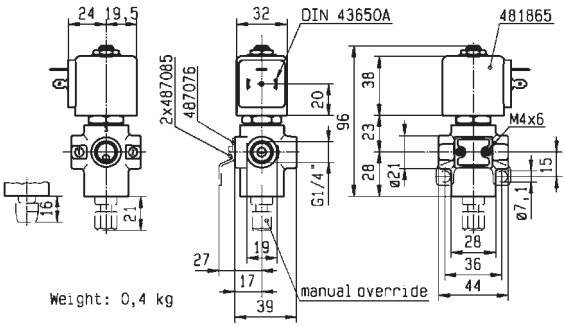

Drawing 3223

3/2 VALVES FOR DRY OR LUBRICATED AIR, NEUTRAL GASES AND LIQUIDS
DIRECT OPERATED

BRASS
PIPE MOUNTING
UNIVERSAL

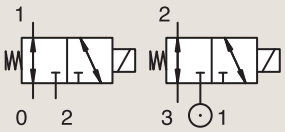

Port size	Orifice Ø		Flow factors				Operating Pressure Differential			Fluid Temp.		Seat Seal	Parker LUCIFER® Valves			Power		Coil Group	Dwg. No.
	1	(2)	1	(2)	1	(2)	Min	Max (MOPD)		Min	Max		Valve Ref.	Housing Ref.	Coil Ref.				
BSP	mm		Kv l/min		KV m³/h		bar	AC bar	DC bar	°C	°C					AC W	DC W		
1/4"	3	3	4.5	4.5	0.27	0.27	0	2	2	-10	75	FKM	133T2101 [1]	2995	481865	8	9	2.1	3223
	3	3	4.5	4.5	0.27	0.27	0	2	2	-10	75	FKM	133T2101 [1]	4270	481000	8	8	2.1	3223

Notes:

1. With manual override

BRASS
PIPE MOUNTING
CONTROL BY ELECTRIC IMPULSE

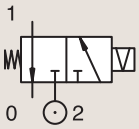

Port size	Orifice Ø		Flow factors				Operating Pressure Differential			Fluid Temp.		Seat Seal	Parker LUCIFER® Valves			Power		Coil Group	Dwg. No.
	1	(2)	1	(2)	1	(2)	Min	Max (MOPD)		Min	Max		Valve Ref.	Housing Ref.	Coil Ref.				
BSP	mm		Kv l/min		KV l/min		bar	AC bar	DC bar	°C	°C					AC W	DC W		
1/4"	1.5	1.5	1.5	1.5	0.09	0.09	0	-	16	-10	100	FKM	135K04	4269	485400	-	13	4.0	8104

For this page	Port size	Orifice (mm)	Kv (l/min)	MOPD (bar)	Fluid Temp (°C)	Amb Temp (°C)
From	1/4"	1.5	1.5	2	-10	-10
To	1/4"	3	4.5	16	100	50

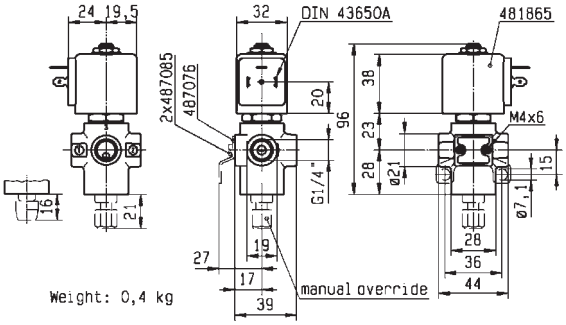

Drawing 3223

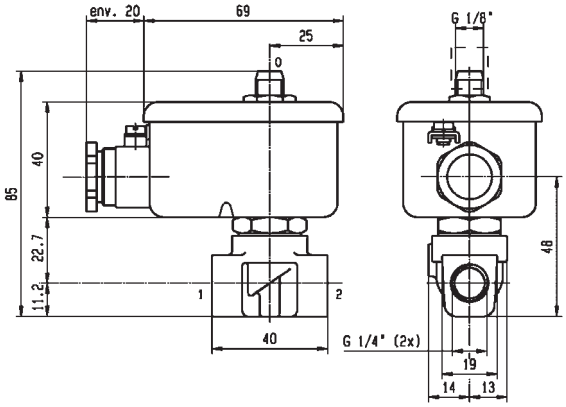

Drawing 8104

3/2 VALVES FOR DRY OR LUBRICATED AIR, NEUTRAL GASES AND LIQUIDS

DIRECT OPERATED

BRASS

SUB-BASE MOUNTING

NORMALLY CLOSED

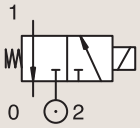

Port size	Orifice Ø		Flow factors				Operating Pressure Differential			Fluid Temp.		Seat Seal	Parker Valves			Power		Coil Group	Dwg. No.
	1	(2)	1	(2)	1	(2)	Min	Max(MOPD)		Min	Max		Valve Order Number	Valve Type	Coil Type	AC W	DC W		
	mm		Kv l/min		KV l/min		bar	AC bar	DC bar	°C	°C								
SB	1.3	2.5	1	-	0.06	-	0	20	10	-30	140	Ruby	**360490J** [1]	**PM128GR**	**ZB09**	9	-	20.1/20.2	009
	1.3	2.5	1	-	0.06	-	0	20	10	-30	140	Ruby	**360480J** [1]	**PM128IR**	**YB09**	9	-	20.1/20.2	010
	1.3	2.5	1	-	0.06	-	0	20	10	-30	140	Ruby	**360480J** [1]	**PM128IR**	**ZB09**	9	-	20.1/20.2	010
	1.3	2.5	1	-	0.06	-	0	20	10	-10	140	FKM	**360506** [1]	**PM128ISV**	**ZB09**	9	-	20.1/20.2	010
	1.3	2.5	1	-	0.06	-	0	20	10	-10	140	FKM	**360479J** [1]	**PM128IV**	**ZB09**	9	-	20.1/20.2	010

Notes:

1. Maximum static pressure: 14.5 Bar (for Viton sealing, maximum static pressure: 12 Bar)

For this page	Port size	Orifice (mm)	Kv (l/min)	MOPD (bar)	Fluid Temp (°C)	Amb Temp (°C)
From	SB	1.3	1	10	-30	-10
To	SB	1.3	1	20	140	50

Drawing 009

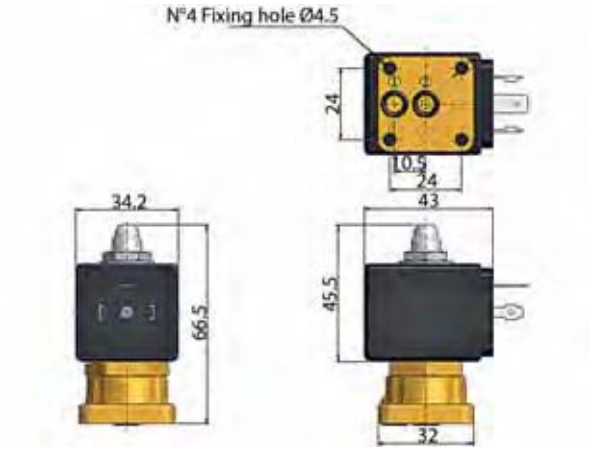

Drawing 010

3/2 VALVES FOR DRY OR LUBRICATED AIR, NEUTRAL GASES AND LIQUIDS

DIRECT OPERATED

BRASS

SUB-BASE MOUNTING

NORMALLY CLOSED

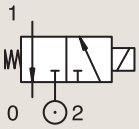

Port size	Orifice Ø 1 mm	Orifice Ø (2) mm	Flow factors 1 Kv l/min	Flow factors (2) Kv l/min	Flow factors 1 KV l/min	Flow factors (2) KV l/min	Operating Pressure Differential Min bar	Max (MOPD) AC bar	Max (MOPD) DC bar	Fluid Temp. Min °C	Fluid Temp. Max °C	Seat Seal	Parker LUCIFER® Valves Valve Ref.	Housing Ref.	Coil Ref.	IS	Power AC W	Power DC W	Coil Group	Dwg. No.
SB	1.2	1.5	0.7	0.9	0.04	0.05	0	10	10	-10	75	FKM	**131M75**	**8993**	**488980**		2	2.5	1.1	3383
	1.2	1.5	0.7	0.9	0.04	0.05	0	10	10	-10	75	FKM	**131M7550** [1]	**8993**	**488980**		2	2.5	1.1	3383
	1.5	1.5	0.9	0.9	0.05	0.05	0	7	7	-10	75	FKM	**131M74**	**8993**	**488980**		2	2.5	1.1	3383
	1.5	1.5	0.9	0.9	0.05	0.05	0	7	7	-10	75	FKM	**131M7450** [1]	**8993**	**488980**		2	2.5	1.1	3383
	1	1	0.6	0.6	0.03	0.03	0	-	10	-10	75	FKM	**131F4490**	**2995**	**483580.01**	*	-	0.5 to 3	7.0/8.0	7057
	1	1	0.6	0.6	0.03	0.03	0	-	10	-10	75	FKM	**131F4490**	**-**	**488660.01**	*	-	0.3 to 3	7.0/8.0	7057
	1	1	0.6	0.6	0.03	0.03	0	-	10	-10	75	FKM	**131F4490**	**-**	**495910**	*	-	0.3 to 3	7.0/8.0	7057
	1.5	2	1.5	2.2	0.09	0.13	0	-	16	-10	100	FKM	**131F4410**	**2995**	**481865**		-	9	2.1	3509
	1.5	1.5	1.5	1.5	0.09	0.09	0	-	7	-20	75	PUR	**131F4497**	**2995**	**482740**		-	1.6	6.0/8.0	8022
	1.5	1.5	1.5	1.5	0.09	0.09	0	7	7	-20	75	PUR	**131F4497**	**-**	**495900**		2.5	2	6.0/8.0	8022
	1.5	1.5	1.5	1.5	0.09	0.09	0	-	7	-20	75	PUR	**131F4497**	**-**	**495910**	*	-	0.3 to 3	6.0/8.0	8022
	1.5	1.5	1.5	1.5	0.09	0.09	0	-	7	-20	75	PUR	**131F4497**	**2995**	**496125**		-	1.6	6.0/8.0	8022

Notes:

1. With manual override

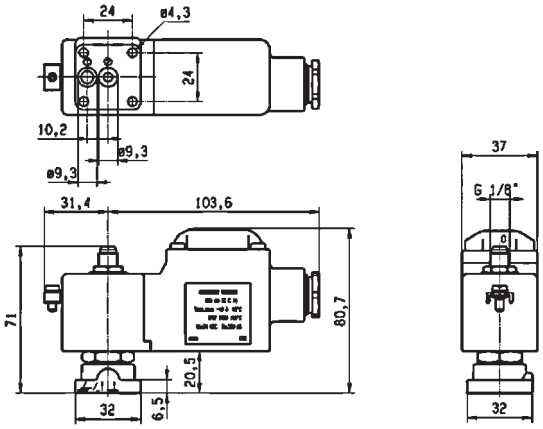

Drawing 8022

For this page	Port size	Orifice (mm)	Kv (l/min)	MOPD (bar)	Fluid Temp (°C)	Amb Temp (°C)
From	SB	1	0.6	7	-20	-20
To	SB	1.5	1.5	16	100	50

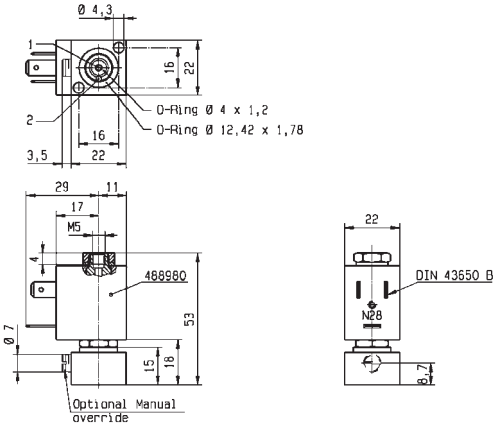

Drawing 3383

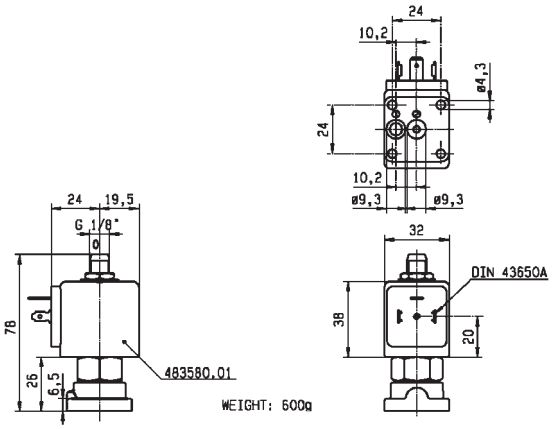

Drawing 7057

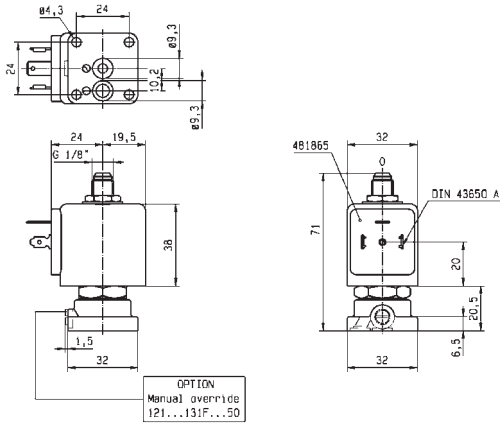

Drawing 3509

3/2 VALVES FOR DRY OR LUBRICATED AIR, NEUTRAL GASES AND LIQUIDS
DIRECT OPERATED

BRASS
SUB-BASE MOUNTING
NORMALLY CLOSED

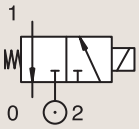

Port size	Orifice Ø 1 mm	Orifice Ø (2) mm	Flow factors 1 Kv l/min	Flow factors (2) Kv l/min	Flow factors 1 KV m³/h	Flow factors (2) KV m³/h	Operating Pressure Differential Min bar	Max (MOPD) AC bar	Max (MOPD) DC bar	Fluid Temp. Min °C	Fluid Temp. Max °C	Seat Seal	Parker LUCIFER® Valves Valve Ref.	Housing Ref.	Coil Ref.	Power AC W	Power DC W	Coil Group	Dwg. No.
SB	1.5	1.5	1.5	1.5	0.09	0.09	0	15	15	-10	100	FKM	E131F44	2995	481865	8	9	2.1	3509
	1.5	1.5	1.5	1.5	0.09	0.09	0	15	15	-10	120	FKM	E131F44	4270	481000	8	8	2.1	3509
	1.5	1.5	1.5	1.5	0.09	0.09	0	15	15	-10	100	FKM	E131F4450 [1]	2995	481865	8	9	2.1	3509
	1.5	1.5	1.5	1.5	0.09	0.09	0	15	15	-10	100	FKM	E131F4450 [1]	4270	481000	8	8	2.1	3509
	2	2.5	2.5	3.5	0.15	0.21	0	10	10	-10	100	FKM	131F46	2995	481865	8	9	2.1	3509
	2	2.5	2.5	3.5	0.15	0.21	0	10	10	-10	120	FKM	131F46	4270	481000	8	8	2.1	3509
	2	2.5	2.5	3.5	0.15	0.21	0	10	10	-10	100	FKM	131F4650 [1]	2995	481865	8	9	2.1	3509
	2	2.5	2.5	3.5	0.15	0.21	0	10	10	-10	120	FKM	131F4650 [1]	4270	481000	8	8	2.1	3509
	2.5	2.5	3.5	3.5	0.21	0.21	0	7	7	-10	100	FKM	E131F43	2995	481865	8	9	2.1	3509
	2.5	2.5	3.5	3.5	0.21	0.21	0	7	7	-10	120	FKM	E131F43	4270	481000	8	8	2.1	3509
	2.5	2.5	3.5	3.5	0.21	0.21	0	7	7	-10	100	FKM	E131F4350 [1]	2995	481865	8	9	2.0	3509
	2.5	2.5	3.5	3.5	0.21	0.21	0	7	7	-10	120	FKM	E131F4350 [1]	4270	481000	8	8	2.0	3509
	2.5	2.5	3.5	3.5	0.21	0.21	0	7	7	-10	100	FKM	E131F4350 [1]	4270	486265	14	14	2.0	3509

Notes:

1. With manual override

BRASS
SUB-BASE MOUNTING
NORMALLY OPEN

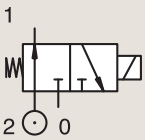

Port size	Orifice Ø 1 mm	Orifice Ø (2) mm	Flow factors 1 Kv l/min	Flow factors (2) Kv l/min	Flow factors 1 KV m³/h	Flow factors (2) KV m³/h	Operating Pressure Differential Min bar	Max (MOPD) AC bar	Max (MOPD) DC bar	Fluid Temp. Min °C	Fluid Temp. Max °C	Seat Seal	Parker LUCIFER® Valves Valve Ref.	Housing Ref.	Coil Ref.	Power AC W	Power DC W	Coil Group	Dwg. No.
SB	1.5	1.5	1.4	1.4	0.084	0.084	0	15	15	-10	75	FKM	132F44	4270	481000	8	8	2.1	3509
	1.5	1.5	1.4	1.4	0.084	0.084	0	15	15	-10	75	FKM	132F44	2995	481865	8	9	2.1	3509
	2	2	1.8	1.8	0.108	0.108	0	10	10	-10	120	FKM	132F46	4270	481000	8	8	2.1	3509
	2	2	1.8	1.8	0.108	0.108	0	10	10	-10	100	FKM	132F46	2995	481865	8	9	2.1	3509
	2.5	2.5	2.2	2.2	0.132	0.132	0	7	7	-10	75	FKM	132F43	4270	481000	8	8	2.0	3509
	2.5	2.5	2.2	2.2	0.132	0.132	0	7	7	-10	75	FKM	132F43	2995	481865	8	9	2.0	3509
	2.5	2.5	2.2	2.2	0.132	0.132	0	7	7	-10	75	FKM	132F43	4270	486265	14	14	2.0	3509

For this page	Port size	Orifice (mm)	Kv (l/min)	MOPD (bar)	Fluid Temp (°C)	Amb Temp (°C)
From	SB	1.5	1.4	7	-10	-30
To	SB	2.5	3.5	15	120	50

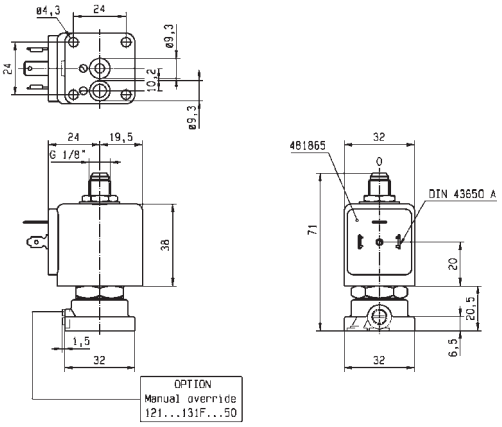

Drawing 3509

3/2 VALVES FOR DRY OR LUBRICATED AIR, NEUTRAL GASES AND LIQUIDS
DIRECT OPERATED

BRASS
SUB-BASE MOUNTING
UNIVERSAL

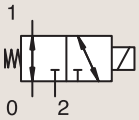

Port size	Orifice Ø 1 mm	Orifice Ø (2) mm	Flow factors 1 Kv l/min	Flow factors (2) Kv l/min	Flow factors 1 KV l/min	Flow factors (2) KV l/min	Operating Pressure Differential Min bar	Max (MOPD) AC bar	Max (MOPD) DC bar	Fluid Temp. Min °C	Fluid Temp. Max °C	Seat Seal	Parker LUCIFER® Valves Valve Ref.	Housing Ref.	Coil Ref.	Power AC W	Power DC W	Coil Group	Dwg. No.
SB	1.5	1.5	1.5	1.5	0.09	0.09	0	10	10	-10	100	FKM	**E133F4450** [1]	**4270**	**481000**	8	8	2.1	3509
	1.5	1.5	1.5	1.5	0.09	0.09	0	10	10	-10	120	FKM	**E133F4450** [1]	**2995**	**481865**	8	9	2.1	3509
	1.5	1.5	1.5	1.5	0.09	0.09	0	10	10	-10	120	FKM	**E133F44**	**4270**	**481000**	8	8	2.1	3509
	1.5	1.5	1.5	1.5	0.09	0.09	0	10	10	-10	100	FKM	**E133F44**	**2995**	**481865**	8	9	2.1	3509
	2	2	2.5	2.5	0.15	0.15	0	7	7	-10	120	FKM	**133F46**	**4270**	**481000**	8	8	2.1	3509
	2	2	2.5	2.5	0.15	0.15	0	7	7	-10	100	FKM	**133F46**	**2995**	**481865**	8	9	2.1	3509
	2.5	2.5	3.5	3.5	0.21	0.21	0	4	4	-10	120	FKM	**E133F43**	**4270**	**481000**	8	8	2.1	3509
	2.5	2.5	3.5	3.5	0.21	0.21	0	4	4	-10	100	FKM	**E133F43**	**2995**	**481865**	8	9	2.1	3509

Notes:

1. With manual override

For this page	Port size	Orifice (mm)	Kv (l/min)	MOPD (bar)	Fluid Temp (°C)	Amb Temp (°C)
From	SB	1.5	1.5	4	-10	-10
To	SB	2.5	3.5	10	120	50

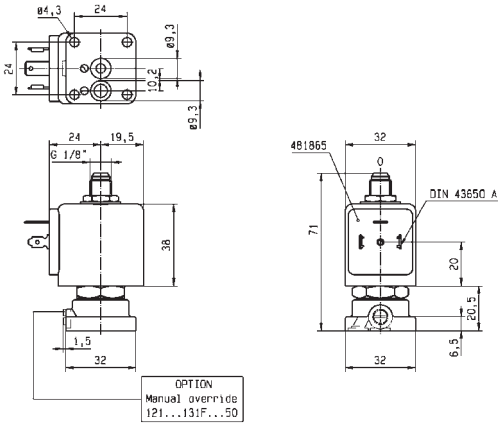

Drawing 3509

3/2 VALVES FOR DRY OR LUBRICATED AIR, NEUTRAL GASES AND LIQUIDS
DIRECT OPERATED

ANODIZED ALUMINIUM BANJO
NORMALLY CLOSED

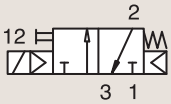

Port size BSP	Orifice Ø 1 mm	Flow factor Qn l/min	Operating Pressure Differential Min bar	Max (MOPD) AC bar	Max (MOPD) DC bar	Fluid Temp. Min °C	Fluid Temp. Max °C	Seat Seal	Parker LUCIFER® Valves: Valve Ref.	Housing Ref.	Coil Ref.	Power AC W	Power DC W	Coil Group	Dwg. No.
1/8"	1.2	50	0	10	10	-10	50	NBR	**131B14$_{12}$**	-	**496131**	3	3	1.2	8227
	1.2	50	0	10	10	-10	50	NBR	**131B14$_{12}$**	-	**496482**	3	3	1.2	8227
	1.2	50	0	10	10	-10	50	NBR	**131B14$_{12}$**	-	**496637**	3	3	1.2	8227

Notes:

1. Valve only compatible with air and neutral gases
2. With manual override

ANODIZED ALUMINIUM BANJO
NORMALLY CLOSED

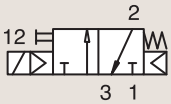

Port size BSP	Orifice Ø 1 mm	Flow factor Qn l/min	Operating Pressure Differential Min bar	Max (MOPD) AC bar	Max (MOPD) DC bar	Fluid Temp. Min °C	Fluid Temp. Max °C	Seat Seal	Parker LUCIFER® Valves: Valve Ref.	Housing Ref.	Coil Ref.	Power AC W	Power DC W	Coil Group	Dwg. No.
1/4"	1.2	50	0	10	10	-10	50	NBR	**131B04$_{12}$**	-	**496131**	3	3	1.2	8226
	1.2	50	0	10	10	-10	50	NBR	**131B04$_{12}$**	-	**496482**	3	3	1.2	8226
	1.2	50	0	10	10	-10	50	NBR	**131B04$_{12}$**	-	**496637**	3	3	1.2	8226

Notes:

1. Valve only compatible with air and neutral gases
2. With manual override

For this page	Port size	Orifice (mm)	Qn (l/min)	MOPD (bar)	Fluid Temp (°C)	Amb Temp (°C)
From	1/8"	1.2	50	10	-10	-10
To	1/8"	1.2	50	10	50	50

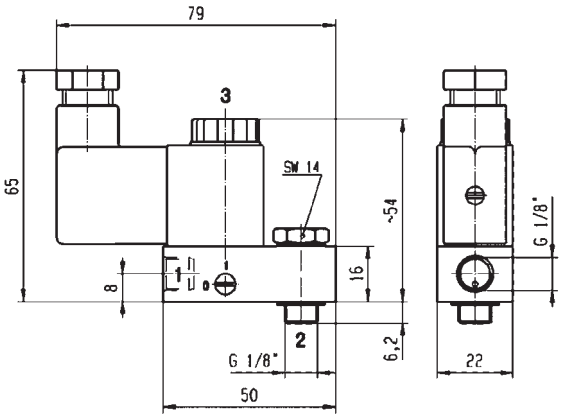

Drawing 8227

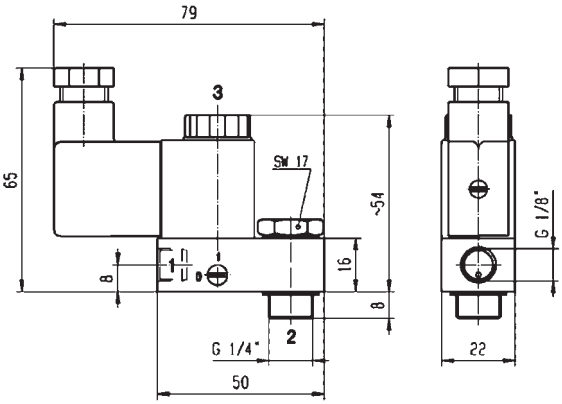

Drawing 8226

3/2 VALVES FOR DRY OR LUBRICATED AIR, NEUTRAL GASES AND LIQUIDS

DIRECT OPERATED

303 STAINLESS ST.

SUB-BASE MOUNTING

NORMALLY CLOSED

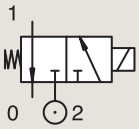

Port size	Orifice Ø		Flow factors				Operating Pressure Differential			Fluid Temp.		Seat Seal	Parker LUCIFER® Valves			Power		Coil Group	Dwg. No.
	1	(2)	1	(2)	1	(2)	Min	Max (MOPD)		Min	Max		Valve Ref.	Housing Ref.	Coil Ref.				
	mm		Kv l/min		KV l/min		bar	AC bar	DC bar	°C	°C					AC W	DC W		
SB	1.5	1.5	1.5	2.2	0.09	0.13	0	15	15	-10	100	NBR	**131F5406**	**2995**	**481865**	8	9	2.1	3509

For this page	Port size	Orifice (mm)	Kv (l/min)	MOPD (bar)	Fluid Temp (°C)	Amb Temp (°C)
From	SB	1.5	1.5	15	-10	-10
To	SB	1.5	1.5	15	100	50

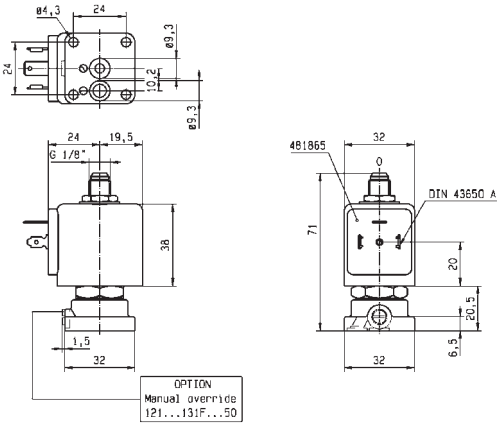

Drawing 3509

3/2 VALVES FOR DRY OR LUBRICATED AIR, NEUTRAL GASES AND LIQUIDS

DIRECT OPERATED

POM

SUB-BASE MOUNTING

NORMALLY CLOSED

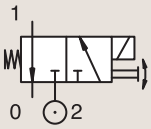

Port size	Orifice Ø 1 mm	Orifice Ø (2) mm	Flow factors 1 Kv l/min	Flow factors (2) Kv l/min	Flow factors 1 KV l/min	Flow factors (2) KV l/min	Operating Pressure Differential Min bar	Max (MOPD) AC bar	Max (MOPD) DC bar	Fluid Temp. Min °C	Fluid Temp. Max °C	Seat Seal	Parker LUCIFER® Valves Valve Ref.	Housing Ref.	Coil Ref.	Power AC W	Power DC W	Coil Group	Dwg. No.
SB	2	2	2	2	0.12	0.12	0	10	10	-10	50	FKM	E131F26 12	2995	481865	8	9	2.1/3.0	3601
	2	2	2	2	0.12	0.12	0	10	10	-10	50	FKM	E131F26 2	2995	482730	6	7	2.1/3.0	3601

Notes:

1. 20% Switch-on - max. 2 min
2. With manual override

For this page	Port size	Orifice (mm)	Kv (l/min)	MOPD (bar)	Fluid Temp (°C)	Amb Temp (°C)
From	SB	2	2	10	-10	-10
To	SB	2	2	10	50	50

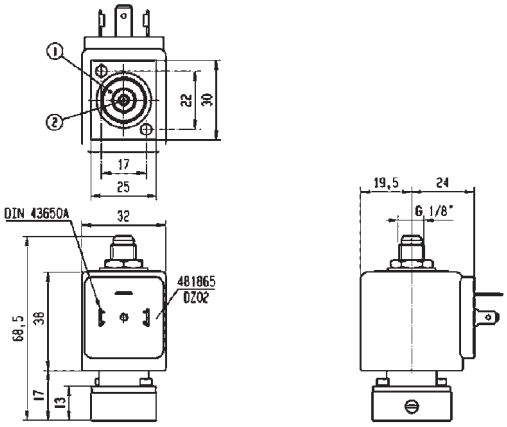

Drawing 3601

3/2 VALVES FOR DRY OR LUBRICATED AIR, NEUTRAL GASES AND LIQUIDS

PILOT OPERATED

Industrial Equipment

Process

ANODIZED ALUMINIUM PIPE MOUNTING

NORMALLY CLOSED

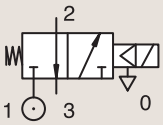

Port size	Orifice Ø		Flow factors				Operating Pressure Differential			Fluid Temp.		Seat Seal	Parker LUCIFER® Valves			IS	Power		Coil Group	Dwg. No.
	1	(2)	1	(2)	1	(2)	Min	Max (MOPD)		Min	Max									
BSP	mm		Kv l/min		KV l/min		bar	AC bar	DC bar	°C	°C		Valve Ref.	Housing Ref.	Coil Ref.		AC W	DC W		
1/4"	6.5	6.5	10	-	0.6	-	1	-	10	-10	55	NBR	**331B7490 [1]**	**2995**	**483580.01**	*	-	0.5 to 3	7.0/8.0	8270
	6.5	6.5	10	-	0.6	-	1	-	10	-10	75	NBR	**331B7490 [1]**	**-**	**488660.01**	*	-	0.3 to 3	7.0/8.0	8270
	6.5	6.5	10	-	0.6	-	1	-	10	-10	75	NBR	**331B7490 [1]**	**-**	**495910**	*	-	0.3 to 3	7.0/8.0	8270
	6.5	-	10	-	0.6	-	1	10	10	-10	75	NBR	**E331B74 [13]**	**2995**	**481865**		8	9	2.1	3240
	6.5	-	10	-	0.6	-	1	10	10	-10	75	NBR	**E331B74 [13]**	**4270**	**485100**		8	8	2.1	3240
	8	8	20	20	1.2	1.2	1	15	15	-10	75	FKM	**E331B01 [2]**	**4270**	**481000**		8	8	2.1	3234
	8	8	20	20	1.2	1.2	1	15	15	-10	75	FKM	**E331B01 [2]**	**2995**	**481865**		8	9	2.1	3234
	8	8	20	20	1.2	1.2	1	15	15	-10	75	FKM	**E331B01 [2]**	**-**	**483371**		8	8	2.1	3234

Notes:

1. Valve only compatible with air and neutral gases
2. Valve only compatible with hydraulic oil and air/neutral gases
3. With manual override

For this page	Port size	Orifice (mm)	Kv (l/min)	MOPD (bar)	Fluid Temp (°C)	Amb Temp (°C)
From	1/4"	6.5	10	10	-10	-10
To	1/4"	8	20	15	75	50

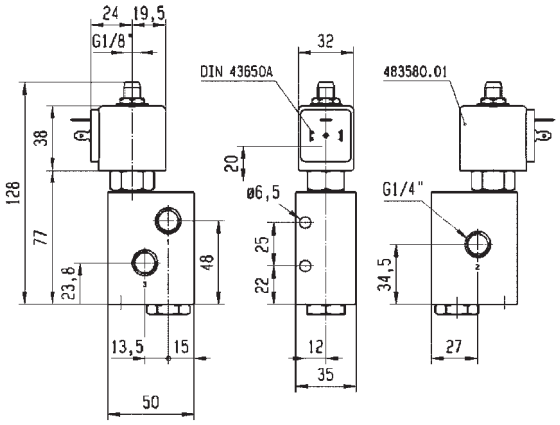

Drawing 8270

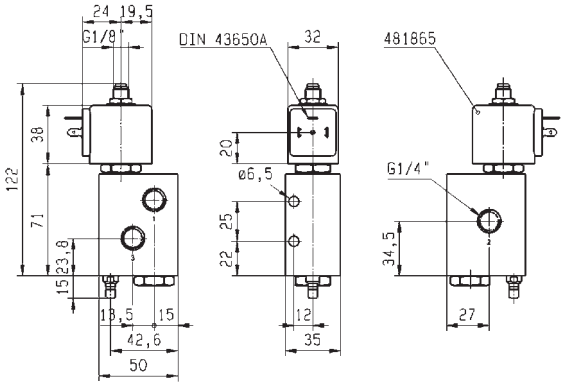

Weight: 0,51 kg

Drawing 3240

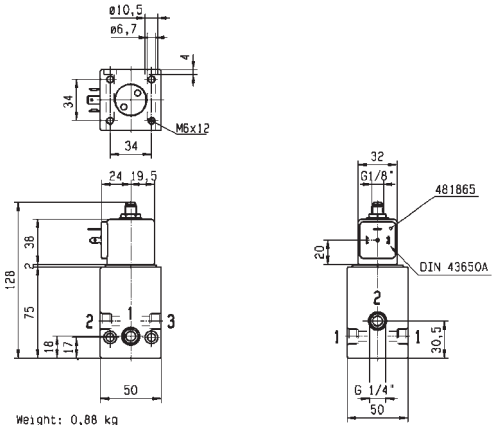

Weight: 0,88 kg

Drawing 3234

3/2 VALVES FOR DRY OR LUBRICATED AIR, NEUTRAL GASES AND LIQUIDS
PILOT OPERATED

ANODIZED ALUMINIUM PIPE MOUNTING
NORMALLY CLOSED

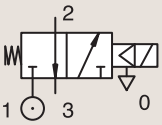

Port size BSP	Orifice Ø mm 1	Orifice Ø mm (2)	Flow factors Kv l/min 1	Flow factors Kv l/min (2)	Flow factors KV l/min 1	Flow factors KV l/min (2)	Operating Pressure Differential bar Min	Operating Pressure Differential bar Max (MOPD) AC bar	Operating Pressure Differential bar Max (MOPD) DC bar	Fluid Temp. °C Min	Fluid Temp. °C Max	Seat Seal	Parker LUCIFER® Valves Valve Ref.	Parker LUCIFER® Valves Housing Ref.	Parker LUCIFER® Valves Coil Ref.	Power AC W	Power DC W	Coil Group	Dwg. No.
1/2"	14	14	-	-	-	-	1	15	-	-10	75	FKM	E331B21 [1]	2995	482722	10	-	2.1	3238
	14	14	-	-	-	-	1	15	15	-10	75	FKM	E331B21 [1]	-	483371	8	8	2.1	3238

Notes:

1. Valve only compatible with air and neutral gases

ANODIZED ALUMINIUM PIPE MOUNTING
NORMALLY OPEN

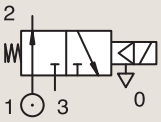

Port size BSP	Orifice Ø mm 1	Orifice Ø mm (2)	Flow factors Kv l/min 1	Flow factors Kv l/min (2)	Flow factors KV l/min 1	Flow factors KV l/min (2)	Operating Pressure Differential bar Min	Operating Pressure Differential bar Max (MOPD) AC bar	Operating Pressure Differential bar Max (MOPD) DC bar	Fluid Temp. °C Min	Fluid Temp. °C Max	Seat Seal	Parker LUCIFER® Valves Valve Ref.	Parker LUCIFER® Valves Housing Ref.	Parker LUCIFER® Valves Coil Ref.	Power AC W	Power DC W	Coil Group	Dwg. No.
1/4"	8	8	10	10	0.6	0.6	1	40	40	-10	75	PCTFE	332B02 [12]	2995	481865	8	9	2.1	8114
	8	8	10	10	0.6	0.6	1	40	40	-10	75	PCTFE	332B02 [12]	4270	481000	8	8	2.1	8114
	8	8	20	20	1.2	1.2	1	15	15	-10	75	FKM	E332B01 [2]	2995	481865	8	9	2.1	3234
	8	8	20	20	1.2	1.2	1	15	15	-10	75	FKM	E332B01 [2]	4270	481000	8	8	2.1	3234
	8	8	20	20	1.2	1.2	1	15	15	-10	75	FKM	E332B01 [2]	-	483371	8	8	2.1	3234

Notes:

1. Pilot seat discs in Kel-F (PCTFE); valve with pilot return pipe
2. Valve only compatible with hydraulic oil and air/neutral gases

For this page	Port size	Orifice (mm)	Kv (l/min)	MOPD (bar)	Fluid Temp (°C)	Amb Temp (°C)
From	1/4"	8	10	15	-10	-10
To	1/2"	14	20	40	75	50

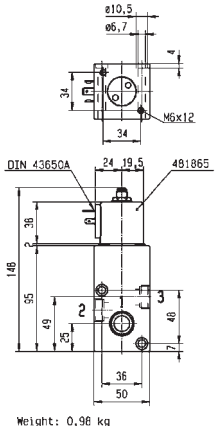

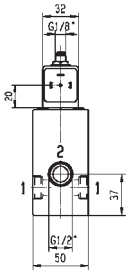

Drawing 3238

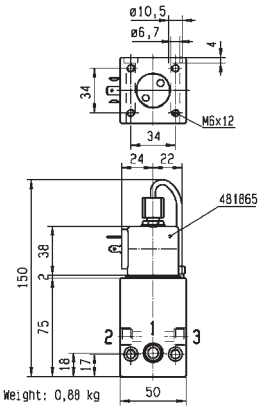

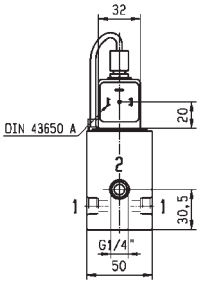

Drawing 8114

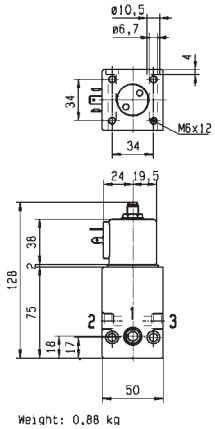

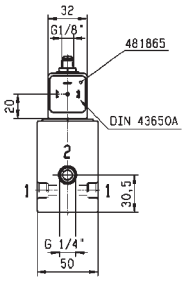

Drawing 3234

3/2 VALVES FOR DRY OR LUBRICATED AIR, NEUTRAL GASES AND LIQUIDS
PILOT OPERATED

ANODIZED ALUMINIUM PIPE MOUNTING
NORMALLY OPEN

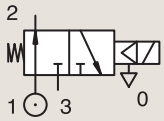

Port size	Orifice Ø		Flow factor	Operating Pressure Differential			Fluid Temp.		Seat Seal	Parker LUCIFER® Valves			Power		Coil Group	Dwg. No.
	1	(2)		Min	Max (MOPD)		Min	Max		Valve Ref.	Housing Ref.	Coil Ref.				
BSP	mm		Qn l/min	bar	AC bar	DC bar	°C	°C					AC W	DC W		
1/2"	14	14	2500	1	15	15	-10	100	FKM	E332B21 [1]	2995	481865	8	9	2.1	3238
	14	14	2500	1	15	15	-10	100	FKM	E332B21 [1]	4270	481000	8	8	2.1	3238

Notes:

1. Valve only compatible with air and neutral gases

ANODIZED ALUMINIUM SUB-BASE MOUNTING
NORMALLY CLOSED

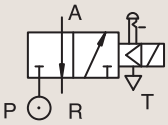

Port size	Orifice Ø	Flow factor	Operating Pressure Differential			Fluid Temp.		Seat Seal	Parker LUCIFER® Valves			Power		Coil Group	Dwg. No.
	1		Min	Max (MOPD)		Min	Max		Valve Ref.	Housing Ref.	Coil Ref.				
	mm	Qn l/min	bar	AC bar	DC bar	°C	°C					AC W	DC W		
SB	15	5000	0.5	10	10	-10	75	FKM	E331L21 [1]	2995	481865	8	9	2.1/3.0	3130
	15	5000	0.5	10	10	-10	75	FKM	E331L21 [1]	-	483371	8	8	2.1/3.0	3130

Notes:

1. With manual override

For this page	Port size	Orifice (mm)	Qn (l/min)	MOPD (bar)	Fluid Temp (°C)	Amb Temp (°C)
From	1/2"	14	-	10	-10	-10
To	1/2"	15	5000	15	100	50

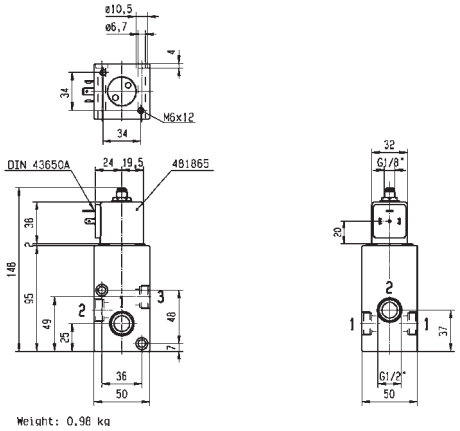

Drawing 3238

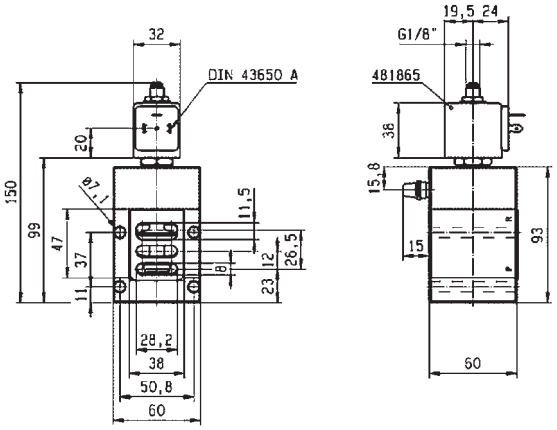

Drawing 3130

VALVES FOR HYDRAULIC OIL AND NEUTRAL LIQUIDS (UP TO 75 BAR)

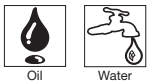

3/2

Actuation	Body	Function	Port Size	Orifice (mm)	Flow Factor Kv(l/min)	MOPD (bar)	Max Fluid Temp. (°C)	Page Parker Valves	Page Parker LUCIFER® Valves
Pilot Operated	Anodized aluminium/ Pipe mounting	Normally Closed	1/4''	8	10	40	75	-	248

3/2 VALVES FOR HYDRAULIC OIL AND NEUTRAL LIQUIDS (UP TO 75 BAR)

PILOT OPERATED

Process

Industrial Equipment

ANODIZED ALUMINIUM PIPE MOUNTING

NORMALLY CLOSED

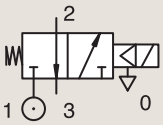

Port size	Orifice Ø		Flow factors				Operating Pressure Differential			Fluid Temp.		Seat Seal	Parker LUCIFER® Valves			Power		Coil Group	Dwg. No.
	1	(2)	1	(2)	1	(2)	Min	Max (MOPD)		Min	Max		Valve Ref.	Housing Ref.	Coil Ref.				
BSP	mm		Kv l/min		KV m^3/h		bar	AC bar	DC bar	°C	°C					AC W	DC W		
1/4"	8	8	10	10	0.6	0.6	1	40	40	-10	75	NBR	**331B02 12**	**2995**	**481865**	8	9	2.1	8114
	8	8	10	10	0.6	0.6	1	40	40	-10	75	NBR	**331B02 12**	**4270**	**481000**	8	8	2.1	8114
	8	8	10	10	0.6	0.6	1	40	40	-10	75	NBR	**331B0216 13**	**2995**	**481865**	8	9	2.1	8114
	8	8	10	10	0.6	0.6	1	40	40	-10	75	NBR	**331B0216 13**	**4270**	**481000**	8	8	2.1	8114

Notes:

1. Pilot seat discs in Kel-F (PCTFE); valve with pilot return pipe
2. Valve only compatible with hydraulic oil
3. Valve only compatible with air / neutral gases

For this page	Port size	Orifice (mm)	Kv (l/min)	MOPD (bar)	Fluid Temp (°C)	Amb Temp (°C)
From	1/4"	8	10	40	-10	-10
To	1/4"	8	10	40	75	50

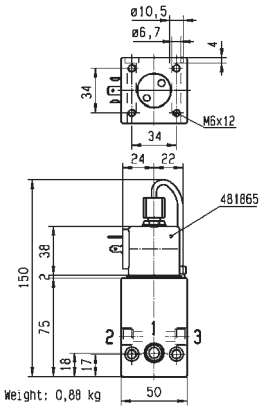

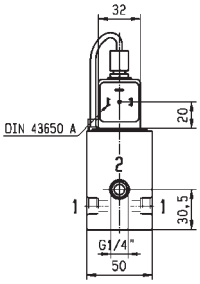

Drawing 8114

HIGH CORROSION RESISTANT VALVES (303 STAINLESS STEEL)

3/2

Actuation	Body	Function	Port Size	Orifice (mm)	Flow Factor Kv(l/min)	MOPD (bar)	Max Fluid Temp. (°C)	Page Parker Valves	Page Parker LUCIFER® Valves
Direct Operated	303 Stainless St./Pipe mounting	Normally Closed	1/4''	1 to 2.5	3.5	15	180	-	252
			1/4''	1 to 2.5	3.5	15	180	-	252
		Universal	1/4''	1.5 to 2.5	3.5	10	180	-	254

3/2 HIGH CORROSION RESISTANT VALVES (303 STAINLESS STEEL)

DIRECT OPERATED

303 STAINLESS ST. PIPE MOUNTING

NORMALLY CLOSED

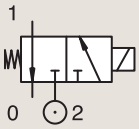

Port size	Orifice Ø		Flow factors				Operating Pressure Differential			Fluid Temp.		Seat Seal	Parker LUCIFER® Valves			IS	Power		Coil Group	Dwg. No.
	1	(2)	1	(2)	1	(2)	Min	Max (MOPD)		Min	Max		Valve Ref.	Housing Ref.	Coil Ref.		AC	DC		
BSP	mm		Kv l/min		KV m³/h		bar	AC bar	DC bar	°C	°C						W	W		
1/4"	1	1	0.6	0.6	0.03	0.03	0	-	10	-10	55	FKM	131V5490	2995	483580.01	*	-	0.5 to 3	7.0/8.0	6740
	1	1	0.6	0.6	0.03	0.03	0	-	10	-10	75	FKM	131V5490	-	488660.01	*	-	0.3 to 3	7.0/8.0	6740
	1	1	0.6	0.6	0.03	0.03	0	-	10	-10	75	FKM	131V5490	-	495910	*	-	0.3 to 3	7.0/8.0	6740
	1.5	1.5	1.5	1.5	0.09	0.09	0	15	15	-10	120	FKM	131V5406	4270	481000		8	8	2.1	8116
	1.5	1.5	1.5	1.5	0.09	0.09	0	15	15	-10	100	FKM	131V5406	2995	481865		8	9	2.1	8116
	1.5	1.5	1.5	1.5	0.09	0.09	0	15	15	0	130	Ruby	131V5463 [1]	4270	481000		8	8	2.0	8116
	1.5	1.5	1.5	1.5	0.09	0.09	0	15	15	0	100	Ruby	131V5463 [1]	2995	481865		8	9	2.0	8116
	1.5	1.5	1.5	1.5	0.09	0.09	0	15	15	0	180	Ruby	131V5463 [1]	4270	486265		14	14	2.0	8116
	1.5	1.5	1.5	1.5	0.09	0.09	0	-	7	-20	75	PUR	131V5497	2995	482740		-	1.6	3.0/6.0/8.0	8024
	1.5	1.5	1.5	1.5	0.09	0.09	0	7	7	-20	75	PUR	131V5497	-	495900		2.5	2	3.0/6.0/8.0	8024
	1.5	1.5	1.5	1.5	0.09	0.09	0	-	7	-20	75	PUR	131V5497	-	495910	*	-	0.3 to 3	3.0/6.0/8.0	8024
	1.5	1.5	1.5	1.5	0.09	0.09	0	-	7	-20	75	PUR	131V5497	2995	496125		-	1.6	3.0/6.0/8.0	8024
	2.5	2.5	3.5	3.5	0.21	0.21	0	7	7	-10	120	FKM	131V5306	4270	481000		8	8	2.1	8116
	2.5	2.5	3.5	3.5	0.21	0.21	0	7	7	-10	100	FKM	131V5306	2995	481865		8	9	2.1	8116
	2.5	2.5	3.5	3.5	0.21	0.21	0	7	7	-30	130	Ruby	131V5363 [1]	4270	481000		8	8	2.0	8116
	2.5	2.5	3.5	3.5	0.21	0.21	0	7	7	-30	100	Ruby	131V5363 [1]	2995	481865		8	9	2.0	8116
	2.5	2.5	3.5	3.5	0.21	0.21	0	7	7	-30	180	Ruby	131V5363 [1]	4270	486265		14	14	2.0	8116
	2.5	2.5	3	3	0.18	0.18	0	-	2	-20	75	PUR	131V5397	2995	482740		-	1.6	6.0/8.0	8024
	2.5	2.5	3	3	0.18	0.18	0	2	2	-20	75	PUR	131V5397	-	495900		2.5	2	6.0/8.0	8024
	2.5	2.5	3	3	0.18	0.18	0	-	2	-20	75	PUR	131V5397	-	495910	*	-	0.3 to 3	6.0/8.0	8024
	2.5	2.5	3	3	0.18	0.18	0	-	2	-20	75	PUR	131V5397	2995	496125		-	1.6	6.0/8.0	8024

Notes:

1. Valve only compatible with hydraulic oil and neutral liquids

For this page	Port size	Orifice (mm)	Kv (l/min)	MOPD (bar)	Fluid Temp (°C)	Amb Temp (°C)
From	1/4"	1	0.6	2	-30	-20
To	1/4"	2.5	3.5	15	180	50

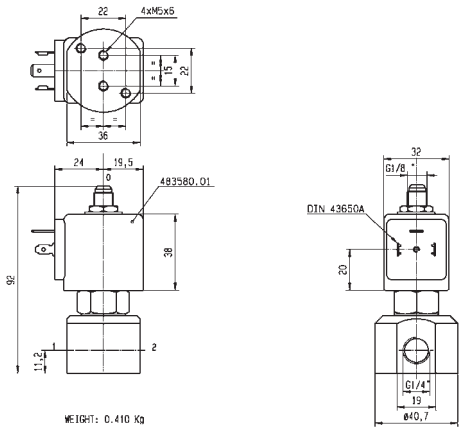

Drawing 6740

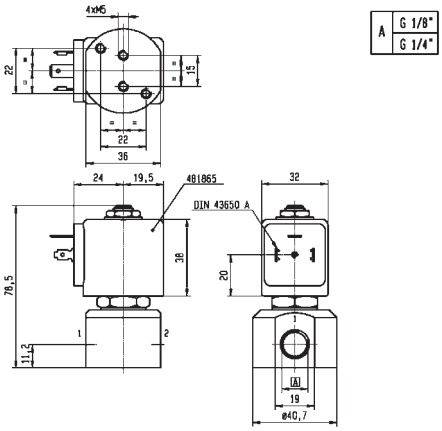

Drawing 8116

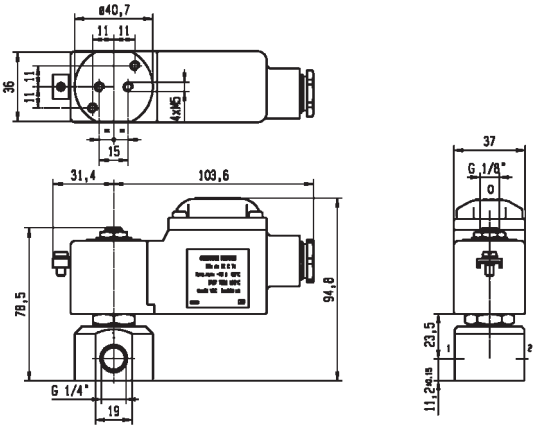

Drawing 8024

3/2 HIGH CORROSION RESISTANT VALVES (303 STAINLESS STEEL)

DIRECT OPERATED

303 STAINLESS ST. PIPE MOUNTING

UNIVERSAL

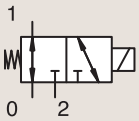

Port size	Orifice Ø		Flow factors				Operating Pressure Differential			Fluid Temp.		Seat Seal	Parker LUCIFER® Valves			Power		Coil Group	Dwg. No.
	1	(2)	1	(2)	1	(2)	Min	Max (MOPD)		Min	Max		Valve Ref.	Housing Ref.	Coil Ref.				
BSP	mm		Kv l/min		KV m³/h		bar	AC bar	DC bar	°C	°C					AC W	DC W		
1/4"	1.5	1.5	1.5	1.5	0.09	0.09	0	10	10	-10	120	FKM	**133V5406**	**4270**	**481000**	8	8	2.1	8116
	1.5	1.5	1.5	1.5	0.09	0.09	0	10	10	-10	100	FKM	**133V5406**	**2995**	**481865**	8	9	2.1	8116
	1.5	1.5	1.5	1.5	0.09	0.09	0	10	10	0	130	Ruby	**133V5463**[1]	**4270**	**481000**	8	8	2.0	8116
	1.5	1.5	1.5	1.5	0.09	0.09	0	4	4	0	100	Ruby	**133V5463**[1]	**2995**	**481865**	8	9	2.0	8116
	1.5	1.5	1.5	1.5	0.09	0.09	0	10	10	0	180	Ruby	**133V5463**[1]	**4270**	**486265**	14	14	2.0	8116
	2.5	2.5	3.5	3.5	0.21	0.21	0	4	4	-10	120	FKM	**133V5306**	**4270**	**481000**	8	8	2.1	8116
	2.5	2.5	3.5	3.5	0.21	0.21	0	4	4	-10	100	FKM	**133V5306**	**2995**	**481865**	8	9	2.1	8116
	2.5	2.5	3.5	3.5	0.21	0.21	0	4	4	0	130	Ruby	**133V5363**[1]	**4270**	**481000**	8	8	2.0	8116
	2.5	2.5	3.5	3.5	0.21	0.21	0	4	4	0	100	Ruby	**133V5363**[1]	**2995**	**481865**	8	9	2.0	8116
	2.5	2.5	3.5	3.5	0.21	0.21	0	4	4	0	180	Ruby	**133V5363**[1]	**4270**	**486265**	14	14	2.0	8116

Notes:

1. Valve only compatible with hydraulic oil and neutral liquids

For this page	Port size	Orifice (mm)	Kv (l/min)	MOPD (bar)	Fluid Temp (°C)	Amb Temp (°C)
From	1/4''	1.5	1.5	4	-10	-10
To	1/4''	2.5	3.5	3.5	180	50

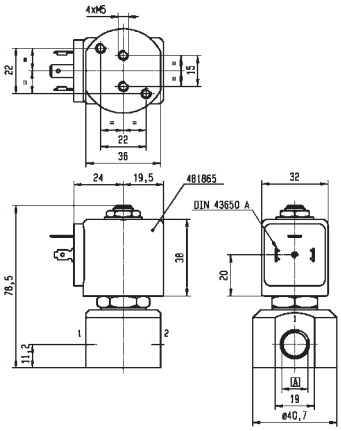

A	G 1/8"
	G 1/4"

Drawing 8116

VALVES FOR BEVERAGE DISPENSING - LIQUIPURE®

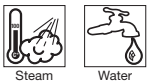

3/2

Actuation	Body	Function	Port Size	Orifice (mm)	Flow Factor Kv(l/min)	MOPD (bar)	Max Fluid Temp. (°C)	Page Parker Valves
Direct Operated	Stainless St./Sub-base mounting	Normally Closed	SB	1.5 to 3	4.2	14	140	258

3/2 VALVES FOR BEVERAGE DISPENSING - LIQUIPURE®

DIRECT OPERATED

Beverage Dispensing

Medical / Instrumentation

STAINLESS ST. SUB-BASE MOUNTING

NORMALLY CLOSED

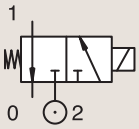

Port size	Orifice Ø		Flow factors				Operating Pressure Differential			Fluid Temp.		Seat Seal	Parker Valves			Power		Coil Group	Dwg. No.
	1	(2)	1	(2)	1	(2)	Min	Max (MOPD)		Min	Max		Valve Ref.	Housing Ref.	Coil Ref.				
BSP	mm		Kv l/min		KV m³/h		bar	AC bar	DC bar	°C	°C					AC W	DC W		
SB	1.5	2.5	1.3	-	0.08	-	0	14	14	-10	140	Ruby	3019F1GRG7	-	D4	13	16	24.0	072
	1.5	2.5	1.3	-	0.08	-	0	14	14	-10	140	Ruby	3019F1GRG7	-	D5	8	9	24.0	072
	1.5	2.5	1.3	-	0.08	-	0	14	14	-10	140	Ruby	3019F1GRG7	-	LA	9	9	24.0	072
	1.5	2.5	1.3	-	0.08	-	0	14	14	-10	140	Ruby	3019F1GRG7	-	LB-LC	13	16	24.0	072
	1.5	2.5	1.3	-	0.08	-	0	14	-	-10	140	Ruby	3019F1GRG7	-	XS03	9	-	24.0	072
	1.5	2.5	1.3	-	0.08	-	0	14	14	-10	140	FDA FKM	3019F1GVG7	-	D4	13	16	24.0	072
	1.5	2.5	1.3	-	0.08	-	0	14	14	-10	140	FDA FKM	3019F1GVG7	-	D5	8	9	24.0	072
	1.5	2.5	1.3	-	0.08	-	0	14	14	-10	140	FDA FKM	3019F1GVG7	-	LA	9	9	24.0	072
	1.5	2.5	1.3	-	0.08	-	0	14	14	-10	140	FDA FKM	3019F1GVG7	-	LB-LC	13	16	24.0	072
	1.5	2.5	1.3	-	0.08	-	0	14	-	-10	140	FDA FKM	3019F1GVG7	-	XS03	9	-	24.0	072
	1.5	2.5	1.3	-	0.08	-	0	14	14	-10	140	Ruby	301XGFRTG7	-	D4	13	16	24.0	073
	1.5	2.5	1.3	-	0.08	-	0	14	14	-10	140	Ruby	301XGFRTG7	-	D5	8	9	24.0	073
	1.5	2.5	1.3	-	0.08	-	0	14	14	-10	140	Ruby	301XGFRTG7	-	LA	9	9	24.0	073
	1.5	2.5	1.3	-	0.08	-	0	14	14	-10	140	Ruby	301XGFRTG7	-	LB-LC	13	16	24.0	073
	1.5	2.5	1.3	-	0.08	-	0	14	-	-10	140	Ruby	301XGFRTG7	-	XS03	9	-	24.0	073
	1.5	2.5	1.3	-	0.08	-	0	14	14	-10	140	FDA FKM	301XGFVTG7	-	D4	13	16	24.0	073
	1.5	2.5	1.3	-	0.08	-	0	14	14	-10	140	FDA FKM	301XGFVTG7	-	D5	8	9	24.0	073
	1.5	2.5	1.3	-	0.08	-	0	14	14	-10	140	FDA FKM	301XGFVTG7	-	LA	9	9	24.0	073
	1.5	2.5	1.3	-	0.08	-	0	14	14	-10	140	FDA FKM	301XGFVTG7	-	LB-LC	13	16	24.0	073
	1.5	2.5	1.3	-	0.08	-	0	14	-	-10	140	FDA FKM	301XGFVTG7	-	XS03	9	-	24.0	073
	2	2.5	2.2	-	0.13	-	0	10	10	-10	140	Ruby	3019F1JRG7	-	D4	13	16	24.0	072
	2	2.5	2.2	-	0.13	-	0	10	10	-10	140	Ruby	3019F1JRG7	-	D5	8	9	24.0	072
	2	2.5	2.2	-	0.13	-	0	10	10	-10	140	Ruby	3019F1JRG7	-	LA	9	9	24.0	072
	2	2.5	2.2	-	0.13	-	0	10	10	-10	140	Ruby	3019F1JRG7	-	LB-LC	13	16	24.0	072

For this page	Port size	Orifice (mm)	Kv (l/min)	MOPD (bar)	Fluid Temp (°C)	Amb Temp (°C)
From	SB	1.5	1.3	10	-10	-10
To	SB	2	2.2	14	140	50

Drawing 072

Drawing 073

3/2 VALVES FOR BEVERAGE DISPENSING - LIQUIPURE®

DIRECT OPERATED

STAINLESS ST. SUB-BASE MOUNTING

NORMALLY CLOSED

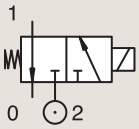

Port size	Orifice Ø		Flow factors				Operating Pressure Differential			Fluid Temp.		Seat Seal	Parker Valves			Power		Coil Group	Dwg. No.
	1	(2)	1	(2)	1	(2)	Min	Max (MOPD)		Min	Max		Valve Ref.	Housing Ref.	Coil Ref.				
BSP	mm		Kv l/min		KV m³/h		bar	AC bar	DC bar	°C	°C					AC W	DC W		
SB	2	2.5	2.2	-	0.13	-	0	10	-	-10	140	Ruby	3019F1JRG7	-	XS03	9	-	24.0	072
	2	2.5	2.2	-	0.13	-	0	10	10	-10	140	FDA FKM	3019F1JVG7	-	D4	13	16	24.0	072
	2	2.5	2.2	-	0.13	-	0	10	10	-10	140	FDA FKM	3019F1JVG7	-	D5	8	9	24.0	072
	2	2.5	2.2	-	0.13	-	0	10	10	-10	140	FDA FKM	3019F1JVG7	-	LA	9	9	24.0	072
	2	2.5	2.2	-	0.13	-	0	10	10	-10	140	FDA FKM	3019F1JVG7	-	LB-LC	13	16	24.0	072
	2	2.5	2.2	-	0.13	-	0	10	-	-10	140	FDA FKM	3019F1JVG7	-	XS03	9	-	24.0	072
	2	2.5	2.2	-	0.13	-	0	10	10	-10	140	Ruby	301XGFRTJ7	-	D4	13	16	24.0	073
	2	2.5	2.2	-	0.13	-	0	10	10	-10	140	Ruby	301XGFRTJ7	-	D5	8	9	24.0	073
	2	2.5	2.2	-	0.13	-	0	10	10	-10	140	Ruby	301XGFRTJ7	-	LA	9	9	24.0	073
	2	2.5	2.2	-	0.13	-	0	10	10	-10	140	Ruby	301XGFRTJ7	-	LB-LC	13	16	24.0	073
	2	2.5	2.2	-	0.13	-	0	10	-	-10	140	Ruby	301XGFRTJ7	-	XS03	9	-	24.0	073
	2	2.5	2.2	-	0.13	-	0	10	10	-10	140	FDA FKM	301XGFVTJ7	-	D4	13	16	24.0	073
	2	2.5	2.2	-	0.13	-	0	10	10	-10	140	FDA FKM	301XGFVTJ7	-	D5	8	9	24.0	073
	2	2.5	2.2	-	0.13	-	0	10	10	-10	140	FDA FKM	301XGFVTJ7	-	LA	9	9	24.0	073
	2	2.5	2.2	-	0.13	-	0	10	10	-10	140	FDA FKM	301XGFVTJ7	-	LB-LC	13	16	24.0	073
	2	2.5	2.2	-	0.13	-	0	10	-	-10	140	FDA FKM	301XGFVTJ7	-	XS03	9	-	24.0	073
	2.5	2.5	2.8	-	0.17	-	0	6.5	6.5	-10	140	Ruby	3019F1LRG7	-	D4	13	16	24.0	072
	2.5	2.5	2.8	-	0.17	-	0	6.5	6.5	-10	140	Ruby	3019F1LRG7	-	D5	8	9	24.0	072
	2.5	2.5	2.8	-	0.17	-	0	6.5	6.5	-10	140	Ruby	3019F1LRG7	-	LA	9	9	24.0	072
	2.5	2.5	2.8	-	0.17	-	0	6.5	6.5	-10	140	Ruby	3019F1LRG7	-	LB-LC	13	16	24.0	072
	2.5	2.5	2.8	-	0.17	-	0	6.5	-	-10	140	Ruby	3019F1LRG7	-	XS03	9	-	24.0	072
	2.5	2.5	2.8	-	0.17	-	0	6.5	6.5	-10	140	FDA FKM	3019F1LVG7	-	D4	13	16	24.0	072
	2.5	2.5	2.8	-	0.17	-	0	6.5	6.5	-10	140	FDA FKM	3019F1LVG7	-	D5	8	9	24.0	072
	2.5	2.5	2.8	-	0.17	-	0	6.5	6.5	-10	140	FDA FKM	3019F1LVG7	-	LA	9	9	24.0	072
	2.5	2.5	2.8	-	0.17	-	0	6.5	6.5	-10	140	FDA FKM	3019F1LVG7	-	LB-LC	13	16	24.0	072
	2.5	2.5	2.8	-	0.17	-	0	6.5	-	-10	140	FDA FKM	3019F1LVG7	-	XS03	9	-	24.0	072
	2.5	2.5	2.8	-	0.17	-	0	6.5	6.5	-10	140	Ruby	301XGFRTL7	-	D4	13	16	24.0	073
	2.5	2.5	2.8	-	0.17	-	0	6.5	6.5	-10	140	Ruby	301XGFRTL7	-	D5	8	9	24.0	073
	2.5	2.5	2.8	-	0.17	-	0	6.5	6.5	-10	140	Ruby	301XGFRTL7	-	LA	9	9	24.0	073
	2.5	2.5	2.8	-	0.17	-	0	6.5	6.5	-10	140	Ruby	301XGFRTL7	-	LB-LC	13	16	24.0	073
	2.5	2.5	2.8	-	0.17	-	0	6.5	-	-10	140	Ruby	301XGFRTL7	-	XS03	9	-	24.0	073
	2.5	2.5	2.8	-	0.17	-	0	6.5	6.5	-10	140	FDA FKM	301XGFVTL7	-	D4	13	16	24.0	073
	2.5	2.5	2.8	-	0.17	-	0	6.5	6.5	-10	140	FDA FKM	301XGFVTL7	-	D5	8	9	24.0	073
	2.5	2.5	2.8	-	0.17	-	0	6.5	6.5	-10	140	FDA FKM	301XGFVTL7	-	LA	9	9	24.0	073
	2.5	2.5	2.8	-	0.17	-	0	6.5	6.5	-10	140	FDA FKM	301XGFVTL7	-	LB-LC	13	16	24.0	073

For this page	Port size	Orifice (mm)	Kv (l/min)	MOPD (bar)	Fluid Temp (°C)	Amb Temp (°C)
From	SB	2	2.2	6.5	-10	-10
To	SB	2.5	2.8	10	140	50

Drawing 072

Drawing 073

3/2 VALVES FOR BEVERAGE DISPENSING - LIQUIPURE®

DIRECT OPERATED

STAINLESS ST. SUB-BASE MOUNTING

NORMALLY CLOSED

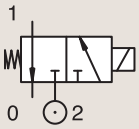

Port size	Orifice Ø		Flow factors				Operating Pressure Differential			Fluid Temp.		Seat Seal	Parker Valves			Power		Coil Group	Dwg. No.
	1	(2)	1	(2)	1	(2)	Min	Max (MOPD)		Min	Max		Valve Ref.	Housing Ref.	Coil Ref.	AC W	DC W		
BSP	mm		Kv l/min		KV m³/h		bar	AC bar	DC bar	°C	°C								
SB	2.5	2.5	2.8	-	0.17	-	0	6.5	-	-10	140	FDA FKM	**301XGFVTL7**	**-**	**XS03**	9	-	24.0	073
	3	2.5	3.3	-	0.2	-	0	4	4	-10	140	Ruby	**3019F1NRG7**	**-**	**D4**	13	16	24.0	072
	3	2.5	3.3	-	0.2	-	0	4	4	-10	140	Ruby	**3019F1NRG7**	**-**	**D5**	8	9	24.0	072
	3	2.5	3.3	-	0.2	-	0	4	4	-10	140	Ruby	**3019F1NRG7**	**-**	**LA**	9	9	24.0	072
	3	2.5	3.3	-	0.2	-	0	4	4	-10	140	Ruby	**3019F1NRG7**	**-**	**LB-LC**	13	16	24.0	072
	3	2.5	3.3	-	0.2	-	0	4	-	-10	140	Ruby	**3019F1NRG7**	**-**	**XS03**	9	-	24.0	072
	3	2.5	3.3	-	0.2	-	0	4	4	-10	140	FDA FKM	**3019F1NVG7**	**-**	**D4**	13	16	24.0	072
	3	2.5	3.3	-	0.2	-	0	4	4	-10	140	FDA FKM	**3019F1NVG7**	**-**	**D5**	8	9	24.0	072
	3	2.5	3.3	-	0.2	-	0	4	4	-10	140	FDA FKM	**3019F1NVG7**	**-**	**LA**	9	9	24.0	072
	3	2.5	3.3	-	0.2	-	0	4	4	-10	140	FDA FKM	**3019F1NVG7**	**-**	**LB-LC**	13	16	24.0	072
	3	2.5	3.3	-	0.2	-	0	4	-	-10	140	FDA FKM	**3019F1NVG7**	**-**	**XS03**	9	-	24.0	072
	3	2.5	4.2	-	0.25	-	0	4	4	-10	140	Ruby	**301XGFRTN7**	**-**	**D4**	13	16	24.0	073
	3	2.5	4.2	-	0.25	-	0	4	4	-10	140	Ruby	**301XGFRTN7**	**-**	**D5**	8	9	24.0	073
	3	2.5	4.2	-	0.25	-	0	4	4	-10	140	Ruby	**301XGFRTN7**	**-**	**LA**	9	9	24.0	073
	3	2.5	4.2	-	0.25	-	0	4	4	-10	140	Ruby	**301XGFRTN7**	**-**	**LB-LC**	13	16	24.0	073
	3	2.5	4.2	-	0.25	-	0	4	-	-10	140	Ruby	**301XGFRTN7**	**-**	**XS03**	9	-	24.0	073
	3	2.5	4.2	-	0.25	-	0	4	4	-10	140	FDA FKM	**301XGFVTN7**	**-**	**D4**	13	16	24.0	073
	3	2.5	4.2	-	0.25	-	0	4	4	-10	140	FDA FKM	**301XGFVTN7**	**-**	**D5**	8	9	24.0	073
	3	2.5	4.2	-	0.25	-	0	4	4	-10	140	FDA FKM	**301XGFVTN7**	**-**	**LA**	9	9	24.0	073
	3	2.5	4.2	-	0.25	-	0	4	4	-10	140	FDA FKM	**301XGFVTN7**	**-**	**LB-LC**	13	16	24.0	073
	3	2.5	4.2	-	0.25	-	0	4	-	-10	140	FDA FKM	**301XGFVTN7**	**-**	**XS03**	9	-	24.0	073

For this page	Port size	Orifice (mm)	Kv (l/min)	MOPD (bar)	Fluid Temp (°C)	Amb Temp (°C)
From	SB	2.5	2.8	4	-10	-10
To	SB	3	4.2	6.5	140	50

Drawing 073

Drawing 072

2 WAY

2/2

Actuation	Body	Function	Port Size	Orifice (mm)	Flow Factor Kv(l/min)	MOPD (bar)	Max Fluid Temp. (°C)	Page Parker Valves	Page Parker LUCIFER® Valves
Pilot Operated	Brass/Quick Coupling	Normally Closed	10 mm	11	12	3	90	-	266
	Brass/Barb Fitting	Normally Closed	10 mm	11	12	3	90	-	266
	Brass/Pipe Mounting	Normally Closed	12.7 mm	11	33	3	90	-	268
			15.9 mm	11	36	3	90	-	268

2/2 2 WAY PILOT OPERATED

BRASS QUICK COUPLING

NORMALLY CLOSED

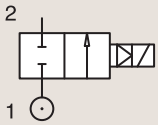

Port size	Orifice Ø	Flow factors			Operating Pressure Differential			Fluid Temp.		Seat Seal	Parker LUCIFER® Valves			Voltage	Power		Coil Group	Dwg. No.
					Min	Max(MOPD)		Min	Max		Valve Ref.	Housing Ref.	Coil Ref.					
	mm	Kv l/min	KV m³/h	Qn l/min	bar	AC bar	DC bar	°C	°C						AC W	DC W		
10 mm	11	12	0.72	-	0.2	-	3	-40	90	EPDM	**321K1543**	**2168**	**495294**	12 VDC	-	9	13.0	8242
	11	12	0.72	-	0.2	-	3	-40	90	EPDM	**321K1543**	**2169**	**495294**	24 VDC	-	9	13.0	8242
	11	12	0.72	-	0.2	-	3	-40	90	EPDM	**321K1543**	**2168**	**496193**	12 VDC	-	9	13.0	8242
	11	12	0.72	-	0.2	-	3	-40	90	EPDM	**321K1543**	**2169**	**496193**	24 VDC	-	9	13.0	8242

BRASS BARB FITTING

NORMALLY CLOSED

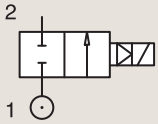

Port size	Orifice Ø	Flow factors			Operating Pressure Differential			Fluid Temp.		Seat Seal	Parker LUCIFER® Valves			Voltage	Power		Coil Group	Dwg. No.
					Min	Max(MOPD)		Min	Max		Valve Ref.	Housing Ref.	Coil Ref.					
	mm	Kv l/min	KV m³/h	Qn l/min	bar	AC bar	DC bar	°C	°C						AC W	DC W		
10 mm	11	12	0.72	-	0.2	-	3	-40	90	EPDM	**321K1535**	**2168**	**495294**	12 VDC	-	9	13.0	8241
	11	12	0.72	-	0.2	-	3	-40	90	EPDM	**321K1535**	**2169**	**495294**	24 VDC	-	9	13.0	8241
	11	12	0.72	-	0.2	-	3	-40	90	EPDM	**321K1535**	**2168**	**496193**	12 VDC	-	9	13.0	8241
	11	12	0.72	-	0.2	-	3	-40	90	EPDM	**321K1535**	**2169**	**496193**	24 VDC	-	9	13.0	8241

For this page	Port size	Orifice (mm)	Kv (l/min)	MOPD (bar)	Fluid Temp (°C)	Amb Temp (°C)
From	10 mm	11	12	3	-40	-40
To	10 mm	11	12	3	90	80

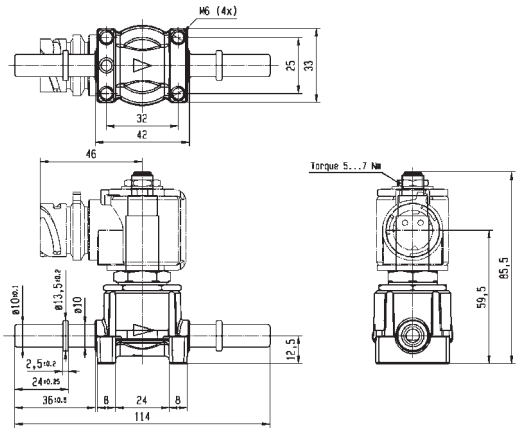

Drawing 8242

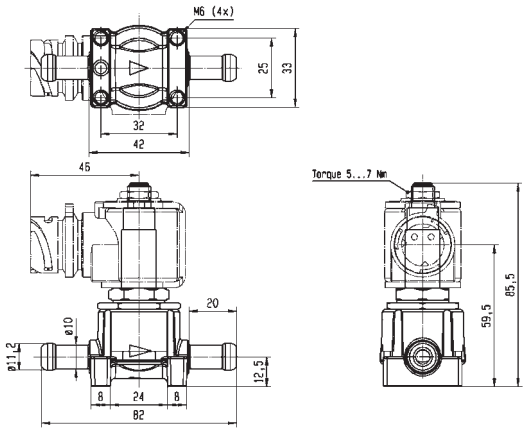

Drawing 8241

2/2 2 WAY PILOT OPERATED

BRASS PIPE MOUNTING

NORMALLY CLOSED

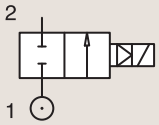

Port size	Orifice Ø	Flow factors			Operating Pressure Differential			Fluid Temp.		Seat Seal	Parker LUCIFER® Valves			Voltage	Power		Coil Group	Dwg. No.
					Min	Max(MOPD)		Min	Max		Valve Ref.	Housing Ref.	Coil Ref.					
	mm	Kv l/min	KV m³/h	Qn l/min	bar	AC bar	DC bar	°C	°C						AC W	DC W		
1/2" BSP	11	36	2.16	-	0.2	-	3	-40	90	EPDM	**321K1523**	**2168**	**495294**	12 VDC	-	9	13.0	8238
	11	36	2.16	-	0.2	-	3	-40	90	EPDM	**321K1523**	**2169**	**495294**	24 VDC	-	9	13.0	8238
	11	36	2.16	-	0.2	-	3	-40	90	EPDM	**321K1523**	**2168**	**496193**	12 VDC	-	9	13.0	8238
	11	36	2.16	-	0.2	-	3	-40	90	EPDM	**321K1523**	**2169**	**496193**	24 VDC	-	9	13.0	8238
12.7 mm	11	33	1.98	-	0.2	-	3	-40	90	EPDM	**321K1536**	**2168**	**495294**	12 VDC	-	9	13.0	8282
	11	33	1.98	-	0.2	-	3	-40	90	EPDM	**321K1536**	**2169**	**495294**	24 VDC	-	9	13.0	8282
	11	33	1.98	-	0.2	-	3	-40	90	EPDM	**321K1536**	**2168**	**496193**	12 VDC	-	9	13.0	8282
	11	33	1.98	-	0.2	-	3	-40	90	EPDM	**321K1536**	**2169**	**496193**	24 VDC	-	9	13.0	8282
15.9 mm	11	36	2.16	-	0.2	-	3	-40	90	EPDM	**321K1537**	**2168**	**495294**	12 VDC	-	9	13.0	8281
	11	36	2.16	-	0.2	-	3	-40	90	EPDM	**321K1537**	**2169**	**495294**	24 VDC	-	9	13.0	8281
	11	36	2.16	-	0.2	-	3	-40	90	EPDM	**321K1537**	**2168**	**496193**	12 VDC	-	9	13.0	8281
	11	36	2.16	-	0.2	-	3	-40	90	EPDM	**321K1537**	**2169**	**496193**	24 VDC	-	9	13.0	8281

For this page	Port size	Orifice (mm)	Kv (l/min)	MOPD (bar)	Fluid Temp (°C)	Amb Temp (°C)
From	1/2"	11	33	3	-40	-40
To	15.9 mm	11	36	3	90	80

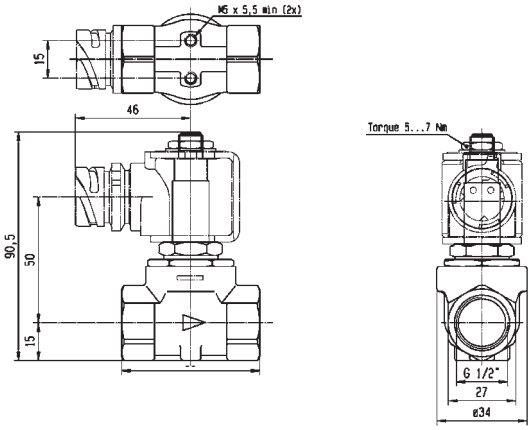

Drawing 8238

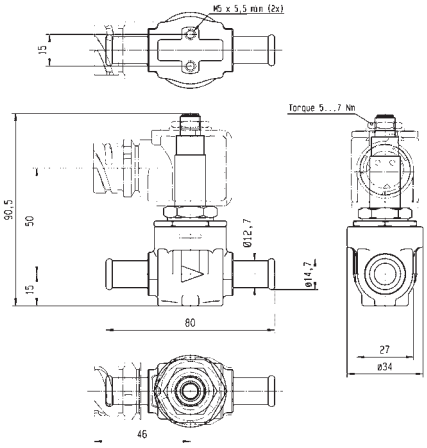

Drawing 8282

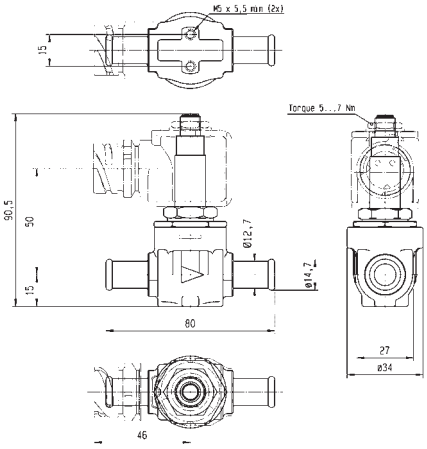

Drawing 8281

3 WAY

3/2

Actuation	Body	Function	Port Size	Orifice (mm)	Flow Factor Kv(l/min)	MOPD (bar)	Max Fluid Temp. (°C)	Page Parker Valves	Page Parker LUCIFER® Valves
Direct Operated PWM	Brass/Quick Coupling	Normally Closed	1/8''	1.8	0	8	80	-	272

3/2

3 WAY

DIRECT OPERATED PWM

BRASS
QUICK COUPLING
NORMALLY CLOSED

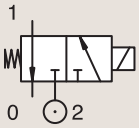

Port size	Orifice Ø		Flow factor	Operating Pressure Differential			Fluid Temp.		Seat Seal	Parker LUCIFER® Valves			Power		Coil Group	Dwg. No.
	1	(2)		Min	Max (MOPD)		Min	Max								
BSP	mm		Qn l/min	bar	AC bar	DC bar	°C	°C		Valve Ref.	Housing Ref.	Coil Ref.	AC W	DC W		
1/8"	1.8	1.5	110	0	-	8	-30	80	TPE/PVDF	**131K0648**[1]	**2161**	**495294**	-	9	13.0	7872
	1.8	1.5	110	0	-	8	-30	80	TPE/PVDF	**131K0648**[1]	**2161**	**496193**	-	9	13.0	7872

Notes:

1. Valve Pulse Width Modulated

For this page	Port size	Orifice (mm)	Qn (l/min)	MOPD (bar)	Fluid Temp (°C)	Amb Temp (°C)
From	1/8"	1.8	110	8	-30	-30
To	1/8"	1.8	110	8	80	85

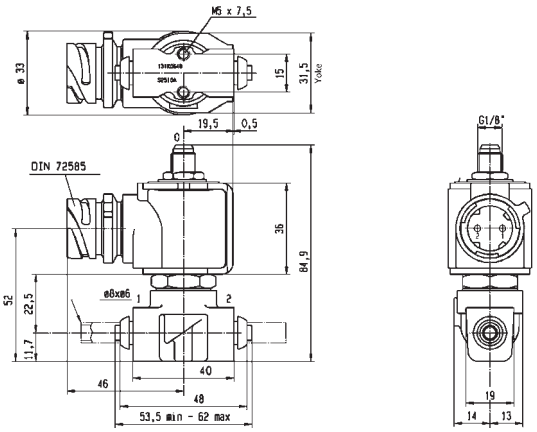

Drawing 7872

5 WAY PNEUMATIC DISTRIBUTORS (PIPE MOUNTING/SUB-BASE MOUNTING)

5/2

Actuation	Body	Function	Port Size	Orifice (mm)	Qn (l/min)	MOPD (bar)	Max Fluid Temp. (°C)	Page Parker Valves	Page Parker LUCIFER® Valves
Pilot Operated	Anodized aluminium/ Pipe mounting	Normally Closed	1/8''-1/4''	6	630	10	75	-	276
			1/4''	6 to 14	2500	40	75	-	276
			1/2''	14	2500	15	75	-	278
		Control by Electric Impulse	1/8''-1/4''	6	630	10	75	-	280
			1/4''	8 to 14	2500	15	75	-	280
	Anodized aluminium/ Pipe mounting/Poppet	Normally Closed	1/8''	4	400	10	75	-	282
		Dual Solenoids	1/8''	4	315	10	75	-	282
	Anodized aluminium/ Sub-base mounting	Normally Closed	1/8''	6	630	10	75	-	284
		Control by Electric Impulse	1/8''	6	630	10	75	-	284
	Anodized aluminium/ Sub-base mounting/ Poppet	Normally Closed	-	15	5000	10	75	-	286
			1/8''	15	5000	10	75	-	286
			4 mm	4	400	10	75	-	286
		Dual Solenoids	4 mm	4	315	10	75	-	288
		Control by Electric Impulse	-	15	5000	10	75	-	288
	Anodized aluminium/ CETOP/Poppet	Dual Solenoids	1/8''	6	800	10	75	-	288
	Anodized aluminium/ Pipe mounting/Poppet	Normally Closed	1/4''	8	1400	10	75	-	290
		Dual Solenoids	1/4''	8	1400	10	100	-	292
	POM/CETOP/Poppet	Normally Closed	-	6 to 8	800	10	75	-	292
			1/8''	6	800	10	75	-	294
		Control by Electric Impulse	1/8''	6	800	10	75	-	296
Externally Operated	Anodized aluminium/ Sub-base mounting	Normally Closed	1/8''	7	800	10	75	-	298

5/2 5 WAY PNEUMATIC DISTRIBUTORS (PIPE MOUNTING/SUB-BASE MOUNTING)

PILOT OPERATED

Process

Industrial Equipment

ANODIZED ALUMINIUM PIPE MOUNTING

NORMALLY CLOSED

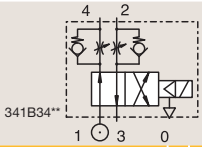

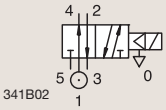

Port size BSP	Orifice Ø 1 mm	Flow factor Qn l/min	Operating Pressure Differential Min bar	Max (MOPD) AC bar	Max (MOPD) DC bar	Fluid Temp. Min °C	Fluid Temp. Max °C	Seat Seal	Parker LUCIFER® Valves: Valve Ref.	Housing Ref.	Coil Ref.	IS	Power AC W	Power DC W	Coil Group	Dwg. No.
1/8" 1/4"	6	630	1	10	10	-10	75	FKM	**341B34 2**	**4270**	**481000**		8	8	2.0	3286
	6	630	1	10	10	-10	75	FKM	**341B34 2**	**2995**	**481865**		8	9	2.0	3286
	6	630	1	10	10	-10	75	FKM	**341B34 2**	**4270**	**486265**		14	14	2.0	3286
	6	630	1	10	10	-10	75	FKM	**341B3403**	**4270**	**481000**		8	8	2.1	3286
	6	630	1	10	10	-10	75	FKM	**341B3403**	**2995**	**481865**		8	9	2.1	3286
	6	560	1	-	10	-10	55	NBR	**341B3490**	**2995**	**483580.01**	*	-	0.5 to 3	7.0/8.0	3561
	6	560	1	-	10	-10	75	NBR	**341B3490**	**-**	**488660.01**	*	-	0.3 to 3	7.0/8.0	3561
	6	560	1	-	10	-10	75	NBR	**341B3490**	**-**	**495910**	*	-	0.3 to 3	7.0/8.0	3561
1/4"	6	630	1	10	10	-25	75	PUR	**341B3440**	**4270**	**481000**		8	8	2.1	3286
	6	630	1	10	10	-25	75	PUR	**341B3440**	**2995**	**481865**		8	9	2.1	3286
	8	640	1	40	40	-10	75	NBR	**341B02 1**	**4270**	**481000**		8	8	2.1	8115
	8	640	1	40	40	-10	75	NBR	**341B02 1**	**2995**	**481865**		8	9	2.1	8115

Notes:

1. Valve with pilot return pipe on exhaust port
2. With flow regulator

For this page	Port size	Orifice (mm)	Qn (l/min)	MOPD (bar)	Fluid Temp (°C)	Amb Temp (°C)
From	1/8"-1/4"	6	560	10	-25	-25
To	1/4"	8	640	40	75	50

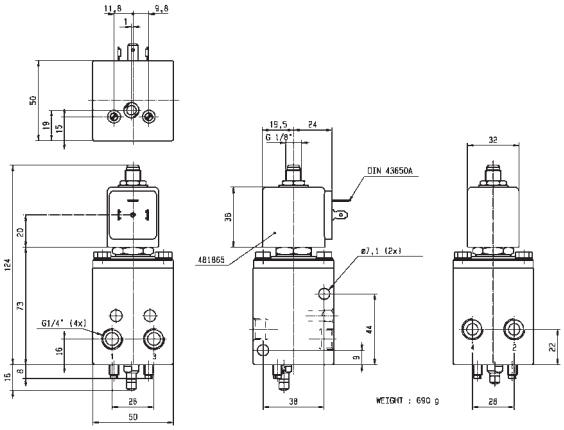

Drawing 3286

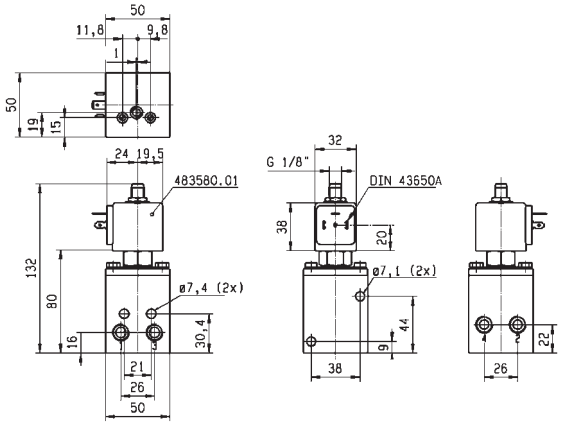

Drawing 3561

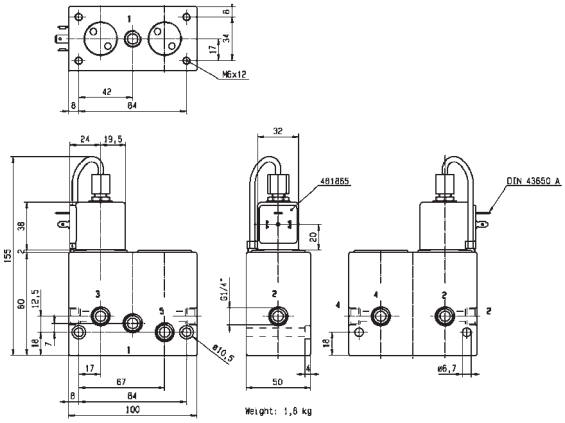

Drawing 8115

5/2

5 WAY PNEUMATIC DISTRIBUTORS (PIPE MOUNTING/SUB-BASE MOUNTING)

PILOT OPERATED

ANODIZED ALUMINIUM PIPE MOUNTING

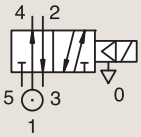

NORMALLY CLOSED

Port size	Orifice Ø	Flow factor	Operating Pressure Differential			Fluid Temp.		Seat Seal	Parker LUCIFER® Valves			Power		Coil Group	Dwg. No.
	1		Min	Max (MOPD)		Min	Max		Valve Ref.	Housing Ref.	Coil Ref.				
BSP	mm	Qn l/min	bar	AC bar	DC bar	°C	°C					AC W	DC W		
1/4"	8	1000	1	15	15	-10	75	NBR	**E341B01**	**2995**	**481865**	8	9	2.1	3309
	8	1000	1	15	15	-10	75	NBR	**E341B01**	**4270**	**485100**	8	8	2.1	3309
	14	2500	2	15	15	-10	75	NBR	**E341F21**	**4270**	**481000**	8	8	2.1	3310
1/2"	14	2500	1	15	15	-10	75	NBR	**E341B21** [1]	**2995**	**481865**	8	9	2.1	3315
	14	2500	1	15	15	-10	75	NBR	**E341B21** [1]	**-**	**483371**	8	8	2.1	3315

Notes:

1. Valve only compatible with air and neutral gases

For this page	Port size	Orifice (mm)	Qn (l/min)	MOPD (bar)	Fluid Temp (°C)	Amb Temp (°C)
From	1/4"	8	1000	15	-10	-10
To	1/2"	14	2500	15	75	50

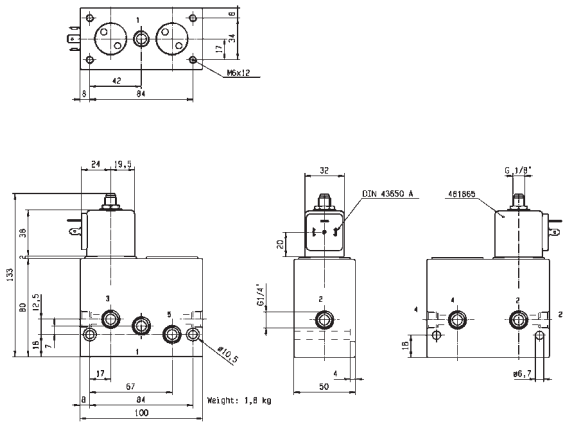

Drawing 3309

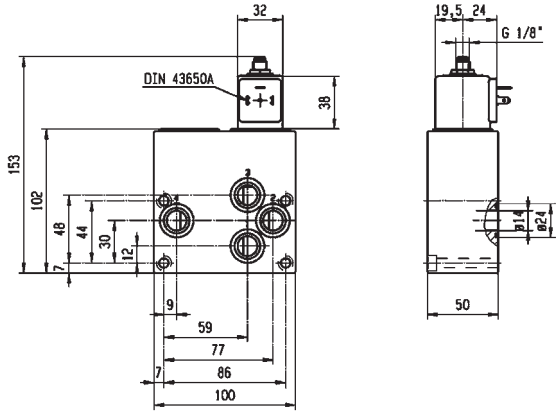

Drawing 3310

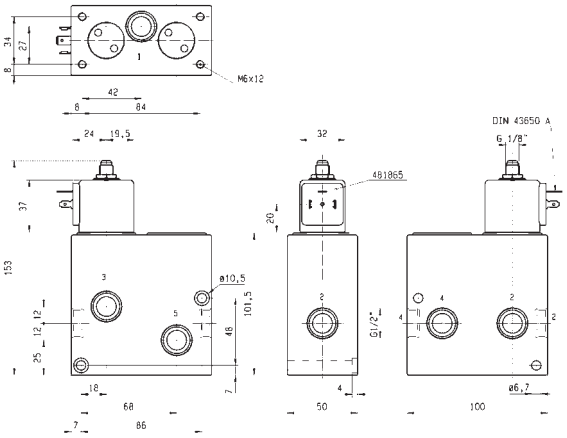

Drawing 3315

5/2

5 WAY PNEUMATIC DISTRIBUTORS (PIPE MOUNTING/SUB-BASE MOUNTING)

PILOT OPERATED

ANODIZED ALUMINIUM PIPE MOUNTING

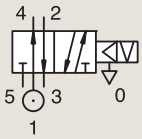

CONTROL BY ELECTRIC IMPULSE

Port size	Orifice Ø	Flow factor	Operating Pressure Differential			Fluid Temp.		Seat Seal	Parker LUCIFER® Valves			Power		Coil Group	Dwg. No.
	1		Min	Max (MOPD)		Min	Max		Valve Ref.	Housing Ref.	Coil Ref.				
BSP	mm	Qn l/min	bar	AC bar	DC bar	°C	°C					AC W	DC W		
1/8"-1/4"	6	630	1	10	-	-10	75	NBR	**345B34** [12]	**4269**	**484990**	11	-	4.0	3286
	6	630	1	-	10	-10	75	NBR	**345B34** [12]	**4269**	**485400**	-	13	4.0	3286
1/4"	8	1000	1	15	-	-10	75	NBR	**345B04**	**4269**	**484990**	11	-	4.0	3309
	8	1000	1	-	15	-10	75	NBR	**345B04**	**4269**	**485400**	-	13	4.0	3309
	14	2500	1	15	-	-10	75	NBR	**345B24**	**4269**	**484990**	11	-	4.0	3315
	14	2500	1	-	15	-10	75	NBR	**345B24**	**4269**	**485400**	-	13	4.0	3315

Notes:

1. Valve only compatible with air and neutral gases
2. With flow regulator

For this page	Port size	Orifice (mm)	Qn (l/min)	MOPD (bar)	Fluid Temp (°C)	Amb Temp (°C)
From	1/8"-1/4"	6	630	10	-10	-10
To	1/4"	14	2500	15	75	50

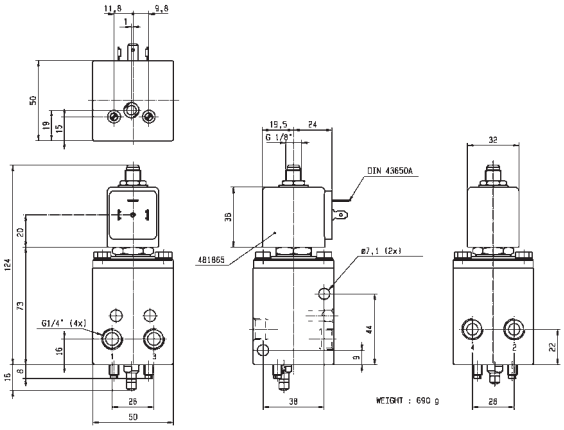

Drawing 3286

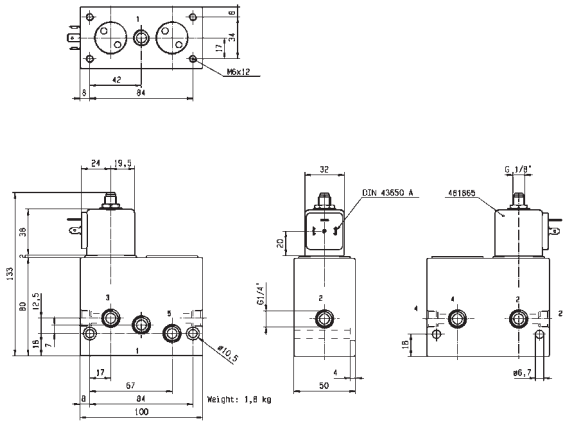

Drawing 3309

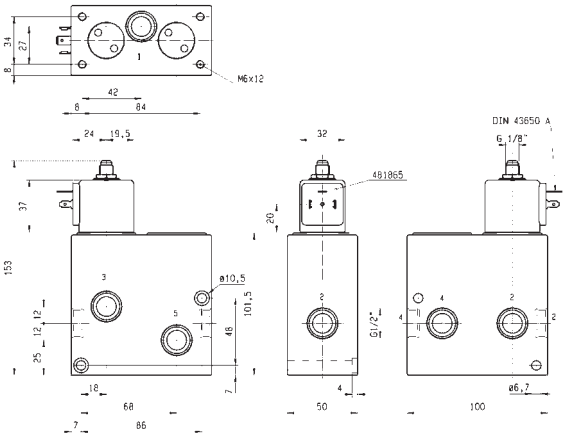

Drawing 3315

5/2 5 WAY PNEUMATIC DISTRIBUTORS (PIPE MOUNTING/SUB-BASE MOUNTING)

PILOT OPERATED

ANODIZED ALUMINIUM PIPE MOUNTING

NORMALLY CLOSED

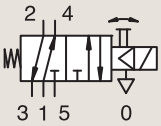

Port size BSP	Orifice Ø 1 mm	Flow factor Qn l/min	Operating Pressure Differential Min bar	Max (MOPD) AC bar	Max (MOPD) DC bar	Fluid Temp. Min °C	Fluid Temp. Max °C	Seat Seal	Parker LUCIFER® Valves: Valve Ref.	Housing Ref.	Coil Ref.	Power AC W	Power DC W	Coil Group	Dwg. No.
1/8"	4	400	1	10	10	-10	75	NBR	341L9101 [1]	-	482605	4	5	1.1	3894
	4	400	1	10	10	-10	75	NBR	341L9101 [1]	-	482606	2	2.5	1.1	3894
	4	400	1	10	10	-10	75	NBR	341L9101 [1]	8993	488980	2	2.5	1.1	3894
	4	400	1	10	10	-10	75	NBR	341L9101 [1]	8993	495865	2	2.5	1.1	3894

Notes:

1. With manual override

ANODIZED ALUMINIUM PIPE MOUNTING

DUAL SOLENOIDS

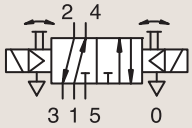

Port size BSP	Orifice Ø 1 mm	Flow factor Qn l/min	Operating Pressure Differential Min bar	Max (MOPD) AC bar	Max (MOPD) DC bar	Fluid Temp. Min °C	Fluid Temp. Max °C	Seat Seal	Parker LUCIFER® Valves: Valve Ref.	Housing Ref.	Coil Ref.	Power AC W	Power DC W	Coil Group	Dwg. No.
1/8"	4	315	2	10	10	-10	75	NBR	347L9101 [1]	-	482605	4	5	1.1	3896
	4	315	2	10	10	-10	75	NBR	347L9101 [1]	-	482606	2	2.5	1.1	3896
	4	315	2	10	10	-10	75	NBR	347L9101 [1]	8993	488980	2	2.5	1.1	3896
	4	315	2	10	10	-10	75	NBR	347L9101 [1]	8993	495865	2	2.5	1.1	3896

Notes:

1. With manual override

For this page	Port size	Orifice (mm)	Qn (l/min)	MOPD (bar)	Fluid Temp (°C)	Amb Temp (°C)
From	1/8"	4	315	10	-10	-10
To	1/8"	4	400	10	75	50

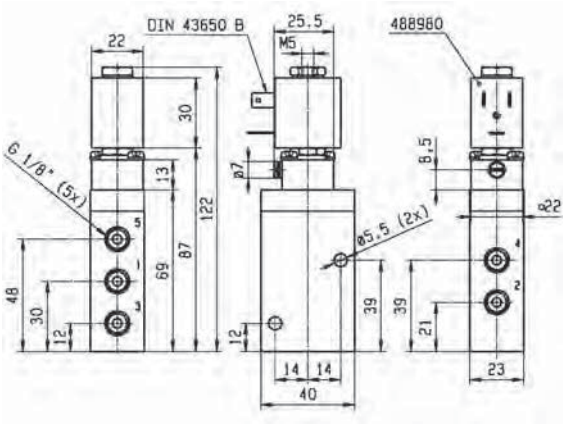

Drawing 3894

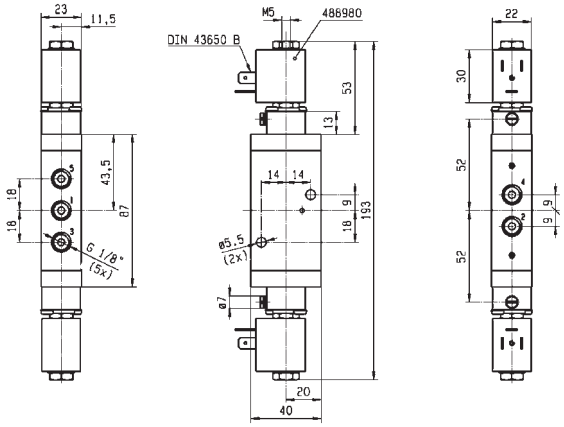

Drawing 3896

5/2

5 WAY PNEUMATIC DISTRIBUTORS (PIPE MOUNTING/SUB-BASE MOUNTING)

PILOT OPERATED

ANODIZED ALUMINIUM SUB-BASE MOUNTING

NORMALLY CLOSED

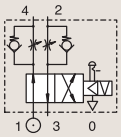

Port size	Orifice Ø 1 mm	Flow factor Qn l/min	Operating Pressure Differential Min bar	Max (MOPD) AC bar	Max (MOPD) DC bar	Fluid Temp. Min °C	Fluid Temp. Max °C	Seat Seal	Parker LUCIFER® Valves: Valve Ref.	Housing Ref.	Coil Ref.	Power AC W	Power DC W	Coil Group	Dwg. No.
SB	6	630	1	10	10	-10	75	FKM	**341F34** [1]	**2995**	**481865**	8	9	2.1	3287
	6	630	1	10	10	-10	75	FKM	**341F34** [1]	**4270**	**481000**	8	8	2.1	3287
	6	630	1	10	10	-10	75	FKM	**341F3403**	**2995**	**481865**	8	9	2.1	3287
	6	630	1	10	10	-10	75	FKM	**341F3403**	**4270**	**481000**	8	8	2.1	3287
	6	630	1	10	10	-25	75	NBR	**341F3440**	**2995**	**481865**	8	9	2.1	3287

Notes:

1. With flow regulator

ANODIZED ALUMINIUM SUB-BASE MOUNTING

CONTROL BY ELECTRIC IMPULSE

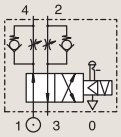

Port size	Orifice Ø 1 mm	Flow factor Qn l/min	Operating Pressure Differential Min bar	Max (MOPD) AC bar	Max (MOPD) DC bar	Fluid Temp. Min °C	Fluid Temp. Max °C	Seat Seal	Parker LUCIFER® Valves: Valve Ref.	Housing Ref.	Coil Ref.	Power AC W	Power DC W	Coil Group	Dwg. No.
SB	6	630	1	10	-	-10	75	FKM	**345F34** [1]	**4269**	**484990**	11	-	4.0	3287
	6	630	1	-	10	-10	75	FKM	**345F34** [1]	**4269**	**485400**	-	13	4.0	3287

Notes:

1. With flow regulator

For this page	Port size	Orifice (mm)	Qn (l/min)	MOPD (bar)	Fluid Temp (°C)	Amb Temp (°C)
From	SB	6	630	10	-25	-25
To	SB	6	630	10	75	50

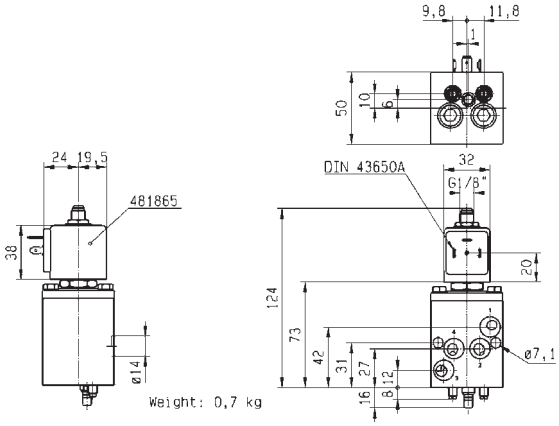

Drawing 3287

5/2 5 WAY PNEUMATIC DISTRIBUTORS (PIPE MOUNTING/SUB-BASE MOUNTING)

PILOT OPERATED

ANODIZED ALUMINIUM SUB-BASE MOUNTING ISO

NORMALLY CLOSED

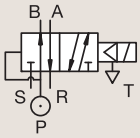

Port size	Orifice Ø 1 mm	Flow factor Qn l/min	Operating Pressure Differential Min bar	Max (MOPD) AC bar	Max (MOPD) DC bar	Fluid Temp. Min °C	Fluid Temp. Max °C	Seat Seal	Parker LUCIFER® Valves Valve Ref.	Housing Ref.	Coil Ref.	IS	Power AC W	Power DC W	Coil Group	Dwg. No.
SB	15	5000	0.5	10	10	-10	75	FKM	E341L21 [1]	2995	481865		8	9	2.1/3.0	3299
	15	5000	0.5	10	10	-10	75	FKM	E341L21 [1]	-	495905		8	8	2.1/3.0	3299
	15	5000	0.5	-	10	-10	55	NBR	341L2190 [1]	2995	483580.01	*	-	0.5 to 3	7.0/8.0	8271
	15	5000	0.5	-	10	-10	75	NBR	341L2190 [1]	-	488660.01	*	-	0.3 to 3	7.0/8.0	8271
	15	5000	0.5	-	10	-10	75	NBR	341L2190 [1]	-	495910	*	-	0.3 to 3	7.0/8.0	8271

Notes:

1. Valve with manual override

ANODIZED ALUMINIUM SUB-BASE MOUNTING

NORMALLY CLOSED

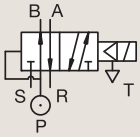

Port size	Orifice Ø 1 mm	Flow factor Qn l/min	Operating Pressure Differential Min bar	Max (MOPD) AC bar	Max (MOPD) DC bar	Fluid Temp. Min °C	Fluid Temp. Max °C	Seat Seal	Parker LUCIFER® Valves Valve Ref.	Housing Ref.	Coil Ref.	Power AC W	Power DC W	Coil Group	Dwg. No.
SB	4	400	1	10	10	-10	75	NBR	341L9201 [1]	-	482605	-	5	1.1	3895
	4	400	1	10	10	-10	75	NBR	341L9201 [1]	-	482606	2	2.5	1.1	3895
	4	400	1	10	10	-10	75	NBR	341L9201 [1]	8993	488980	2	2.5	1.1	3895
	4	400	1	10	10	-10	75	NBR	341L9201 [1]	8993	495865	2	2.5	1.1	3895

Notes:

1. Valve with manual override

For this page	Port size	Orifice (mm)	Qn (l/min)	MOPD (bar)	Fluid Temp (°C)	Amb Temp (°C)
From	SB	4	400	10	-10	-10
To	SB	15	5000	10	75	50

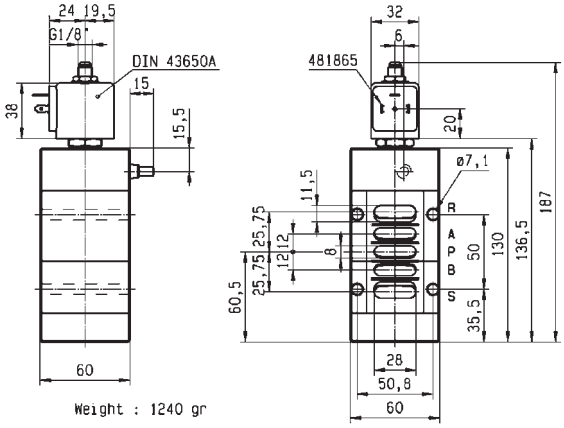

Drawing 3299

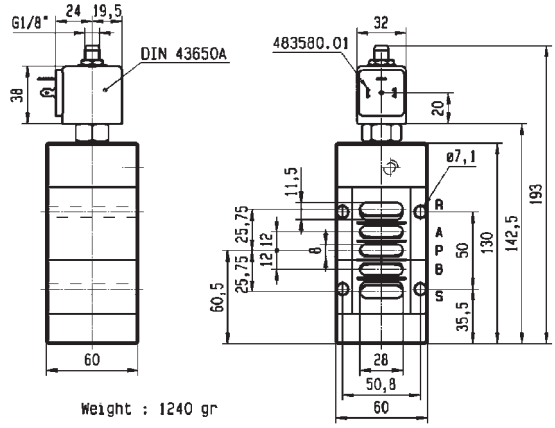

Drawing 8271

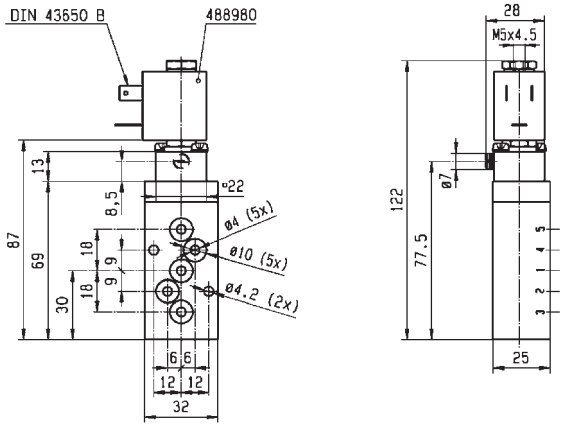

Drawing 3895

5/2 5 WAY PNEUMATIC DISTRIBUTORS (PIPE MOUNTING/SUB-BASE MOUNTING)

PILOT OPERATED

ANODIZED ALUMINIUM SUB-BASE MOUNTING

DUAL SOLENOIDS

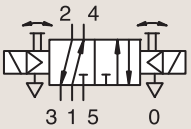

Port size	Orifice Ø 1 mm	Flow factor Qn l/min	Operating Pressure Differential Min bar	Max (MOPD) AC bar	Max (MOPD) DC bar	Fluid Temp. Min °C	Fluid Temp. Max °C	Seat Seal	Valve Ref.	Parker LUCIFER® Valves Housing Ref.	Parker LUCIFER® Valves Coil Ref.	Power AC W	Power DC W	Coil Group	Dwg. No.
SB	4	315	2	10	10	-10	75	NBR	347L9201	-	482605	-	5	1.1	3897
	4	315	2	10	10	-10	75	NBR	347L9201	-	482606	2	2.5	1.1	3897
	4	315	2	10	10	-10	75	NBR	347L9201	8993	488980	2	2.5	1.1	3897
	4	315	2	10	10	-10	75	NBR	347L9201	8993	495865	2	2.5	1.1	3897

ANODIZED ALUMINIUM SUB-BASE MOUNTING

CONTROL BY ELECTRIC IMPULSE

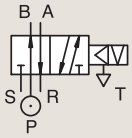

Port size	Orifice Ø 1 mm	Flow factor Qn l/min	Operating Pressure Differential Min bar	Max (MOPD) AC bar	Max (MOPD) DC bar	Fluid Temp. Min °C	Fluid Temp. Max °C	Seat Seal	Valve Ref.	Parker LUCIFER® Valves Housing Ref.	Parker LUCIFER® Valves Coil Ref.	Power AC W	Power DC W	Coil Group	Dwg. No.
SB	15	5000	0.5	10	-	-10	75	NBR	345L21	4269	484990	11	-	4.0	3299
	15	5000	0.5	-	10	-10	75	NBR	345L21	4269	485400	-	13	4.0	3299

ANODIZED ALUMINIUM CETOP

DUAL SOLENOIDS

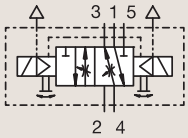

Port size BSP	Orifice Ø 1 mm	Flow factor Qn l/min	Operating Pressure Differential Min bar	Max (MOPD) AC bar	Max (MOPD) DC bar	Fluid Temp. Min °C	Fluid Temp. Max °C	Seat Seal	Valve Ref.	Parker LUCIFER® Valves Housing Ref.	Parker LUCIFER® Valves Coil Ref.	Power AC W	Power DC W	Coil Group	Dwg. No.
1/8"	6	800	1	10	10	-10	75	NBR	347L04	8993	488980	2	2.5	1.1	3694

For this page	Port size	Orifice (mm)	Qn (l/min)	MOPD (bar)	Fluid Temp (°C)	Amb Temp (°C)
From	SB	4	315	10	-10	-10
To	4 mm	15	5000	10	75	50

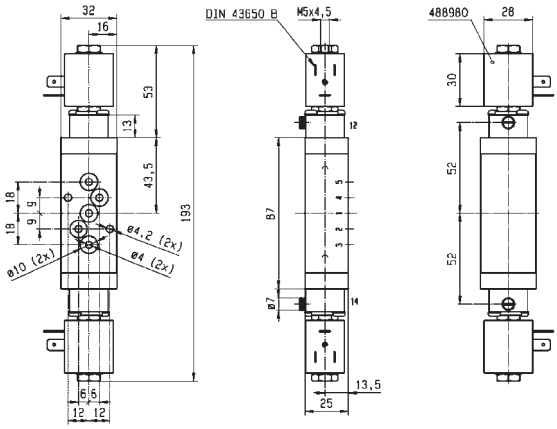

Drawing 3897

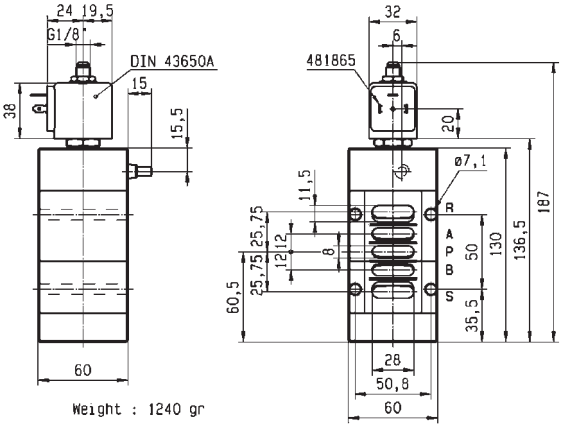

Drawing 3299

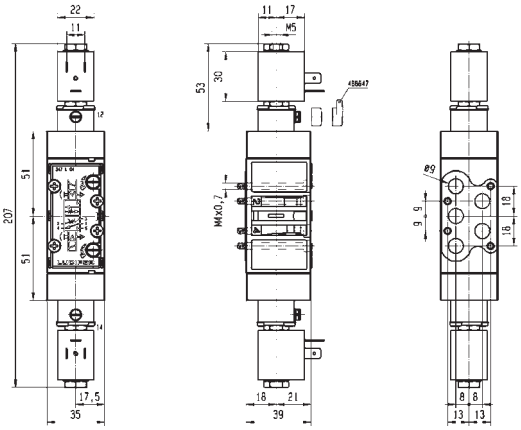

Drawing 3694

5/2

5 WAY PNEUMATIC DISTRIBUTORS (PIPE MOUNTING/SUB-BASE MOUNTING)

PILOT OPERATED

ANODIZED ALUMINIUM PIPE MOUNTING

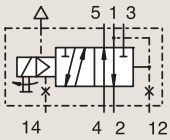

NORMALLY CLOSED

Port size BSP	Orifice Ø 1 mm	Flow factor Qn l/min	Operating Pressure Differential Min bar	Max (MOPD) AC bar	Max (MOPD) DC bar	Fluid Temp. Min °C	Fluid Temp. Max °C	Seat Seal	Parker LUCIFER® Valves Valve Ref.	Housing Ref.	Coil Ref.	Power AC W	Power DC W	Coil Group	Dwg. No.
1/4"	8	1400	1	10	10	-10	75	NBR	**341L11**	**-**	**482605**	4	5	1.1	3434
	8	1400	1	10	10	-10	75	NBR	**341L11**	**-**	**482606**	2	2.5	1.1	3434
	8	1400	1	10	10	-10	75	NBR	**341L11**	**8993**	**488980**	2	2.5	1.1	3434
	8	1400	1	10	10	-10	75	NBR	**341L11**	**8993**	**495865**	2	2.5	1.1	3434
	8	1400	1	10	10	-10	75	NBR	**E341L1130**	**2995**	**481865**	8	9	2.1/3.0	3539
	8	1400	1	10	10	-10	75	NBR	**E341L1130**	**-**	**483371**	8	8	2.1/3.0	3539
1/4" NPT	8	1400	1	10	10	-10	75	FKM	**U341L1130**	**2995**	**481865**	8	9	2.1	8297
	8	1400	1	10	10	-10	75	FKM	**U341L1130**	**2995**	**491514**	11	12	2.1	8297

For this page	Port size	Orifice (mm)	Qn (l/min)	MOPD (bar)	Fluid Temp (°C)	Amb Temp (°C)
From	1/4"	8	1400	10	-10	-10
To	1/4"	8	1400	10	75	50

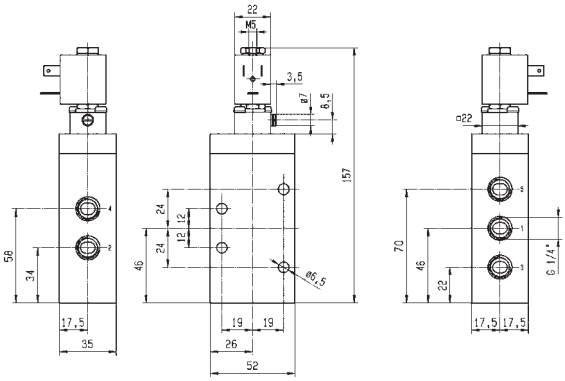

Drawing 3434

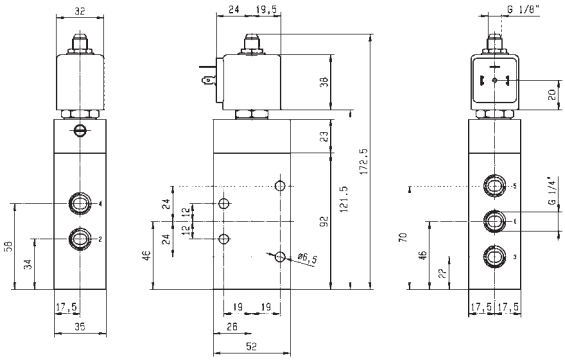

Drawing 3539

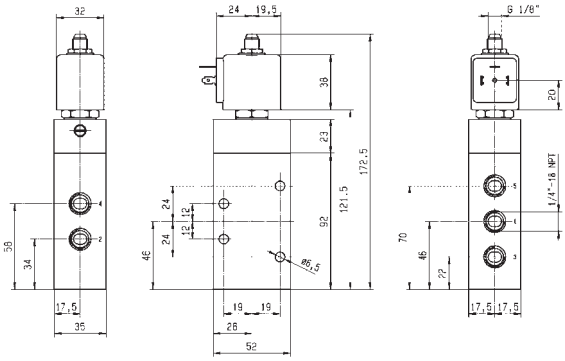

Drawing 8297

5/2

5 WAY PNEUMATIC DISTRIBUTORS (PIPE MOUNTING/SUB-BASE MOUNTING)

PILOT OPERATED

ANODIZED ALUMINIUM PIPE MOUNTING

DUAL SOLENOIDS

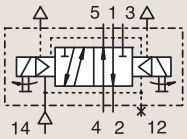

Port size BSP	Orifice Ø 1 mm	Flow factor Qn l/min	Operating Pressure Differential Min bar	Max (MOPD) AC bar	Max (MOPD) DC bar	Fluid Temp. Min °C	Fluid Temp. Max °C	Seat Seal	Parker LUCIFER® Valves: Valve Ref.	Housing Ref.	Coil Ref.	Power AC W	Power DC W	Coil Group	Dwg. No.
1/4"	8	1400	1	10	10	-10	75	NBR	**347L11** [1]	-	**482605**	4	5	1.1	3461
	8	1400	1	10	10	-10	75	NBR	**347L11** [1]	-	**482606**	2	2.5	1.1	3461
	8	1400	1	10	10	-10	75	NBR	**347L11** [1]	**8993**	**488980**	2	2.5	1.1	3461
	8	1400	1	10	10	-10	75	NBR	**347L11** [1]	**8993**	**495865**	2	2.5	1.1	3461
	8	1400	2	10	10	-10	100	FKM	**E347L1130** [1]	**2995**	**481865**	8	9	2.1/3.0	3541
	8	1400	2	10	10	-10	100	FKM	**E347L1130** [1]	**4270**	**481000**	8	8	2.1/3.0	3541

Notes:

1. With manual override

POM CETOP

NORMALLY CLOSED

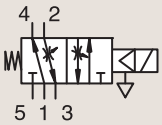

Port size	Orifice Ø 1 mm	Flow factor Qn l/min	Operating Pressure Differential Min bar	Max (MOPD) AC bar	Max (MOPD) DC bar	Fluid Temp. Min °C	Fluid Temp. Max °C	Seat Seal	Parker LUCIFER® Valves: Valve Ref.	Housing Ref.	Coil Ref.	Power AC W	Power DC W	Coil Group	Dwg. No.
-	6	800	1	10	10	-10	75	FKM	**E341L02**	**2995**	**481865**	8	9	2.1/3.0	3513
	6	800	1	10	10	-10	75	FKM	**E341L02**	**4270**	**481000**	8	8	2.1/3.0	3513

For this page	Port size	Orifice (mm)	Qn (l/min)	MOPD (bar)	Fluid Temp (°C)	Amb Temp (°C)
From	1/4"	6	800	10	-10	-10
To	1/4"	8	1400	10	100	50

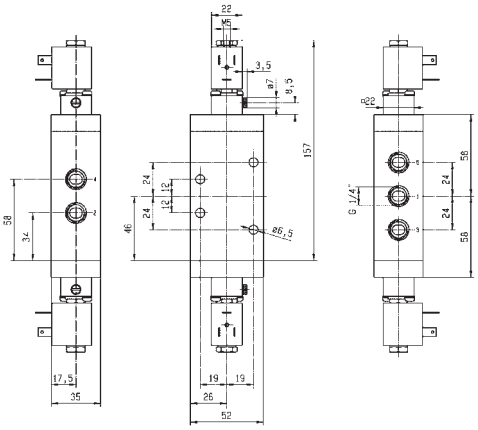

Drawing 3461

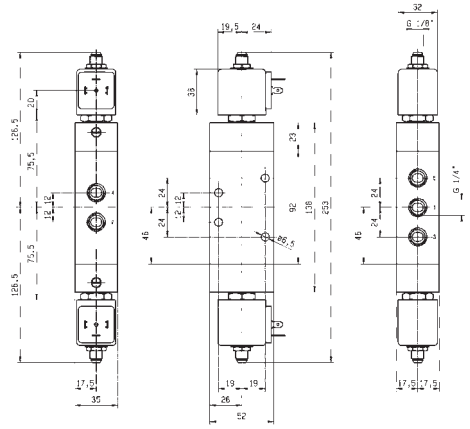

Drawing 3541

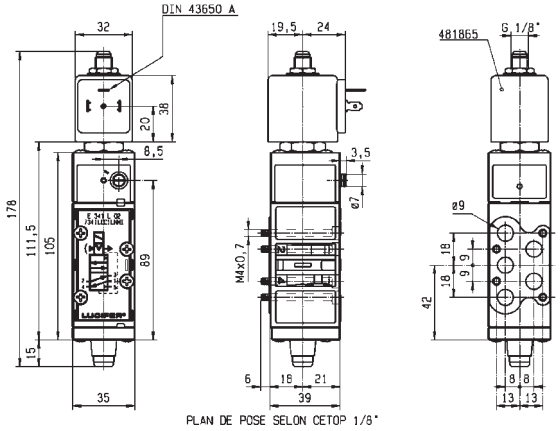

Drawing 3513

5/2 5 WAY PNEUMATIC DISTRIBUTORS (PIPE MOUNTING/SUB-BASE MOUNTING)

PILOT OPERATED

POM

CETOP

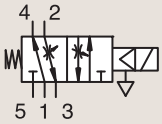

NORMALLY CLOSED

Port size BSP	Orifice Ø 1 mm	Flow factor Qn l/min	Operating Pressure Differential Min bar	Max (MOPD) AC bar	Max (MOPD) DC bar	Fluid Temp. Min °C	Fluid Temp. Max °C	Seat Seal	Parker LUCIFER® Valves: Valve Ref.	Housing Ref.	Coil Ref.	Power AC W	Power DC W	Coil Group	Dwg. No.
-	8	800	1	10	10	-10	75	FKM	341L04 [1]	-	482605	4	5	1.1	3437
	8	800	1	10	10	-10	75	FKM	341L04 [1]	-	482606	2	2.5	1.1	3437
	8	800	1	10	10	-10	75	FKM	341L04 [1]	8993	488980	2	2.5	1.1	3437
	8	800	1	10	10	-10	75	FKM	341L04 [1]	8993	495865	2	2.5	1.1	3437
1/8"	6	800	1	-	10	-10	75	NBR	341L0197	2995	482740	-	1.6	6.0/8.0	8021
	6	800	1	10	10	-10	75	NBR	341L0197	-	495900	2.5	2	6.0/8.0	8021
	6	800	1	-	10	-10	75	NBR	341L0197	-	495910	-	0.3 to 3	6.0/8.0	8021
	6	800	1	-	10	-10	75	NBR	341L0197	2995	496125	-	1.6	6.0/8.0	8021
	6	800	1	10	10	-10	75	NBR	341L05 [2]	-	482605	4	5	1.1	3430
	6	800	1	10	10	-10	75	NBR	341L05 [2]	-	482606	2	2.5	1.1	3430
	6	800	1	10	10	-10	75	NBR	341L05 [2]	8993	488980	2	2.5	1.1	3430
	6	800	1	10	10	-10	75	NBR	341L05 [2]	8993	495865	2	2.5	1.1	3430
	6	800	1	10	-	-10	75	FKM	E341L01 [1]	2995	482722	10	-	2.1/3.0	3255
	6	800	1	10	10	-10	75	FKM	E341L01 [1]	-	483371	8	8	2.1/3.0	3255
	6	800	1	10	10	-10	75	FKM	E341L01 [1]	2995.33	491514	11	12	2.1/3.0	3255

Notes:

1. Manual override and flow regulating screws standard
2. With manual override

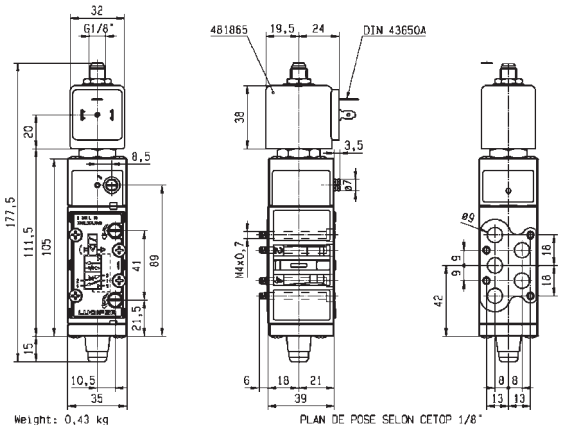

Drawing 3255

For this page	Port size	Orifice (mm)	Qn (l/min)	MOPD (bar)	Fluid Temp (°C)	Amb Temp (°C)
From	1/8"	6	800	10	-10	-20
To	1/8"	8	800	10	75	50

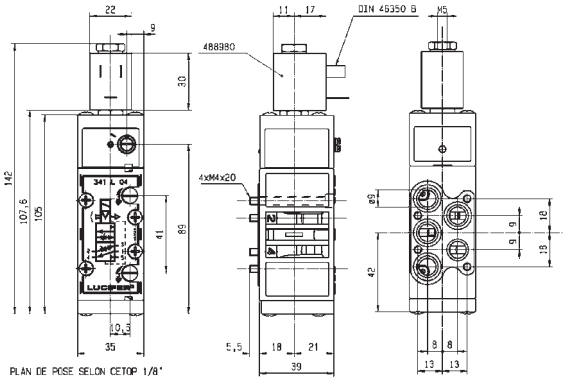

Drawing 3437

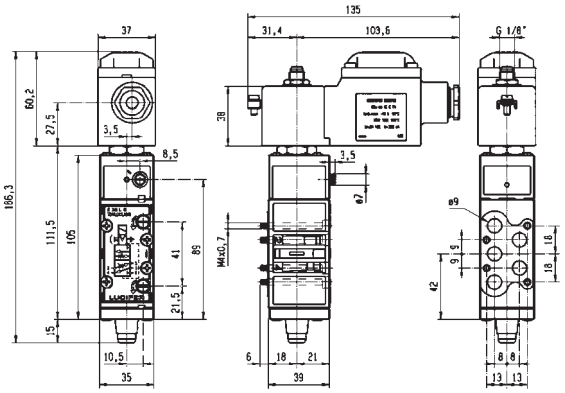

Drawing 8021

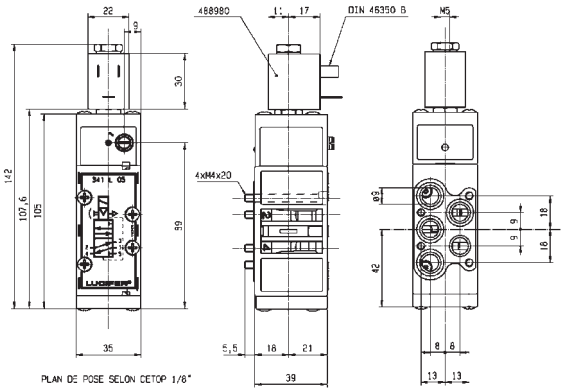

Drawing 3430

5/2

5 WAY PNEUMATIC DISTRIBUTORS (PIPE MOUNTING/SUB-BASE MOUNTING)

PILOT OPERATED

POM

CETOP

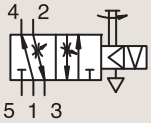

CONTROL BY ELECTRIC IMPULSE

Port size	Orifice Ø	Flow factor	Operating Pressure Differential			Fluid Temp.		Seat Seal	Parker LUCIFER® Valves			Power		Coil Group	Dwg. No.
	1		Min	Max (MOPD)		Min	Max		Valve Ref.	Housing Ref.	Coil Ref.				
BSP	mm	Qn l/min	bar	AC bar	DC bar	°C	°C					AC W	DC W		
1/8"	6	800	1	-	10	-10	75	FKM	345L01 [1]	4269	485400	-	13	4.0	3255

Notes:

1. Manual override and flow regulating screws standard

For this page	Port size	Orifice (mm)	Qn (l/min)	MOPD (bar)	Fluid Temp (°C)	Amb Temp (°C)
From	1/8"	6	800	10	-10	-10
To	1/8"	6	800	10	75	50

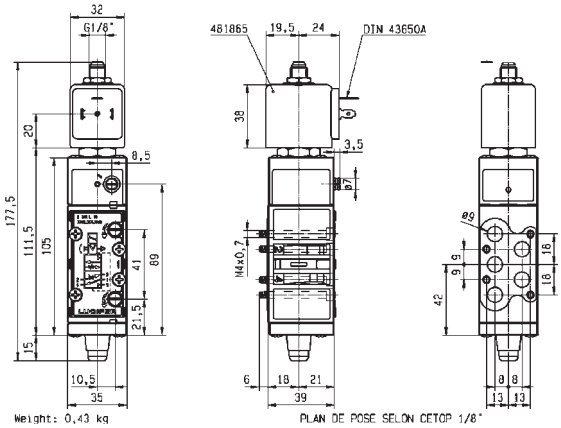

Drawing 3255

5/2

5 WAY PNEUMATIC DISTRIBUTORS (PIPE MOUNTING/SUB-BASE MOUNTING)

EXTERNALLY OPERATED

Process

Industrial Equipment

POM

SUB-BASE MOUNTING

NORMALLY CLOSED

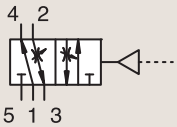

Port size	Orifice Ø 1 mm	Flow factor Qn l/min	Operating Pressure Differential Min bar	Max (MOPD) AC bar	Max (MOPD) DC bar	Fluid Temp. Min °C	Fluid Temp. Max °C	Seat Seal	Parker LUCIFER® Valves: Valve Ref.	Housing Ref.	Coil Ref.	Power AC W	Power DC W	Coil Group	Dwg. No.
SB	7	800	1	10	10	-10	75	FKM/ NBR	541L01	-	-	-	-	-	3254

For this page	Port size	Orifice (mm)	Qn (l/min)	MOPD (bar)	Fluid Temp (°C)	Amb Temp (°C)
From	1/8"	7	800	10	-10	-10
To	1/8"	7	800	10	75	50

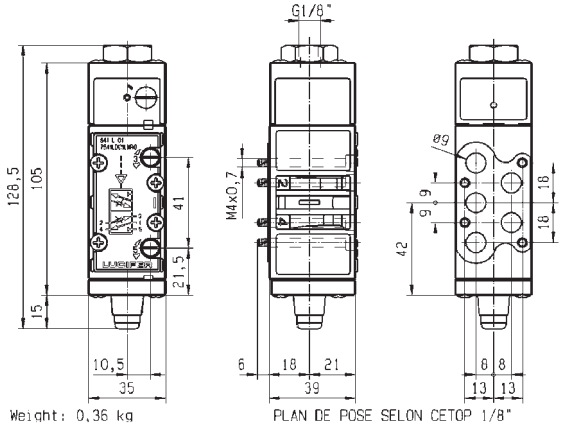

Drawing 3254

3 & 5 WAY PNEUMATIC VALVES FOR ACTUATOR CONTROL (PIPE MOUNTING)

3/2
5/2

Actuation	Body	Function	Port Size	Orifice (mm)	Qn (l/min)	MOPD (bar)	Max Fluid Temp. (°C)	Page Parker Valves	Page Parker LUCIFER® Valves
Direct Operated	Brass/Pipe mounting	Normally Closed	1/8''	1.2 to 1.5	70	10	75	-	302
			1/8''-1/4''	2.5	220	7	75	-	302
			1/4''	1 to 4.5	500	16	120	-	302
		Normally Open	1/4''	2.5	220	7	75	-	308
		Universal	1/4''	6	680	10	75	-	308
		Control by Electric Impulse	1/4''	2.5	220	7	100	-	310
	Brass/Sub-base mounting	Normally Closed	5 mm	2.5	180	2	75	-	312
		Universal	1/8''	2	140	7	120	-	312
	Anodized aluminium/ Pipe mounting	Universal	1/4''	6	680	10	80	-	314
Pilot Operated	Anodized aluminium/ Pipe mounting/Spool	Normally Closed	1/8''	4 to 15	600	10	80	-	316
			1/4''	7 to 8	1400	10	80	-	318
			1/2''	12	3000	10	50	-	322
		Dual Solenoids	1/8''	4	400	10	80	-	324
			1/4''	7 to 8	1400	10	80	-	326
			1/2''	12	3000	10	50	-	328
		Control by Electric Impulse	1/8''	4	600	10	80	-	328
Manual Reset	Brass/Pipe mounting	Universal	1/4''	6	680	10	65	-	330

3/2 3 & 5 WAY PNEUMATIC VALVES FOR ACTUATOR CONTROL (PIPE MOUNTING)

DIRECT OPERATED

Commercial Equipment

Industrial Equipment

Process

BRASS
PIPE MOUNTING
NORMALLY CLOSED

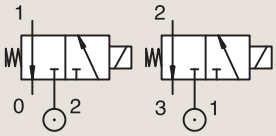

Port size BSP	Orifice Ø 1 mm	Flow factor Qn l/min	Operating Pressure Differential Min bar	Max (MOPD) AC bar	Max (MOPD) DC bar	Fluid Temp. Min °C	Fluid Temp. Max °C	Seat Seal	Parker LUCIFER® Valves Valve Ref.	Housing Ref.	Coil Ref.	ATEX Zone	Protection Mode	Power AC W	Power DC W	Coil Group	Dwg. No.
1/8"	1.2	50	0	10	10	-10	75	FKM	**131M15**	**8993**	**488980**	-	-	2	2.5	1.1	3382
	1.5	70	0	7	7	-10	75	FKM	**131M14**	**8993**	**488980**	-	-	2	2.5	1.1	3382
1/8"-1/4"	2.5	220	0	7	7	-40	75	PUR	**E131K0358** [1]	**2995**	**481865**	-	-	8	9	2.1	3510
	2.5	220	0	7	7	-40	75	PUR	**E131K0358** [1]	**4270**	**481000**	-	-	8	8	2.1	3510
1/4"	1	36	0	-	10	-10	55	FKM	**131K0490**	**2995**	**483580.01**	0-20	Ex ia IIC T6	-	0.5 to 3	7.0/8.0	7058
	1	36	0	-	10	-10	75	FKM	**131K0490**	**-**	**488660.01**	0-20	Ex ia IIC T6	-	0.3 to 3	7.0/8.0	7058
	1	36	0	-	10	-10	75	FKM	**131K0490**	**-**	**495910**	0-20	Ex ia IIC T4 to T6	-	0.3 to 3	7.0/8.0	7058

Notes:

1. With manual override

For this page	Port size	Orifice (mm)	Qn (l/min)	MOPD (bar)	Fluid Temp (°C)	Amb Temp (°C)
From	1/8"	1	36	7	-40	-40
To	1/4"	2.5	220	10	75	50

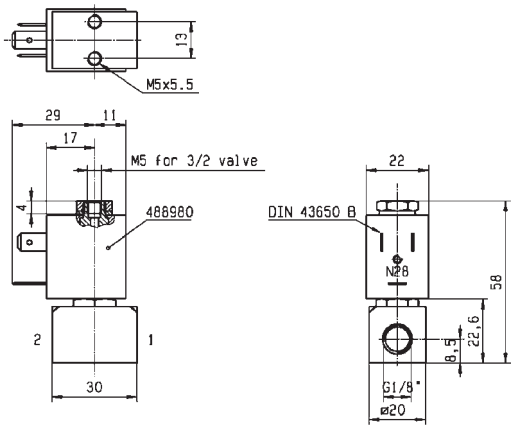

Drawing 3382

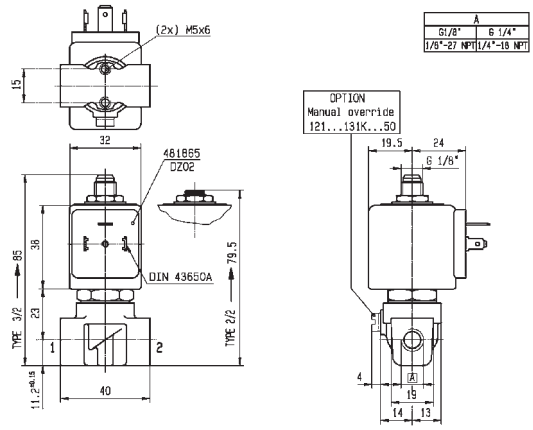

Drawing 3510

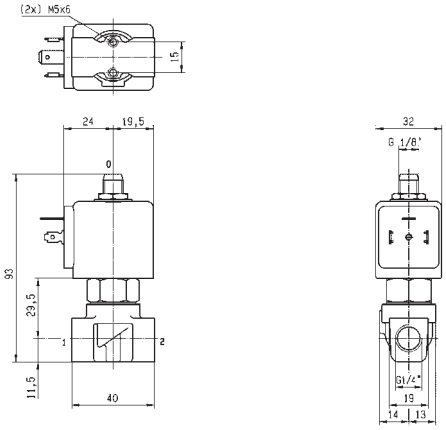

Drawing 7058

3/2

3 & 5 WAY PNEUMATIC VALVES FOR ACTUATOR CONTROL (PIPE MOUNTING)

DIRECT OPERATED

BRASS

PIPE MOUNTING

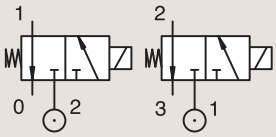

NORMALLY CLOSED

Port size BSP	Orifice Ø 1 mm	Flow factor Qn l/min	Operating Pressure Differential Min bar	Max (MOPD) AC bar	Max (MOPD) DC bar	Fluid Temp. Min °C	Fluid Temp. Max °C	Seat Seal	Parker LUCIFER® Valves Valve Ref.	Housing Ref.	Coil Ref.	ATEX Zone	Protection Mode	Power AC W	Power DC W	Coil Group	Dwg. No.
1/4"	1.5	80	0	-	7	-20	75	PUR	**131K0497**	**2995**	**482740**	-	-	-	1.6	6.0/8.0	8023
	1.5	80	0	7	7	-20	75	PUR	**131K0497**	**-**	**495900**	1-21	Ex db mb IIC T4 to T6	2.5	2	6.0/8.0	8023
	1.5	80	0	-	7	-20	75	PUR	**131K0497**	**-**	**495910**	0-20	Ex ia IIC T4 to T6	-	0.3 to 3	6.0/8.0	8023
	1.5	80	0	-	7	-20	75	PUR	**131K0497**	**2995**	**496125**	2-22	Ex nAc nCc IIC T5/T6	-	1.6	6.0/8.0	8023
	1.5	80	0	16	16	-10	100	FKM	**E131K04**	**2995**	**481865**	-	-	8	9	2.0	3510
	1.5	80	0	16	16	-10	120	FKM	**E131K04**	**4270**	**481000**	-	-	8	8	2.0	3510
	1.5	80	0	16	16	-10	120	FKM	**E131K04**	**4270**	**486265**	-	-	14	14	2.0	3510
	1.5	80	0	15	15	-10	100	FKM	**E131K0450** [1]	**2995**	**481865**	-	-	8	9	2.1	3510
	1.5	80	0	15	15	-10	120	FKM	**E131K0450** [1]	**4270**	**481000**	-	-	8	8	2.1	3510
	2	140	0	10	10	-10	100	FKM	**E131K06**	**2995**	**481865**	-	-	8	9	2.0	8119
	2	140	0	10	10	-10	120	FKM	**E131K06**	**4270**	**481000**	-	-	8	8	2.0	8119
	2	140	0	10	10	-10	120	FKM	**E131K06**	**4270**	**486265**	-	-	14	14	2.0	8119
	2	140	0	10	10	-10	100	FKM	**E131K0650** [1]	**2995**	**481865**	-	-	8	9	2.1	3510
	2	140	0	10	10	-10	120	FKM	**E131K0650** [1]	**4270**	**481000**	-	-	8	8	2.1	3510

Notes:

1. With manual override

For this page	Port size	Orifice (mm)	Qn (l/min)	MOPD (bar)	Fluid Temp (°C)	Amb Temp (°C)
From	1/4"	1.5	80	7	-20	-20
To	1/4"	2	140	16	120	50

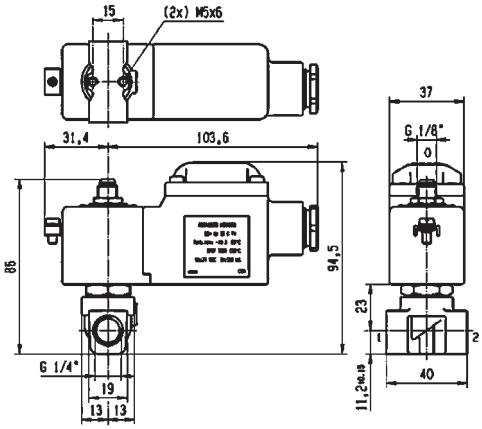

Drawing 8023

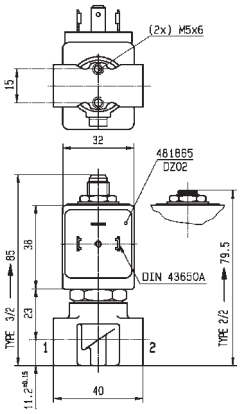

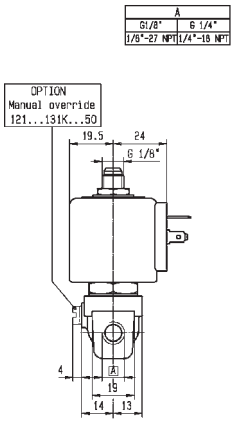

Drawing 3510

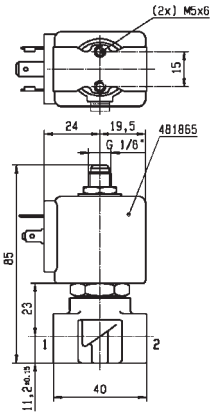

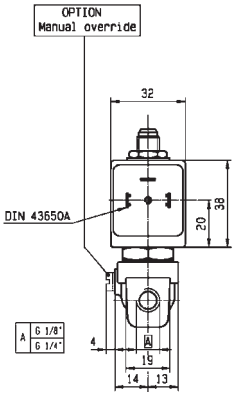

Drawing 8119

3/2

3 & 5 WAY PNEUMATIC VALVES FOR ACTUATOR CONTROL (PIPE MOUNTING)

DIRECT OPERATED

BRASS

PIPE MOUNTING

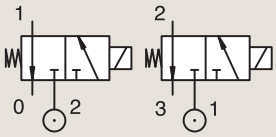

NORMALLY CLOSED

Port size BSP	Orifice Ø 1 mm	Flow factor Qn l/min	Operating Pressure Differential Min bar	Max (MOPD) AC bar	Max (MOPD) DC bar	Fluid Temp. Min °C	Fluid Temp. Max °C	Seat Seal	Parker LUCIFER® Valves Valve Ref.	Housing Ref.	Coil Ref.	ATEX Zone	Protection Mode	Power AC W	Power DC W	Coil Group	Dwg. No.
1/4"	2.5	220	0.1	7	7	-10	75	FKM	**E131E03**	**2995**	**481865**	-	-	8	9	2.0	3525
	2.5	220	0.1	7	7	-10	75	FKM	**E131E03**	**4270**	**481000**	-	-	8	8	2.0	3525
	2.5	220	0.1	7	7	-10	75	FKM	**E131E03**	**4270**	**486265**	-	-	14	14	2.0	3525
	2.5	220	0	7	7	-40	75	PUR	**E131K0308**	**2995**	**481865**	-	-	8	9	2.1	3510
	2.5	220	0	7	7	-40	75	PUR	**E131K0308**	**4270**	**481000**	-	-	8	8	2.1	3510
	2.5	220	0	7	7	-10	100	FKM	**E131K0350** [1]	**2995**	**481865**	-	-	8	9	2.1	3510
	2.5	220	0	7	7	-10	120	FKM	**E131K0350** [1]	**4270**	**481000**	-	-	8	8	2.1	3510
	4.5	500	0	2	2	-10	75	FKM	**131T2101** [1]	**2995**	**481865**	-	-	8	9	2.1	3223
	4.5	500	0	2	2	-10	75	FKM	**131T2101** [1]	**4270**	**481000**	-	-	8	8	2.1	3223

Notes:

1. With manual override

For this page	Port size	Orifice (mm)	Qn (l/min)	MOPD (bar)	Fluid Temp (°C)	Amb Temp (°C)
From	1/4"	2.5	220	2	-40	-40
To	1/4"	4.5	500	7	120	50

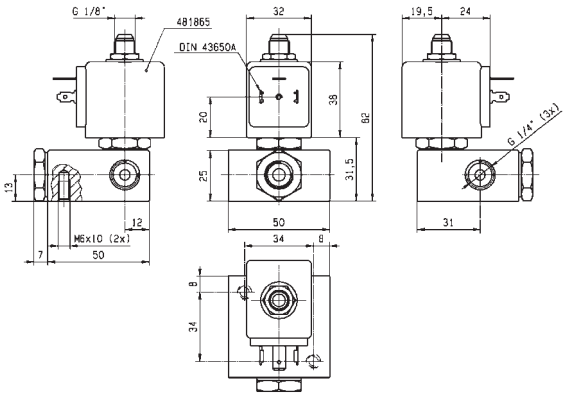

Drawing 3525

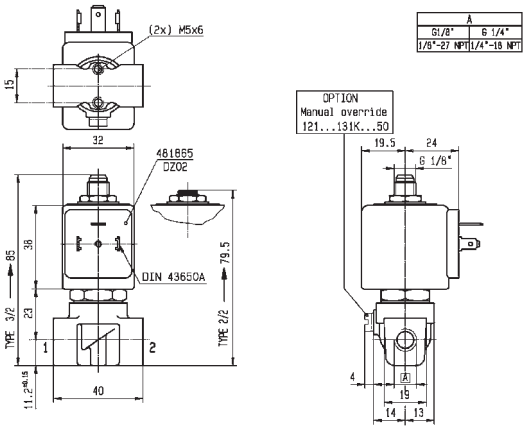

Drawing 3510

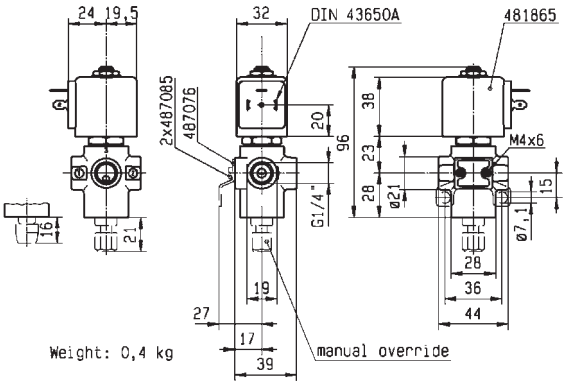

Drawing 3223

3/2 3 & 5 WAY PNEUMATIC VALVES FOR ACTUATOR CONTROL (PIPE MOUNTING)

DIRECT OPERATED

BRASS PIPE MOUNTING

NORMALLY OPEN

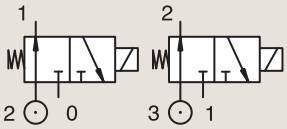

Port size BSP	Orifice Ø 1 mm	Flow factor Qn l/min	Operating Pressure Differential Min bar	Max (MOPD) AC bar	Max (MOPD) DC bar	Fluid Temp. Min °C	Fluid Temp. Max °C	Seat Seal	Parker LUCIFER® Valves Valve Ref.	Housing Ref.	Coil Ref.	ATEX Zone	Protection Mode	Power AC W	Power DC W	Coil Group	Dwg. No.
1/4"	2.5	220	0	7	3.5	-10	75	FKM	**132T29**	**2995**	**481865**	-	-	8	9	2.0	3223
	2.5	220	0	7	3.5	-10	75	FKM	**132T29**	**4270**	**481000**	-	-	8	8	2.0	3223
	2.5	220	0	-	7	-10	75	FKM	**132T29**	**4270**	**486265**	-	-	-	14	2.0	3223

BRASS PIPE MOUNTING

UNIVERSAL

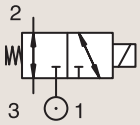

Port size BSP	Orifice Ø 1 mm	Flow factor Qn l/min	Operating Pressure Differential Min bar	Max (MOPD) AC bar	Max (MOPD) DC bar	Fluid Temp. Min °C	Fluid Temp. Max °C	Seat Seal	Parker LUCIFER® Valves Valve Ref.	Housing Ref.	Coil Ref.	ATEX Zone	Protection Mode	Power AC W	Power DC W	Coil Group	Dwg. No.
1/4" NPT	6	680	0	10	10	-25	65	NBR	**U133X0111**	**-**	**492310**	1-21	Ex eb mb II T3 to T6	6	6	9.0/10.1/10.2	7422
	6	680	0	-	10	-25	75	NBR	**U133X0111**	**-**	**492965.01**	0-20	Ex ia IIC T6	-	0.3 to 3	9.0/10.1/10.2	7422
	6	680	0	10	10	-25	65	NBR	**U133X01111D**[1]	**-**	**483270**	1-21	Ex db IIC T4 to T6	8	8	11.0	7438

Notes:

1. DC voltage only. Minimum drop off voltage is 15% of nominal voltage (former DIN 19251)

For this page	Port size	Orifice (mm)	Qn (l/min)	MOPD (bar)	Fluid Temp (°C)	Amb Temp (°C)
From	1/4"	2.5	220	3.5	-25	-25
To	1/4"	6	680	10	75	50

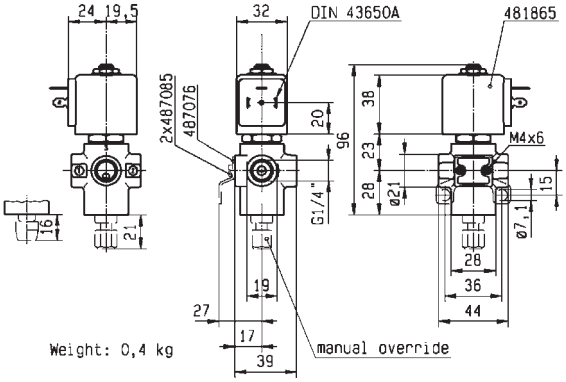

Drawing 3223

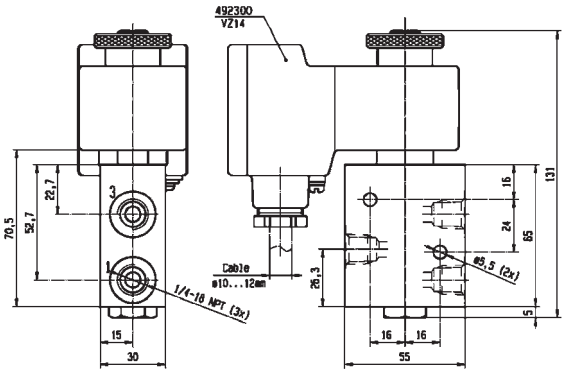

Drawing 7422

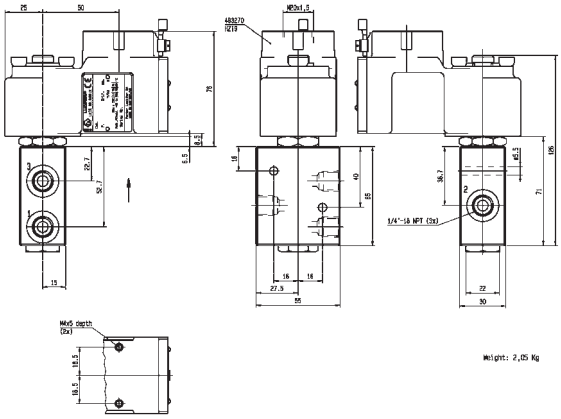

Drawing 7438

3/2

3 & 5 WAY PNEUMATIC VALVES FOR ACTUATOR CONTROL (PIPE MOUNTING)

DIRECT OPERATED

BRASS
PIPE MOUNTING
UNIVERSAL

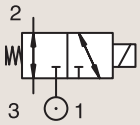

Port size	Orifice Ø 1 mm	Flow factor Qn l/min	Operating Pressure Differential Min bar	Max (MOPD) AC bar	Max (MOPD) DC bar	Fluid Temp. Min °C	Fluid Temp. Max °C	Seat Seal	Parker LUCIFER® Valves Valve Ref.	Housing Ref.	Coil Ref.	ATEX Zone	Protection Mode	Power AC W	Power DC W	Coil Group	Dwg. No.
1/4" NPT	6	680	0	-	10	-25	65	NBR	U133X0131 [1]	-	492310	1-21	Ex eb mb II T3 to T6	-	6	10.1/10.2	8280
	6	680	0	-	10	-25	65	NBR	U133X0131 [1]	-	496700	1-21	Ex db mb IIC T4 to T6	-	6	10.1/10.2	8280

Notes:

1. DC voltage only (or coil with rectifier). Minimum drop off voltage is 15% of nominal voltage (former DIN 19251)

BRASS
PIPE MOUNTING
CONTROL BY ELECTRIC IMPULSE

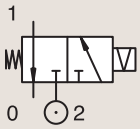

Port size BSP	Orifice Ø 1 mm	Flow factor Qn l/min	Operating Pressure Differential Min bar	Max (MOPD) AC bar	Max (MOPD) DC bar	Fluid Temp. Min °C	Fluid Temp. Max °C	Seat Seal	Parker LUCIFER® Valves Valve Ref.	Housing Ref.	Coil Ref.	ATEX Zone	Protection Mode	Power AC W	Power DC W	Coil Group	Dwg. No.
1/4"	2.5	220	0	-	7	-10	100	FKM	135K03	4269	485400	-	-	-	13	4.0	3510

For this page	Port size	Orifice (mm)	Qn (l/min)	MOPD (bar)	Fluid Temp (°C)	Amb Temp (°C)
From	1/4"	2.5	220	7	-25	-25
To	1/4"	6	680	10	100	50

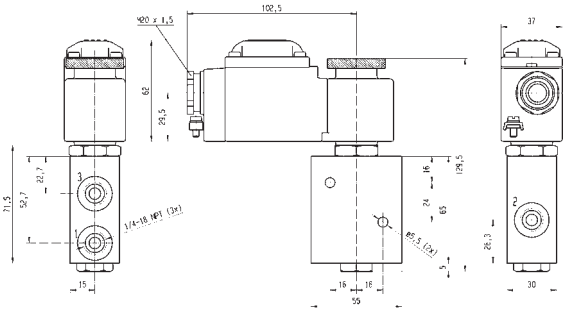

Drawing 8280

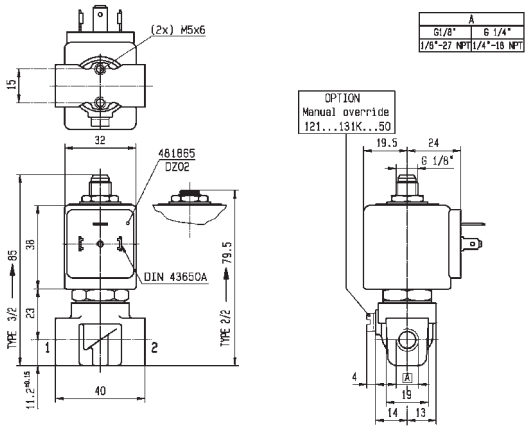

Drawing 3510

3/2 3 & 5 WAY PNEUMATIC VALVES FOR ACTUATOR CONTROL (PIPE MOUNTING)

DIRECT OPERATED

BRASS SUB-BASE MOUNTING

NORMALLY CLOSED

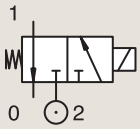

Port size	Orifice Ø 1 mm	Flow factor Qn l/min	Operating Pressure Differential Min bar	Max (MOPD) AC bar	Max (MOPD) DC bar	Fluid Temp. Min °C	Fluid Temp. Max °C	Seat Seal	Parker LUCIFER® Valves Valve Ref.	Housing Ref.	Coil Ref.	ATEX Zone	Protection Mode	Power AC W	Power DC W	Coil Group	Dwg. No.
SB	2.5	180	0	-	2	-20	75	PUR	**131F4397**	**2995**	**482740**	-	-	-	1.6	6.0/8.0	8022
	2.5	180	0	2	2	-20	75	PUR	**131F4397**	**-**	**495900**	1-21	Ex db mb IIC T4 to T6	2.5	2	6.0/8.0	8022
	2.5	180	0	-	2	-20	75	PUR	**131F4397**	**-**	**495910**	0-20	Ex ia IIC T4 to T6	-	0.3 to 3	6.0/8.0	8022
	2.5	180	0	-	2	-20	75	PUR	**131F4397**	**2995**	**496125**	2-22	Ex nAc nCc IIC T5/T6	-	1.6	6.0/8.0	8022

BRASS SUB-BASE MOUNTING

UNIVERSAL

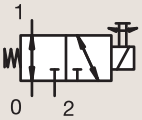

Port size	Orifice Ø 1 mm	Flow factor Qn l/min	Operating Pressure Differential Min bar	Max (MOPD) AC bar	Max (MOPD) DC bar	Fluid Temp. Min °C	Fluid Temp. Max °C	Seat Seal	Parker LUCIFER® Valves Valve Ref.	Housing Ref.	Coil Ref.	ATEX Zone	Protection Mode	Power AC W	Power DC W	Coil Group	Dwg. No.
SB	2	140	0	7	7	-10	100	FKM	**133F4650** [1]	**2995**	**481865**	-	-	8	9	2.1	3509
	2	140	0	7	7	-10	120	FKM	**133F4650** [1]	**4270**	**481000**	-	-	8	8	2.1	3509

Notes:

1. With manual override

For this page	Port size	Orifice (mm)	Qn (l/min)	MOPD (bar)	Fluid Temp (°C)	Amb Temp (°C)
From	1/8"	2	140	2	-20	-20
To	5 mm	2.5	180	7	120	50

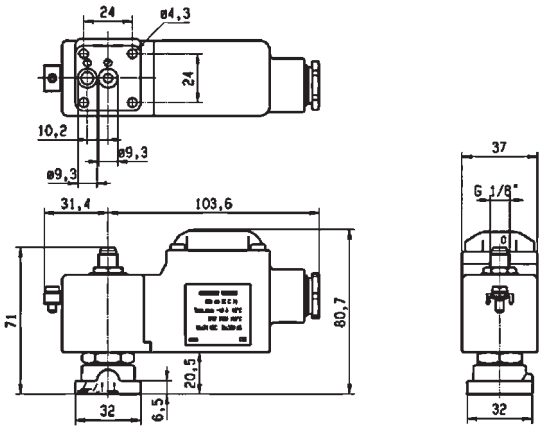

Drawing 8022

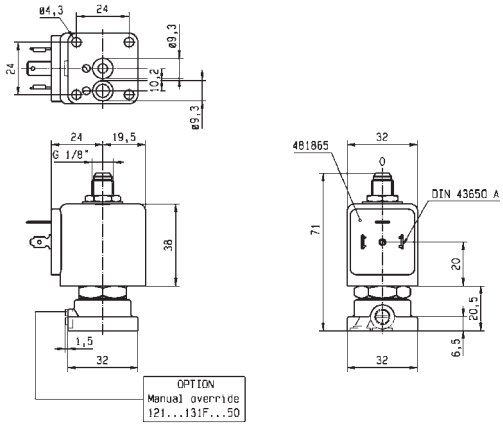

Drawing 3509

3/2

3 & 5 WAY PNEUMATIC VALVES FOR ACTUATOR CONTROL (PIPE MOUNTING)

DIRECT OPERATED

ANODIZED ALUMINIUM PIPE MOUNTING

UNIVERSAL

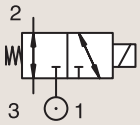

Port size BSP	Orifice Ø 1 mm	Flow factor Qn l/min	Operating Pressure Differential Min bar	Max (MOPD) AC bar	Max (MOPD) DC bar	Fluid Temp. Min °C	Fluid Temp. Max °C	Seat Seal	Parker LUCIFER® Valves Valve Ref.	Housing Ref.	Coil Ref.	ATEX Zone	Protection Mode	Power AC W	Power DC W	Coil Group	Dwg. No.
1/4"	6	680	0	10	10	-25	75	NBR	**133X01**	**-**	**492310**	1-21	Ex eb mb II T3 to T6	6	6	9.0/10.1/10.2	6960
	6	680	0	-	10	-25	65	NBR	**133X01**	**-**	**492965.01**	0-20	Ex ia IIC T6	-	0.3 to 3	9.0/10.1/10.2	6960
	6	680	0	10	10	-25	65	NBR	**133X01**	**-**	**496700**	1-21	Ex db mb IIC T4 to T6	6	6	9.0/10.1/10.2	6960
	6	680	0	10	10	-25	65	NBR	**133X01**	**-**	**496895**	-	-	8	8	9.0/10.1/10.2	6960
	6	680	0	10	10	-25	80	FKM	**133X01001D**	**-**	**483270**	1-21	Ex db IIC T4 to T6	8	8	11.0	7031
1/4" NPT	6	680	0	10	10	-25	65	NBR	**U133X01**	**-**	**496700**	1-21	Ex db mb IIC T4 to T6	6	6	9.0/10.1/10.2	7422

For this page	Port size	Orifice (mm)	Qn (l/min)	MOPD (bar)	Fluid Temp (°C)	Amb Temp (°C)
From	1/4''	6	680	10	-25	-25
To	1/4''	6	680	10	80	50

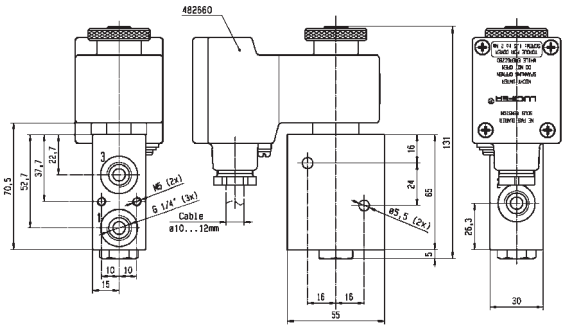

Drawing 6960

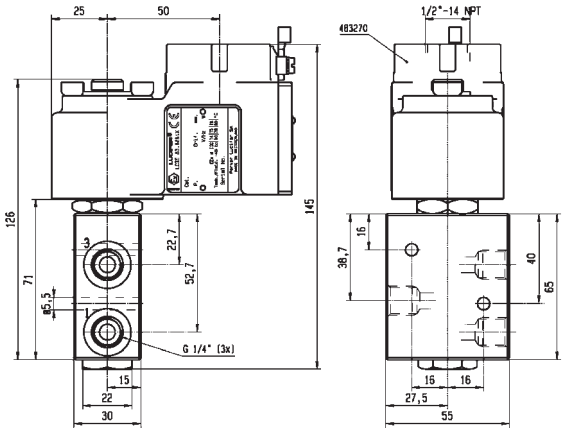

Drawing 7031

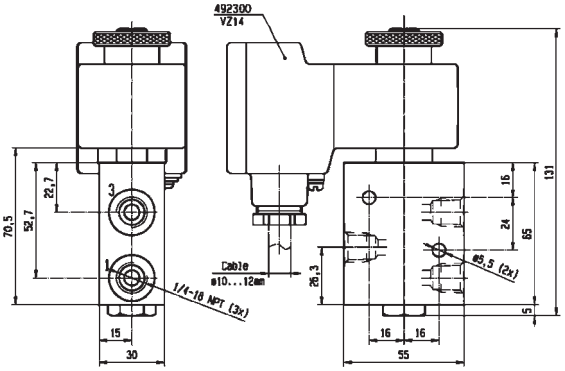

Drawing 7422

5/2 3 & 5 WAY PNEUMATIC VALVES FOR ACTUATOR CONTROL (PIPE MOUNTING)

PILOT OPERATED

ANODIZED ALUMINIUM PIPE MOUNTING

NORMALLY CLOSED

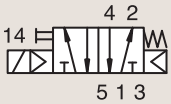

Port size BSP	Orifice Ø 1 mm	Flow factor Qn l/min	Operating Pressure Differential Min bar	Max (MOPD) AC bar	Max (MOPD) DC bar	Fluid Temp. Min °C	Fluid Temp. Max °C	Seat Seal	Parker LUCIFER® Valves Valve Ref.	Housing Ref.	Coil Ref.	ATEX Zone	Protection Mode	Power AC W	Power DC W	Coil Group	Dwg. No.
1/8"	4	600	2	10	10	-25	50	NBR	**341P01** [2]	**-**	**482606**	1-21	Ex mb IIC T4/T5	2	2.5	1.1	7302
	4	600	2	10	10	-25	80	NBR	**341P01** [2]	**8993**	**488980**	-	-	2	2.5	1.1	7302
	4	600	2	10	10	-25	80	NBR	**341P21** [12]	**2995**	**481865**	-	-	8	9	2.1	7296
	4	600	2	10	10	-25	80	NBR	**341P21** [12]	**4270**	**481000**	-	-	8	8	2.1	7296
	4	600	2	10	10	-40	65	PUR	**341P2108** [2]	**2995**	**481865**	-	-	8	9	2.1	7296
	4	600	2	10	10	-40	65	PUR	**341P2108** [2]	**4270**	**481000**	-	-	8	8	2.1	7296
	4	600	2	-	10	-20	65	NBR/ PUR	**341P2197** [2]	**2995**	**482740**	-	-	-	1.6	6.0/8.0	8027
	4	600	2	10	10	-20	65	NBR/ PUR	**341P2197** [2]	**-**	**495900**	1-21	Ex db mb IIC T4 to T6	2.5	2	6.0/8.0	8027
	4	600	2	-	10	-20	65	NBR/ PUR	**341P2197** [2]	**-**	**495910**	0-20	Ex ia IIC T4 to T6	-	0.3 to 3	6.0/8.0	8027
	4	600	2	-	10	-20	65	NBR/ PUR	**341P2197** [2]	**2995**	**496125**	2-22	Ex nAc nCc IIC T5/T6	-	1.6	6.0/8.0	8027

Notes:

1. Pilot seat in FKM
2. With manual override

For this page	Port size	Orifice (mm)	Qn (l/min)	MOPD (bar)	Fluid Temp (°C)	Amb Temp (°C)
From	1/8"	4	600	10	-40	-40
To	1/8"	4	600	10	80	50

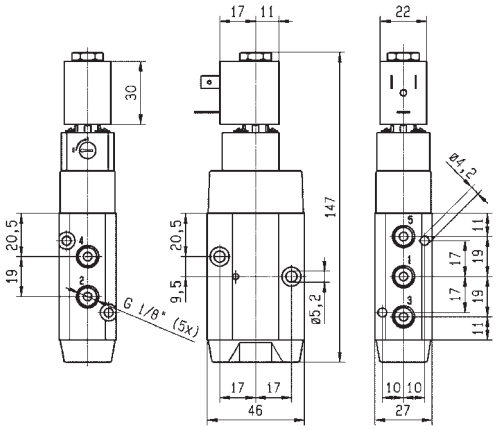

Drawing 7302

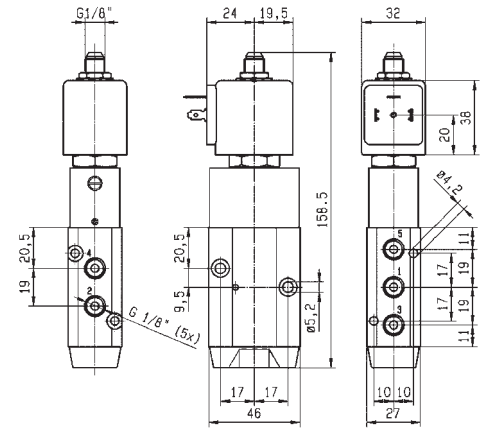

Drawing 7296

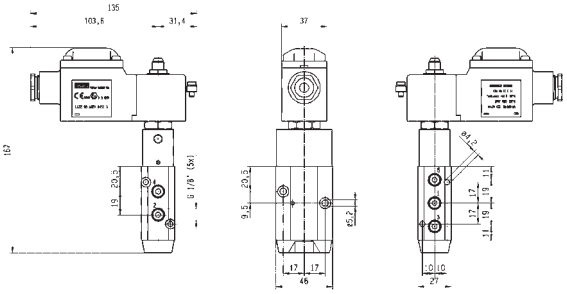

Drawing 8027

5/2

3 & 5 WAY PNEUMATIC VALVES FOR ACTUATOR CONTROL (PIPE MOUNTING)

PILOT OPERATED

ANODIZED ALUMINIUM PIPE MOUNTING

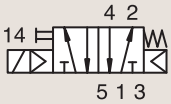

NORMALLY CLOSED

Port size BSP	Orifice Ø 1 mm	Flow factor Qn l/min	Operating Pressure Differential Min bar	Max (MOPD) AC bar	Max (MOPD) DC bar	Fluid Temp. Min °C	Fluid Temp. Max °C	Seat Seal	Parker LUCIFER® Valves Valve Ref.	Housing Ref.	Coil Ref.	ATEX Zone	Protection Mode	Power AC W	Power DC W	Coil Group	Dwg. No.
1/8"	15	600	2	-	10	-10	55	NBR	341P2190 [2]	2995	483580.01	0-20	Ex ia IIC T6	-	0.5 to 3	7.0/8.0	7351
	15	600	2	-	10	-10	75	NBR	341P2190 [2]	-	488660.01	0-20	Ex ia IIC T6	-	0.3 to 3	7.0/8.0	7351
	15	600	2	-	10	-10	75	NBR	341P2190 [2]	-	495910	0-20	Ex ia IIC T4 to T6	-	0.3 to 3	7.0/8.0	7351
1/4"	7	1250	2.5	10	10	-10	50	NBR	341P03 [2]	-	496131	-	-	3	3	1.2	8218
	7	1250	2.5	10	10	-10	50	NBR	341P03 [2]	-	496482	-	-	3	3	1.2	8218
	7	1250	2.5	10	10	-10	50	NBR	341P03 [2]	-	496637	22	Ex tc IIIC T95°C	3	3	1.2	8218
	7	1250	2.5	10	10	-10	50	NBR	341P33 [2]	2995	481865	-	-	8	9	2.1	8219
	7	1250	2.5	10	10	-10	50	NBR	341P33 [2]	2995	495870	2-22	Ex nAc nCc IIC T3/T4	8	9	2.1	8219
	7	1250	2.5	10	10	-10	50	NBR	341P33 [2]	-	495905	1-21	Ex db mb IIC T4	8	8	2.1	8219
	8	1400	2	10	10	-25	80	NBR	341P02 [2]	-	482606	1-21	Ex mb IIC T4/T5	2	2.5	1.1	7314
	8	1400	2	10	10	-25	80	NBR	341P02 [2]	8993	488980	-	-	2	2.5	1.1	7314

Notes:

1. Pilot seat in FKM
2. With manual override

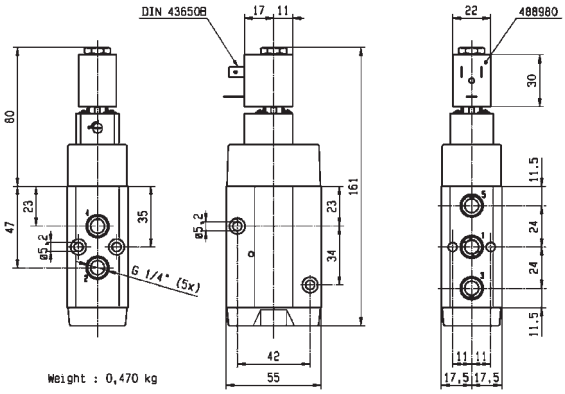

Drawing 7314

For this page	Port size	Orifice (mm)	Qn (l/min)	MOPD (bar)	Fluid Temp (°C)	Amb Temp (°C)
From	1/8"	7	600	10	-25	-25
To	1/4"	15	1400	10	80	50

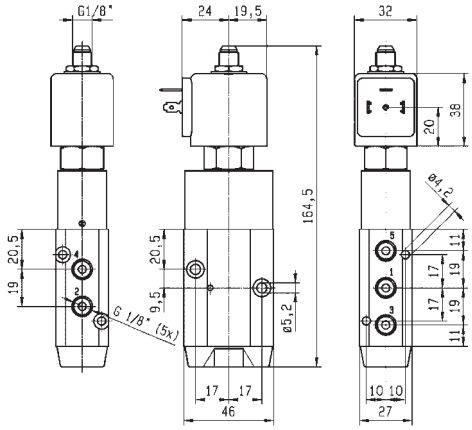

Drawing 7351

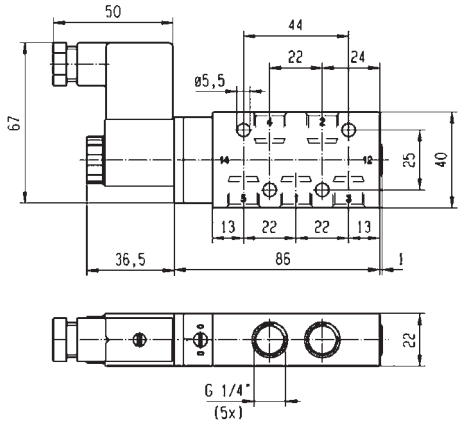

Drawing 8218

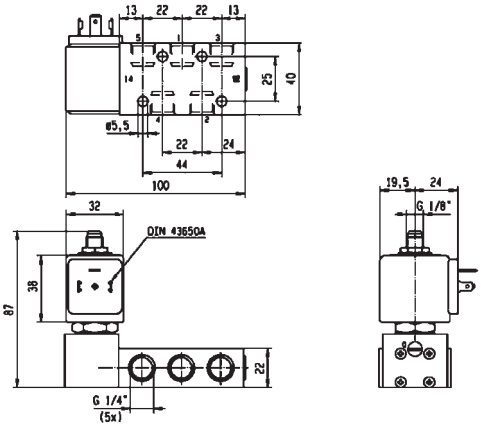

Drawing 8219

5/2 3 & 5 WAY PNEUMATIC VALVES FOR ACTUATOR CONTROL (PIPE MOUNTING)

PILOT OPERATED

ANODIZED ALUMINIUM PIPE MOUNTING

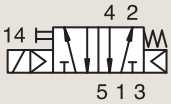

NORMALLY CLOSED

Port size BSP	Orifice Ø 1 mm	Flow factor Qn l/min	Operating Pressure Differential Min bar	Max (MOPD) AC bar	Max (MOPD) DC bar	Fluid Temp. Min °C	Fluid Temp. Max °C	Seat Seal	Parker LUCIFER® Valves Valve Ref.	Housing Ref.	Coil Ref.	ATEX Zone	Protection Mode	Power AC W	Power DC W	Coil Group	Dwg. No.
	8	1400	2	10	10	-25	80	NBR	**341P22 12**	**2995**	**481865**	-	-	8	9	2.1	7319
	8	1400	2	10	10	-25	80	NBR	**341P22 12**	**4270**	**481000**	-	-	8	8	2.1	7319
	8	1400	2	-	10	-25	55	NBR	**341P2290**	**2995**	**483580.01**	0-20	Ex ia IIC T6	-	0.5 to 3	7.0/8.0	7352
	8	1400	2	-	10	-25	75	NBR	**341P2290**	**-**	**488660.01**	0-20	Ex ia IIC T6	-	0.3 to 3	7.0/8.0	7352
1/4"	8	1400	2	-	10	-25	75	NBR	**341P2290**	**-**	**495910**	0-20	Ex ia IIC T4 to T6	-	0.3 to 3	7.0/8.0	7352
	8	1400	2	-	10	-20	80	NBR	**341P2297 23**	**2995**	**482740**	-	-	-	1.6	6.0/8.0	8030
	8	1400	2	10	10	-20	80	NBR	**341P2297 23**	**-**	**495900**	1-21	Ex db mb IIC T4 to T6	2.5	2	6.0/8.0	8030
	8	1400	2	-	10	-20	80	NBR	**341P2297 23**	**-**	**495910**	0-20	Ex ia IIC T4 to T6	-	0.3 to 3	6.0/8.0	8030
	8	1400	2	-	10	-20	80	NBR	**341P2297 23**	**2995**	**496125**	2-22	Ex nAc nCc IIC T5/T6	-	1.6	6.0/8.0	8030

Notes:

1. Pilot seat in FKM
2. With manual override
3. Pilot seat in PUR

For this page	Port size	Orifice (mm)	Qn (l/min)	MOPD (bar)	Fluid Temp (°C)	Amb Temp (°C)
From	1/4"	8	1400	10	-25	-25
To	1/4"	8	1400	10	80	50

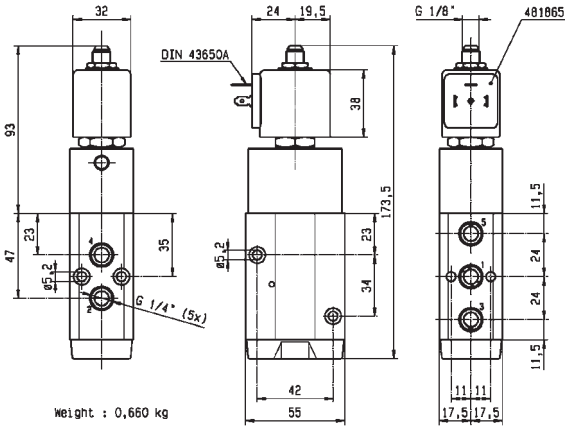

Drawing 7319

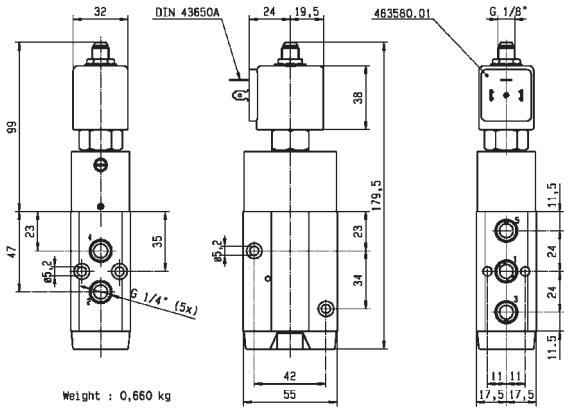

Drawing 7352

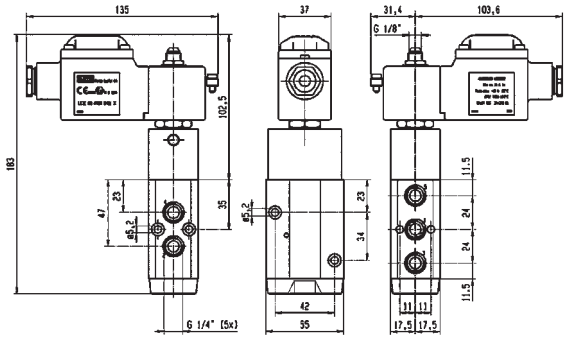

Drawing 8030

5/2 3 & 5 WAY PNEUMATIC VALVES FOR ACTUATOR CONTROL (PIPE MOUNTING)

PILOT OPERATED

ANODIZED ALUMINIUM PIPE MOUNTING

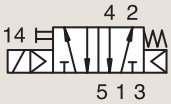

NORMALLY CLOSED

Port size	Orifice Ø	Flow factor	Operating Pressure Differential			Fluid Temp.		Seat Seal	Parker LUCIFER® Valves			ATEX Zone	Protection Mode	Power		Coil Group	Dwg. No.
	1		Min	Max (MOPD)		Min	Max		Valve Ref.	Housing Ref.	Coil Ref.						
BSP	mm	Qn l/min	bar	AC bar	DC bar	°C	°C							AC W	DC W		
1/2"	12	3000	2.5	10	10	-10	50	NBR	**341P04** [1]	**-**	**496131**	-	-	3	3	1.2	8220
	12	3000	2.5	10	10	-10	50	NBR	**341P04** [1]	**-**	**496482**	-	-	3	3	1.2	8220
	12	3000	2.5	10	10	-10	50	NBR	**341P04** [1]	**-**	**496637**	22	Ex tc IIIC T95°C	3	3	1.2	8220
	12	3000	2.5	10	10	-10	50	NBR	**341P34** [1]	**2995**	**481865**	-	-	8	9	2.1	8221
	12	3000	2.5	10	10	-10	50	NBR	**341P34** [1]	**2995**	**495870**	2-22	Ex nAc nCc IIC T3/T4	8	9	2.1	8221
	12	3000	2.5	10	10	-10	50	NBR	**341P34** [1]	**-**	**495905**	1-21	Ex db mb IIC T4	8	8	2.1	8221

Notes:

1. With manual override

For this page	Port size	Orifice (mm)	Qn (l/min)	MOPD (bar)	Fluid Temp (°C)	Amb Temp (°C)
From	1/2"	12	3000	10	-10	-10
To	1/2"	12	3000	10	50	50

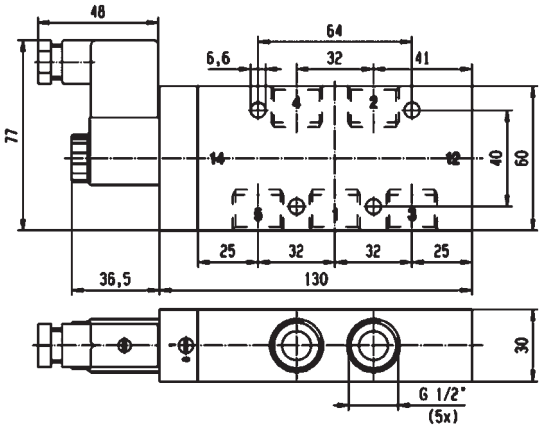

Drawing 8220

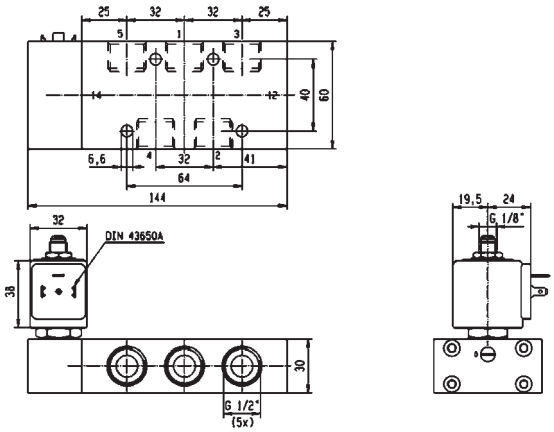

Drawing 8221

5/2

3 & 5 WAY PNEUMATIC VALVES FOR ACTUATOR CONTROL (PIPE MOUNTING)

PILOT OPERATED

ANODIZED ALUMINIUM PIPE MOUNTING

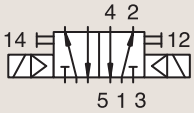

DUAL SOLENOIDS

Port size BSP	Orifice Ø 1 mm	Flow factor Qn l/min	Operating Pressure Differential Min bar	Max (MOPD) AC bar	Max (MOPD) DC bar	Fluid Temp. Min °C	Fluid Temp. Max °C	Seat Seal	Parker LUCIFER® Valves Valve Ref.	Housing Ref.	Coil Ref.	ATEX Zone	Protection Mode	Power AC W	Power DC W	Coil Group	Dwg. No.
1/8"	4	400	2	10	10	-25	80	NBR	347P01 [2]	-	482606	1-21	Ex mb IIC T4/T5	2	2.5	1.1	7306
	4	400	2	10	10	-25	80	NBR	347P01 [2]	8993	488980	-	-	2	2.5	1.1	7306
	4	400	2	10	10	-25	80	NBR	347P21 [12]	2995	481865	-	-	8	9	2.1	7298
	4	400	2	10	10	-25	80	NBR	347P21 [12]	4270	481000	-	-	8	8	2.1	7298
	4	400	2	-	10	-25	55	NBR	347P2190	2995	483580.01	0-20	Ex ia IIC T6	-	0.5 to 3	7.0/8.0	7353
	4	400	2	-	10	-25	75	NBR	347P2190	-	488660.01	0-20	Ex ia IIC T6	-	0.3 to 3	7.0/8.0	7353
	4	400	2	-	10	-25	75	NBR	347P2190	-	495910	0-20	Ex ia IIC T4 to T6	-	0.3 to 3	7.0/8.0	7353
	4	400	2	-	10	-20	65	NBR/ PUR	347P2197 [2]	2995	482740	-	-	-	1.6	6.0/8.0	8028
	4	400	2	10	10	-20	65	NBR/ PUR	347P2197 [2]	-	495900	1-21	Ex db mb IIC T4 to T6	2.5	2	6.0/8.0	8028
	4	400	2	-	10	-20	65	NBR/ PUR	347P2197 [2]	-	495910	0-20	Ex ia IIC T4 to T6	-	0.3 to 3	6.0/8.0	8028
	4	400	2	-	10	-20	65	NBR/ PUR	347P2197 [2]	2995	496125	2-22	Ex nAc nCc IIC T5/T6	-	1.6	6.0/8.0	8028

Notes:

1. Pilot seat in FKM
2. With manual override

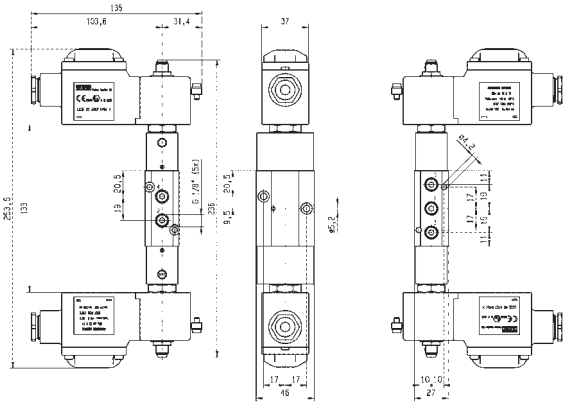

Drawing 8028

For this page	Port size	Orifice (mm)	Qn (l/min)	MOPD (bar)	Fluid Temp (°C)	Amb Temp (°C)
From	1/8"	4	400	10	-25	-25
To	1/8"	4	400	10	80	50

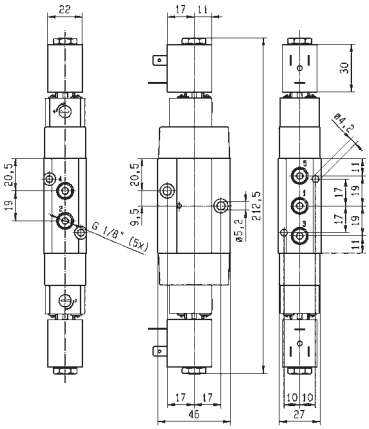

Drawing 7306

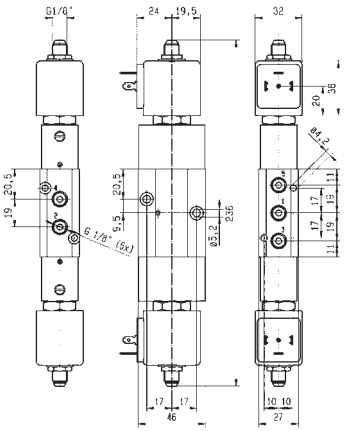

Drawing 7298

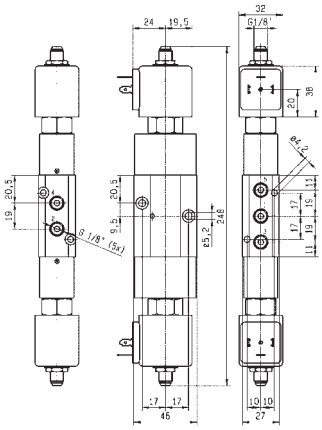

Drawing 7353

5/2 3 & 5 WAY PNEUMATIC VALVES FOR ACTUATOR CONTROL (PIPE MOUNTING)

PILOT OPERATED

ANODIZED ALUMINIUM PIPE MOUNTING

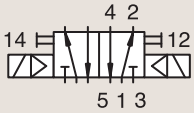

DUAL SOLENOIDS

Port size BSP	Orifice Ø 1 mm	Flow factor Qn l/min	Operating Pressure Differential Min bar	Max (MOPD) AC bar	Max (MOPD) DC bar	Fluid Temp. Min °C	Fluid Temp. Max °C	Seat Seal	Parker LUCIFER® Valves Valve Ref.	Housing Ref.	Coil Ref.	ATEX Zone	Protection Mode	Power AC W	Power DC W	Coil Group	Dwg. No.
1/4"	7	1250	2.5	10	10	-10	50	NBR	347P03 2	-	496131	-	-	3	3	1.2	8222
	7	1250	2.5	10	10	-10	50	NBR	347P03 2	-	496482	-	-	3	3	1.2	8222
	7	1250	2.5	10	10	-10	50	NBR	347P03 2	-	496637	22	Ex tc IIIC T95°C	3	3	1.2	8222
	7	1250	2.5	10	10	-10	50	NBR	347P33 12	2995	481865	-	-	8	9	2.1	8223
	7	1250	2.5	10	10	-10	50	NBR	347P33 12	2995	495870	2-22	Ex nAc nCc IIC T3/T4	8	9	2.1	8223
	7	1250	2.5	10	10	-10	50	NBR	347P33 12	-	495905	1-21	Ex db mb IIC T4	8	8	2.1	8223
	8	1400	2	10	10	-25	80	NBR	347P02 2	-	482606	1-21	Ex mb IIC T4/T5	2	2.5	1.1	7316
	8	1400	2	10	10	-25	80	NBR	347P02 2	8993	488980	-	-	2	2.5	1.1	7316
	8	1400	2	10	10	-25	80	NBR	347P22 12	2995	481865	-	-	8	9	2.1	7321
	8	1400	2	10	10	-25	80	NBR	347P22 12	4270	481000	-	-	8	8	2.1	7321

Notes:

1. Pilot seat in FKM
2. With manual override

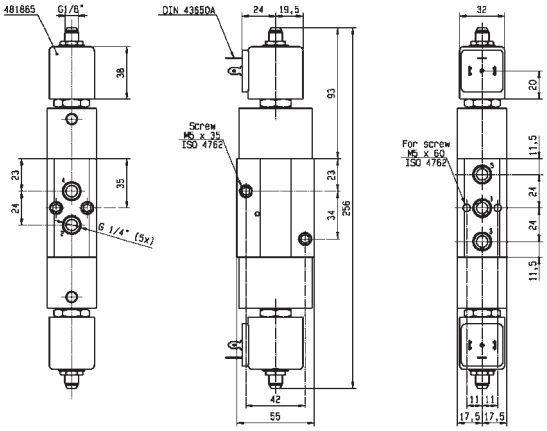

Drawing 7321

For this page	Port size	Orifice (mm)	Qn (l/min)	MOPD (bar)	Fluid Temp (°C)	Amb Temp (°C)
From	1/4"	7	1250	10	-25	-25
To	1/4"	8	1400	10	80	50

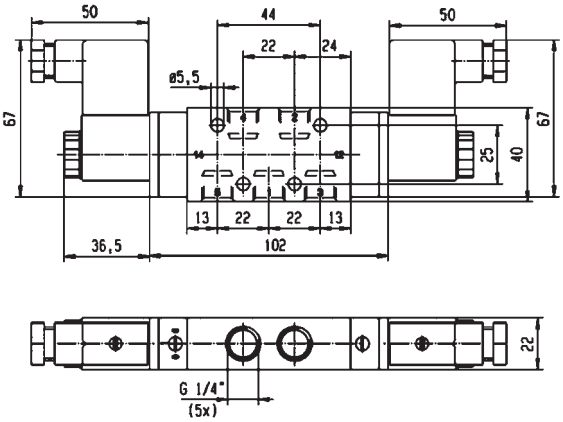

Drawing 8222

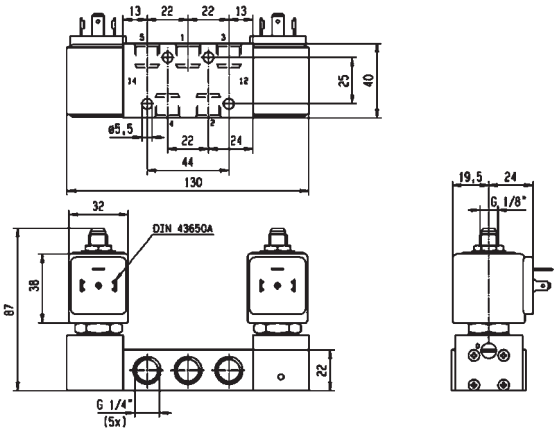

Drawing 8223

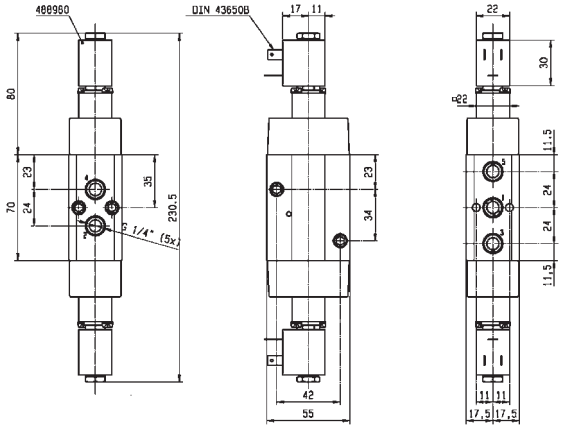

Drawing 7316

5/2 3 & 5 WAY PNEUMATIC VALVES FOR ACTUATOR CONTROL (PIPE MOUNTING)

PILOT OPERATED

ANODIZED ALUMINIUM PIPE MOUNTING

DUAL SOLENOIDS

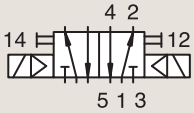

Port size	Orifice Ø 1 mm	Flow factor Qn lmin	Operating Pressure Differential Min bar	Max (MOPD) AC bar	Max (MOPD) DC bar	Fluid Temp. Min °C	Fluid Temp. Max °C	Seat Seal	Parker LUCIFER® Valves Valve Ref.	Housing Ref.	Coil Ref.	ATEX Zone	Protection Mode	Power AC W	Power DC W	Coil Group	Dwg. No.
1/2"	12	3000	2.5	10	10	-10	50	NBR	**347P04** [2]	-	**496131**	-	-	3	3	1.2	8224
	12	3000	2.5	10	10	-10	50	NBR	**347P04** [2]	-	**496482**	-	-	3	3	1.2	8224
	12	3000	2.5	10	10	-10	50	NBR	**347P04** [2]	-	**496637**	22	Ex tc IIIC T95°C	3	3	1.2	8224
	12	3000	2.5	10	10	-10	50	NBR	**347P34** [12]	**2995**	**481865**	-	-	8	9	2.1	8225
	12	3000	2.5	10	10	-10	50	NBR	**347P34** [12]	**2995**	**495870**	2-22	Ex nAc nCc IIC T3/T4	8	9	2.1	8225
	12	3000	2.5	10	10	-10	50	NBR	**347P34** [12]	-	**495905**	1-21	Ex db mb IIC T4	8	8	2.1	8225

Notes:

1. Pilot seat in FKM
2. With manual override

ANODIZED ALUMINIUM PIPE MOUNTING

CONTROL BY ELECTRIC IMPULSE

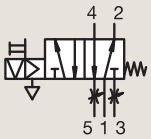

Port size BSP	Orifice Ø 1 mm	Flow factor Qn l/min	Operating Pressure Differential Min bar	Max (MOPD) AC bar	Max (MOPD) DC bar	Fluid Temp. Min °C	Fluid Temp. Max °C	Seat Seal	Parker LUCIFER® Valves Valve Ref.	Housing Ref.	Coil Ref.	ATEX Zone	Protection Mode	Power AC W	Power DC W	Coil Group	Dwg. No.
1/8"	4	600	2	-	10	-25	80	NBR	**345P21**	**4269**	**485400**	-	-	-	13	4.0	8123

For this page	Port size	Orifice (mm)	Qn (l/min)	MOPD (bar)	Fluid Temp (°C)	Amb Temp (°C)
From	1/8"	4	600	10	-25	-25
To	1/2"	12	3000	10	80	50

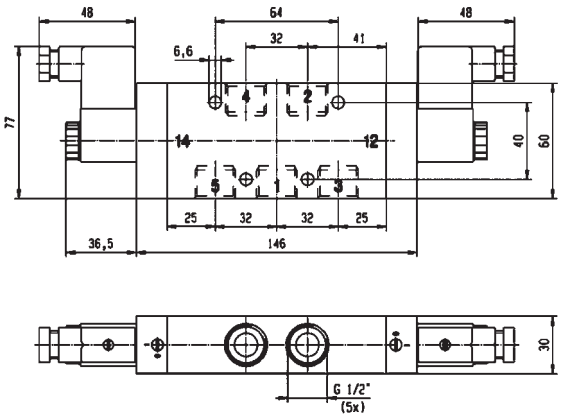

Drawing 8224

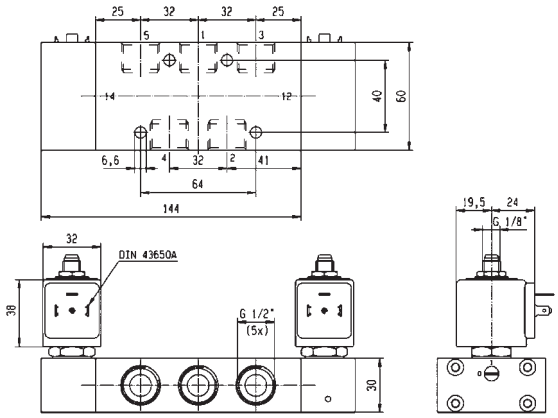

Drawing 8225

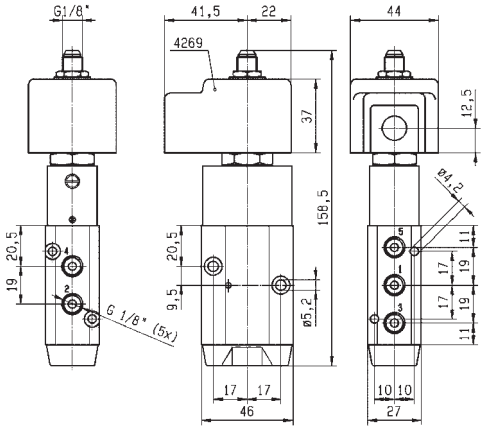

Drawing 8123

3/2

3 & 5 WAY PNEUMATIC VALVES FOR ACTUATOR CONTROL (PIPE MOUNTING)

MANUAL RESET

BRASS
PIPE MOUNTING
UNIVERSAL

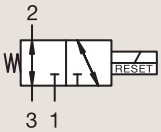

Port size	Orifice Ø 1 mm	Flow factor Qn l/min	Operating Pressure Differential Min bar	Max (MOPD) AC bar	Max (MOPD) DC bar	Fluid Temp. Min °C	Fluid Temp. Max °C	Seat Seal	Parker LUCIFER® Valves: Valve Ref.	Housing Ref.	Coil Ref.	ATEX Zone	Protection Mode	Power AC W	Power DC W	Coil Group	Dwg. No.
1/4" NPT	6	680	0	10	10	-25	65	NBR	**U033X0111**	-	**492310**	1-21	Ex eb mb II T3 to T6	6	6	10.1/10.2/12.0	7641
	6	680	0	10	10	-25	65	NBR	**U033X0111**	-	**496700**	1-21	Ex db mb IIC T4 to T6	6	6	10.1/10.2/12.0	7641

For this page	Port size	Orifice (mm)	Qn (l/min)	MOPD (bar)	Fluid Temp (°C)	Amb Temp (°C)
From	1/4''	6	680	10	-25	-25
To	1/4''	6	680	10	65	65

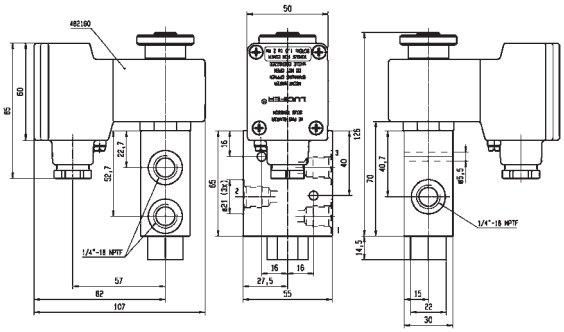

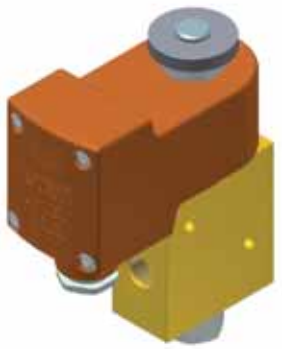

Drawing 7641

3 & 5 WAY PNEUMATIC VALVES FOR ACTUATOR CONTROL (NAMUR)

3/2
5/2
5/3

Actuation	Body	Function	Port Size	Orifice (mm)	Qn (l/min)	MOPD (bar)	Max Fluid Temp. (°C)	Page Parker Valves	Page Parker LUCIFER® Valves
Direct Operated	Anodized aluminium/ NAMUR	Normally Closed	1/4''	6	680	10	75	-	334
Pilot Operated	Anodized aluminium/ NAMUR/Spool	Solenoid operated - spring return	1/8''-1/4''	4 to 8	1400	10	80	-	340
			1/4''	7 to 8	1400	10	80	-	336
			1/2''	12	3000	10	50	-	336
		Dual Solenoids	1/8''-1/4''	4	400	10	80	-	352
			1/4''	7 to 8	1400	10	120	-	354
			1/2''	12	3000	10	120	-	356
		W1 closed center position	1/8''-1/4''	4	400	10	80	-	358
			1/4''	4 to 7	1250	10	120	-	358
		W3 exhausted in center position	1/4''	7	1250	10	50	-	360
		Control by Electric Impulse	1/8''-1/4''	4	600	10	80	-	362
	Anodized aluminium/ NAMUR/Poppet	Solenoid operated - spring return	1/8''-1/4''	4	355	10	75	-	362
Air Operated	Anodized aluminium/ NAMUR	W1 closed center position	1/4''	7	1250	10	50	-	372
		Air operated - spring return	1/8''-1/4''	4	600	10	80	-	368
			1/4''	7	1250	10	50	-	366
			1/2''	12	3000	10	50	-	366
		Air operated and return	1/4''	7	1250	10	50	-	370

3/2

3 & 5 WAY PNEUMATIC VALVES FOR ACTUATOR CONTROL (NAMUR)

DIRECT OPERATED

ANODIZED ALUMINIUM NAMUR

NORMALLY CLOSED

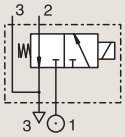

Port size	Orifice Ø	Flow factor	Operating Pressure Differential			Fluid Temp.		Seat Seal	Parker LUCIFER® Valves			ATEX Zone	Protection Mode	Power		Coil Group	Dwg. No.
	1		Min	Max (MOPD)		Min	Max		Valve Ref.	Housing Ref.	Coil Ref.						
BSP	mm	Qn l/min	bar	AC bar	DC bar	°C	°C							AC W	DC W		
1/4"	6	680	0	10	10	-25	75	NBR	**131X1101**	**-**	**492310**	1-21	Ex eb mb II T3 to T6	6	6	9.0/10.1	7336
	6	680	0	-	10	-25	75	NBR	**131X1101**	**-**	**492965.01**	0-20	Ex ia IIC T6	-	0.3 to 3	9.0/10.1	7336
	6	680	0	10	10	-25	75	NBR	**131X1101**	**-**	**496700**	1-21	Ex db mb IIC T4 to T6	6	6	9.0/10.1	7336
	6	680	0	10	10	-25	75	NBR	**131X1101**	**-**	**496895**	-	-	8	8	9.0/10.1	7336
	6	680	0	-	10	-25	65	NBR	**131X1131** [1]	**-**	**492310**	1-21	Ex eb mb II T3 to T6	-	6	10.1/10.2	7336
	6	680	0	-	10	-25	65	NBR	**131X1131** [1]	**-**	**496700**	1-21	Ex db mb IIC T4 to T6	-	6	10.1/10.2	7336
	6	680	0	-	10	-25	65	NBR	**131X1131** [1]	**-**	**496895**	-	-	-	8	10.1/10.2	7336
1/4" NPT	6	680	0	-	10	-25	75	NBR	**U131X1101**	**-**	**492965.01**	0-20	Ex ia IIC T6	-	0.3 to 3	10.1/10.2	7336
	6	680	0	10	10	-25	65	NBR	**U131X1101**	**-**	**496700**	1-21	Ex db mb IIC T4 to T6	6	6	10.1/10.2	7336
	6	680	0	10	10	-25	65	NBR	**U131X1101**	**-**	**496895**	-	-	8	8	10.1/10.2	7336

Notes:

1. DC voltage only. Minimum drop off voltage is 15% of nominal voltage (former DIN 19251)

For this page	Port size	Orifice (mm)	Qn (l/min)	MOPD (bar)	Fluid Temp (°C)	Amb Temp (°C)
From	1/4''	6	680	10	-25	-25
To	1/4''	6	680	10	75	65

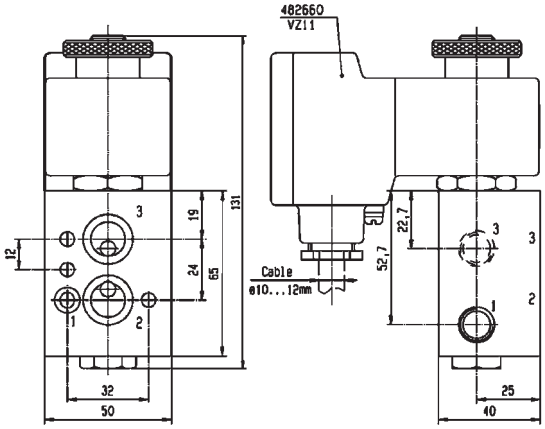

Drawing 7336

3/2

3 & 5 WAY PNEUMATIC VALVES FOR ACTUATOR CONTROL (NAMUR)

PILOT OPERATED

ANODIZED ALUMINIUM NAMUR

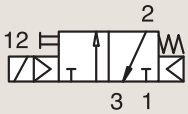

SOLENOID OPERATED - SPRING RETURN

Port size	Orifice Ø	Flow factor	Operating Pressure Differential			Fluid Temp.		Seat Seal	Parker LUCIFER® Valves			ATEX Zone	Protection Mode	Power		Coil Group	Dwg. No.
	1		Min	Max (MOPD)		Min	Max		Valve Ref.	Housing Ref.	Coil Ref.						
BSP	mm	Qn l/min	bar	AC bar	DC bar	°C	°C							AC W	DC W		
1/4"	7	1250	2.5	10	10	-10	50	NBR	331N03 [1]	-	496131	-	-	3	3	1.2	8056
	7	1250	2.5	10	10	-10	50	NBR	331N03 [1]	-	496482	-	-	3	3	1.2	8056
	7	1250	2.5	10	10	-10	50	NBR	331N03 [1]	-	496637	22	Ex tc IIIC T95°C	3	3	1.2	8056
1/2"	12	3000	2.5	10	10	-10	50	NBR	331N04 [1]	-	496131	-	-	3	3	1.2	8060
	12	3000	2.5	10	10	-10	50	NBR	331N04 [1]	-	496482	-	-	3	3	1.2	8060
	12	3000	2.5	10	10	-10	50	NBR	331N04 [1]	-	496637	22	Ex tc IIIC T95°C	3	3	1.2	8060
	12	3000	2.5	10	10	-10	50	NBR	331N0402	-	496131	-	-	3	3	1.2	8251
	12	3000	2.5	10	10	-10	50	NBR	331N0402	-	496482	-	-	3	3	1.2	8251

Notes:

1. With manual override

For this page	Port size	Orifice (mm)	Qn (l/min)	MOPD (bar)	Fluid Temp (°C)	Amb Temp (°C)
From	1/4"	7	1250	10	-10	-10
To	1/2"	12	3000	10	50	50

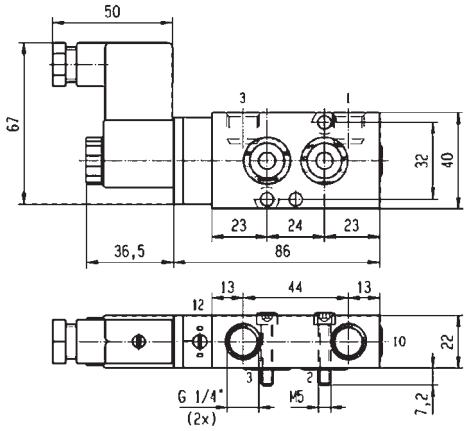

Drawing 8056

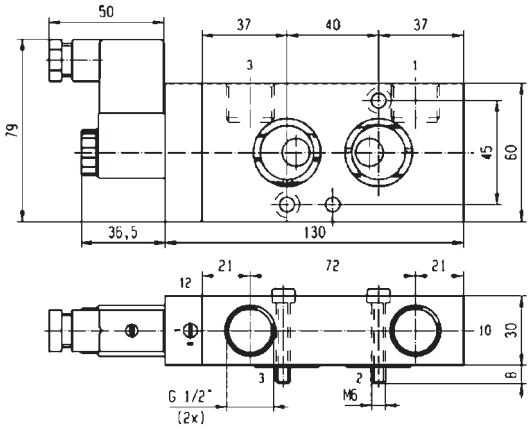

Drawing 8060

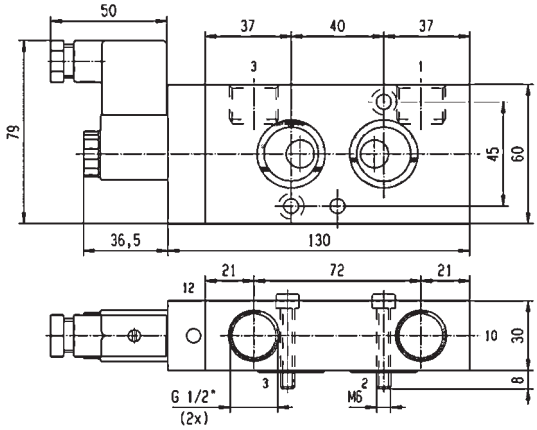

Drawing 8251

3/2

3 & 5 WAY PNEUMATIC VALVES FOR ACTUATOR CONTROL (NAMUR)
PILOT OPERATED

ANODIZED ALUMINIUM NAMUR

SOLENOID OPERATED - SPRING RETURN

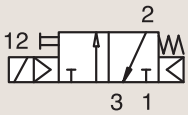

Port size BSP	Orifice Ø 1 mm	Flow factor Qn l/min	Operating Pressure Differential Min bar	Max (MOPD) AC bar	Max (MOPD) DC bar	Fluid Temp. Min °C	Fluid Temp. Max °C	Seat Seal	Parker LUCIFER® Valves Valve Ref.	Housing Ref.	Coil Ref.	ATEX Zone	Protection Mode	Power AC W	Power DC W	Coil Group	Dwg. No.
1/2"	12	3000	2.5	10	10	-10	50	NBR	**331N34 12**	**2995**	**481865**	-	-	8	9	2.1	8210
	12	3000	2.5	10	10	-10	50	NBR	**331N34 12**	**2995**	**495870**	2-22	Ex nAc nCc IIC T3/T4	8	9	2.1	8210
	12	3000	2.5	10	10	-10	50	NBR	**331N34 12**	**-**	**495905**	1-21	Ex db mb IIC T4	8	8	2.1	8210
	12	3000	2.5	10	10	-10	50	NBR	**331N3402 2**	**2995**	**481865**	-	-	8	9	2.1	8252

Notes:

1. With manual override
2. Pilot seat in FKM

For this page	Port size	Orifice (mm)	Qn (l/min)	MOPD (bar)	Fluid Temp (°C)	Amb Temp (°C)
From	1/2"	12	3000	10	-10	-10
To	1/2"	12	3000	10	50	50

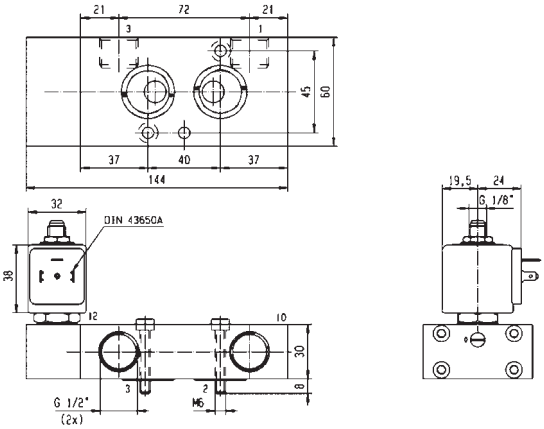

Drawing 8210

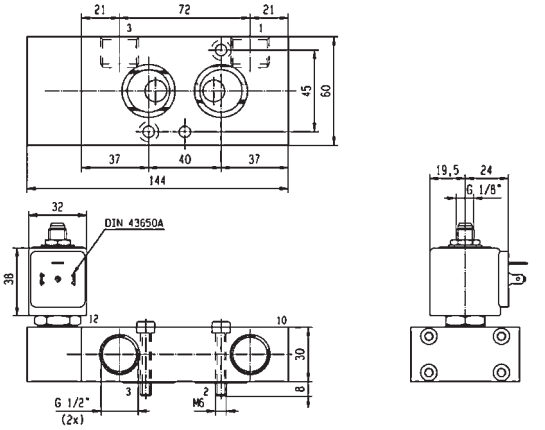

Drawing 8252

3/2-5/2 3 & 5 WAY PNEUMATIC VALVES FOR ACTUATOR CONTROL (NAMUR)

PILOT OPERATED

ANODIZED ALUMINIUM NAMUR

SOLENOID OPERATED - SPRING RETURN

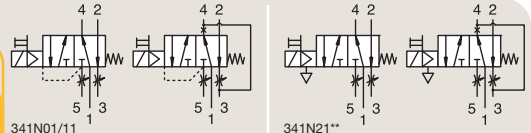

Port size BSP	Orifice Ø 1 mm	Flow factor Qn l/min	Operating Pressure Differential Min bar	Max (MOPD) AC bar	Max (MOPD) DC bar	Fluid Temp. Min °C	Fluid Temp. Max °C	Seat Seal	Parker LUCIFER® Valves Valve Ref.	Housing Ref.	Coil Ref.	ATEX Zone	Protection Mode	Power AC W	Power DC W	Coil Group	Dwg. No.
1/8"-1/4"	4	600	2	10	10	-25	80	NBR	341N01 12	8993	488980	-	-	2	2.5	1.1	7301
	4	600	2	10	10	-25	80	NBR	341N11 12	8993	488980	-	-	2	2.5	1.1	7300
	4	600	2	10	10	-25	80	NBR	341N21 12	2995	481865	-	-	8	9	2.1	7311
	4	600	2	10	10	-25	80	NBR	341N21 12	4270	481000	-	-	8	8	2.1	7311
	4	600	2	-	10	-25	55	NBR	341N2190 12	2995	483580.01	0-20	Ex ia IIC T6	-	0.5 to 3	7.0/8.0	7874
	4	600	2	-	10	-25	55	NBR	341N2190 12	-	495910	0-20	Ex ia IIC T4 to T6	-	0.3 to 3	7.0/8.0	7874

Notes:

1. With captured exhaust
2. With manual override

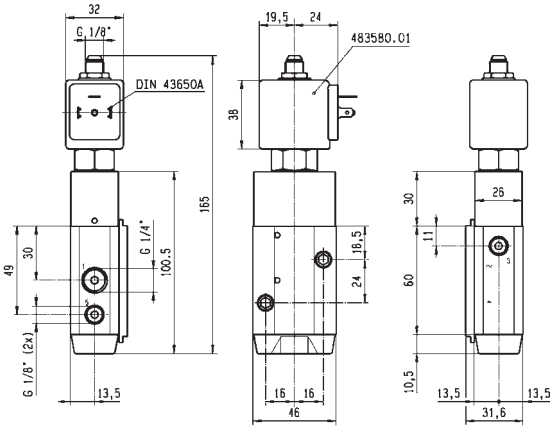

Drawing 7874

For this page	Port size	Orifice (mm)	Qn (l/min)	MOPD (bar)	Fluid Temp (°C)	Amb Temp (°C)
From	1/8"-1/4"	4	600	10	-25	-25
To	1/8"-1/4"	4	600	10	80	50

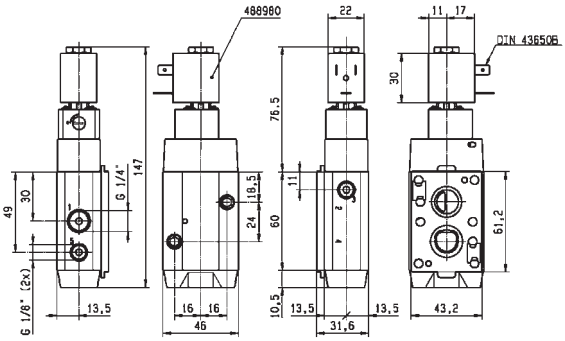

Drawing 7301

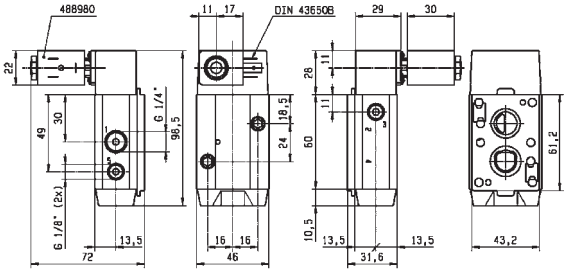

Drawing 7300

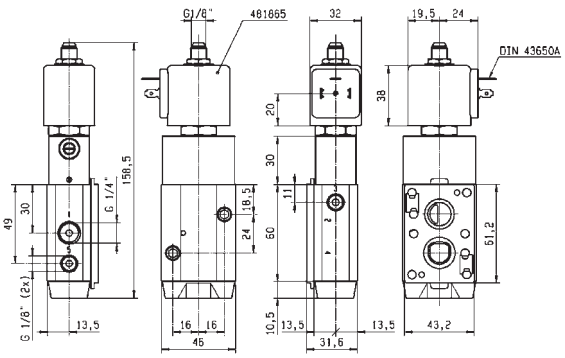

Drawing 7311

3/2-5/2 3 & 5 WAY PNEUMATIC VALVES FOR ACTUATOR CONTROL (NAMUR)

PILOT OPERATED

ANODIZED ALUMINIUM NAMUR

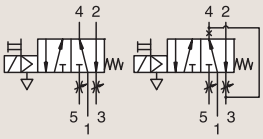

SOLENOID OPERATED - SPRING RETURN

Port size BSP	Orifice Ø 1 mm	Flow factor Qn l/min	Operating Pressure Differential Min bar	Max (MOPD) AC bar	Max (MOPD) DC bar	Fluid Temp. Min °C	Fluid Temp. Max °C	Seat Seal	Parker LUCIFER® Valves Valve Ref.	Housing Ref.	Coil Ref.	ATEX Zone	Protection Mode	Power AC W	Power DC W	Coil Group	Dwg. No.
1/8" 1/4"	4	600	2	10	10	-25	80	NBR	**341N31 [34]**	**2995**	**481865**	-	-	8	9	2.1	7295
	4	600	2	10	10	-25	80	NBR	**341N31 [34]**	**2995**	**495870**	2-22	Ex nAc nCc IIC T3/T4	8	9	2.1	7295
	4	600	2	10	10	-25	65	NBR	**341N31 [34]**	**-**	**495905**	1-21	Ex db mb IIC T4	8	8	2.1	7295
	4	600	2	10	10	-25	80	NBR	**341N3102 [4]**	**2995**	**481865**	-	-	8	9	2.1	7295
	4	600	2	10	10	-40	65	PUR	**341N3108 [3]**	**2995**	**481865**	-	-	8	9	2.1	7295
	4	600	2	10	10	-40	65	PUR	**341N3108 [3]**	**4270**	**481000**	-	-	8	8	2.1	7295
	4	600	2	10	10	-40	65	PUR	**341N3128**	**2995**	**481865**	-	-	8	9	2.1	7295
	4	600	2	10	10	-40	65	PUR	**341N3128**	**4270**	**481865**	-	-	8	9	2.1	7295
	4	600	2	-	10	-25	80	NBR	**341N3130 [134]**	**2995**	**481865**	-	-	-	9	2.1	7295
	4	600	2	-	10	-25	80	NBR	**341N3130 [134]**	**-**	**492190**	1-21	Ex eb mb IIC T3/T4	-	9	2.1	7295
	4	600	2	-	10	-25	80	NBR	**341N3130 [134]**	**-**	**495905**	1-21	Ex db mb IIC T4	-	8	2.1	7295
	4	600	2	-	10	-10	55	NBR	**341N3190**	**2995**	**483580.01**	0-20	Ex ia IIC T6	-	0.5 to 3	7.0/8.0	7349
	4	600	2	-	10	-10	75	NBR	**341N3190**	**-**	**488660.01**	0-20	Ex ia IIC T6	-	0.3 to 3	7.0/8.0	7349
	4	600	2	-	10	-10	75	NBR	**341N3190**	**-**	**495910**	0-20	Ex ia IIC T4 to T6	-	0.3 to 3	7.0/8.0	7349
	4	600	2	-	10	-25	65	NBR	**341N3196 [5]**	**2995**	**482740**	-	-	-	1.6	6.0/8.0	8017
	4	600	2	10	10	-25	65	NBR	**341N3196 [5]**	**-**	**495900**	1-21	Ex db mb IIC T4 to T6	2.5	2	6.0/8.0	8017
	4	600	2	-	10	-25	65	NBR	**341N3196 [5]**	**-**	**495910**	0-20	Ex ia IIC T4 to T6	-	0.3 to 3	6.0/8.0	8017
	4	600	2	-	10	-25	65	NBR	**341N3196 [5]**	**2995**	**496125**	2-22	Ex nAc nCc IIC T5/T6	-	1.6	6.0/8.0	8017
	4	600	2	-	10	-25	65	NBR	**341N3197 [35]**	**2995**	**482740**	-	-	-	1.6	6.0/8.0	8017
	4	600	2	10	10	-25	65	NBR	**341N3197 [35]**	**-**	**495900**	1-21	Ex db mb IIC T4 to T6	2.5	2	6.0/8.0	8017
	4	600	2	-	10	-25	65	NBR	**341N3197 [35]**	**-**	**495910**	0-20	Ex ia IIC T4 to T6	-	0.3 to 3	6.0/8.0	8017
	4	600	2	-	10	-25	65	NBR	**341N3197 [35]**	**2995**	**496125**	2-22	Ex nAc nCc IIC T5/T6	-	1.6	6.0/8.0	8017

Notes:

1. DC voltage only. Minimum drop off voltage is 15% of nominal voltage (former DIN 19251)
2. With captured exhaust
3. With manual override
4. Pilot seat in FKM
5. Pilot seat in PUR

For this page	Port size	Orifice (mm)	Qn (l/min)	MOPD (bar)	Fluid Temp (°C)	Amb Temp (°C)
From	1/8"-1/4"	4	600	10	-40	-25
To	1/8"-1/4"	4	600	10	80	50

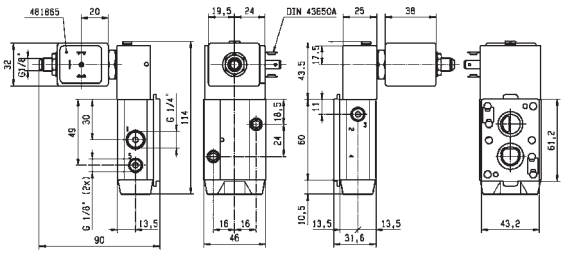

Drawing 7295

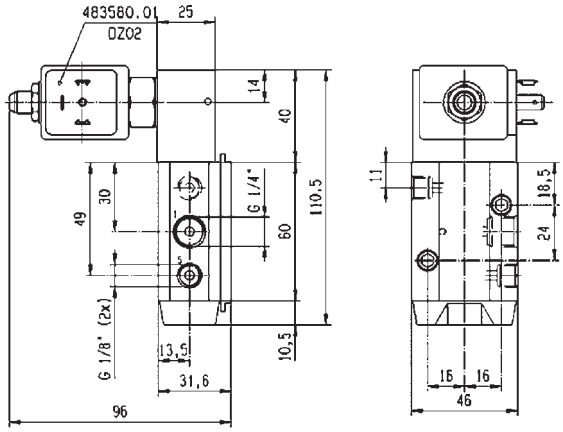

Drawing 7349

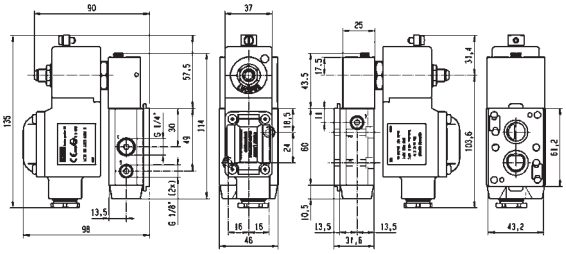

Drawing 8017

3/2-5/2 3 & 5 WAY PNEUMATIC VALVES FOR ACTUATOR CONTROL (NAMUR)

PILOT OPERATED

ANODIZED ALUMINIUM NAMUR

SOLENOID OPERATED - SPRING RETURN

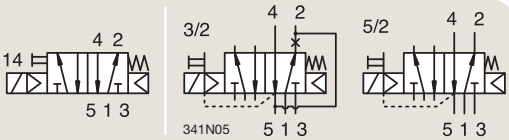

Port size BSP	Orifice Ø 1 mm	Flow factor Qn l/min	Operating Pressure Differential Min bar	Max (MOPD) AC bar	Max (MOPD) DC bar	Fluid Temp. Min °C	Fluid Temp. Max °C	Seat Seal	Parker LUCIFER® Valves Valve Ref.	Housing Ref.	Coil Ref.	ATEX Zone	Protection Mode	Power AC W	Power DC W	Coil Group	Dwg. No.
1/8" 1/4"	8	1400	2	-	10	-25	55	NBR	**341N3290**	**2995**	**483580.01**	0-20	Ex ia IIC T6	-	0.5 to 3	7.0/8.0	7350
	8	1400	2	-	10	-25	75	NBR	**341N3290**	**-**	**488660.01**	0-20	Ex ia IIC T6	-	0.3 to 3	7.0/8.0	7350
	8	1400	2	-	10	-25	75	NBR	**341N3290**	**-**	**495910**	0-20	Ex ia IIC T4 to T6	-	0.3 to 3	7.0/8.0	7350
	8	1400	2	-	10	-20	80	NBR	**341N3296**	**2995**	**482740**	-	-	-	1.6	6.0/8.0	8029
	8	1400	2	10	10	-20	80	NBR	**341N3296**	**-**	**495900**	1-21	Ex db mb IIC T4 to T6	2.5	2	6.0/8.0	8029
	8	1400	2	-	10	-20	80	NBR	**341N3296**	**-**	**495910**	0-20	Ex ia IIC T4 to T6	-	0.3 to 3	6.0/8.0	8029
	8	1400	2	-	10	-20	80	NBR	**341N3296**	**2995**	**496125**	2-22	Ex nAc nCc IIC T5/T6	-	1.6	6.0/8.0	8029
	8	1400	2	-	10	-20	80	NBR	**341N3297**[1]	**2995**	**482740**	-	-	-	1.6	6.0/8.0	8029
	8	1400	2	10	10	-20	80	NBR	**341N3297**[1]	**-**	**495900**	1-21	Ex db mb IIC T4 to T6	2.5	2	6.0/8.0	8029
	8	1400	2	-	10	-20	80	NBR	**341N3297**[1]	**-**	**495910**	0-20	Ex ia IIC T4 to T6	-	0.3 to 3	6.0/8.0	8029
	8	1400	2	-	10	-20	80	NBR	**341N3297**[1]	**2995**	**496125**	2-22	Ex nAc nCc IIC T5/T6	-	1.6	6.0/8.0	8029
1/4"	7	1250	2.5	10	10	-10	50	NBR	**341N05**[1]	**-**	**496131**	-	-	3	3	1.2	8162
	7	1250	2.5	10	10	-10	50	NBR	**341N05**[1]	**-**	**496482**	-	-	3	3	1.2	8162
	7	1250	2.5	10	10	-10	50	NBR	**341N05**[1]	**-**	**496637**	22	Ex tc IIIC T95°C	3	3	1.2	8162

Notes:

1. With manual override

For this page	Port size	Orifice (mm)	Qn (l/min)	MOPD (bar)	Fluid Temp (°C)	Amb Temp (°C)
From	1/8"-1/4"	7	1250	10	-25	-25
To	1/4"	8	1400	10	80	50

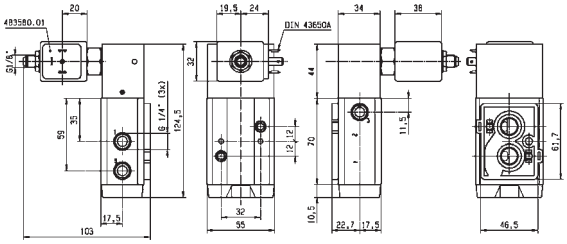

Drawing 7350

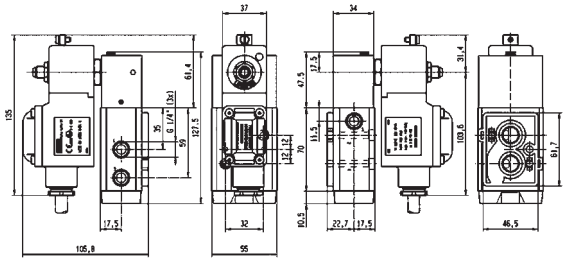

Drawing 8029

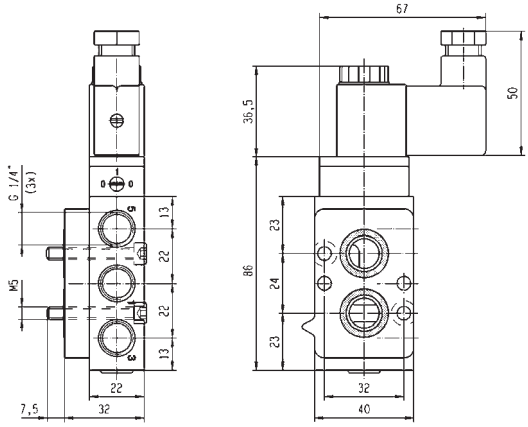

Drawing 8162

3/2-5/2 3 & 5 WAY PNEUMATIC VALVES FOR ACTUATOR CONTROL (NAMUR)

PILOT OPERATED

ANODIZED ALUMINIUM NAMUR

SOLENOID OPERATED - SPRING RETURN

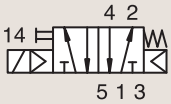

Port size BSP	Orifice Ø 1 mm	Flow factor Qn l/min	Operating Pressure Differential Min bar	Max (MOPD) AC bar	Max (MOPD) DC bar	Fluid Temp. Min °C	Fluid Temp. Max °C	Seat Seal	Parker LUCIFER® Valves Valve Ref.	Housing Ref.	Coil Ref.	ATEX Zone	Protection Mode	Power AC W	Power DC W	Coil Group	Dwg. No.
1/4"	7	1200	2.5	10	10	-10	50	NBR	**341N0502**	**-**	**496131**	-	-	3	3	1.2	8253
	7	1200	2.5	10	10	-10	50	NBR	**341N0502**	**-**	**496482**	-	-	3	3	1.2	8253
	7	1200	2.5	10	10	-10	50	NBR	**341N35 [2]**	**2995**	**481865**	-	-	8	9	2.1	8213
	7	1200	2.5	10	10	-10	50	NBR	**341N35 [2]**	**2995**	**495870**	2-22	Ex nAc nCc IIC T3/T4	8	9	2.1	8213
	7	1200	2.5	10	10	-10	50	NBR	**341N35 [2]**	**-**	**495905**	1-21	Ex db mb IIC T4	8	8	2.1	8213
	7	1200	2.5	10	10	-10	50	NBR	**341N3502**	**2995**	**481865**	-	-	8	9	2.1	8254
	7	1200	2.5	10	10	-10	50	NBR	**341N3502**	**4270**	**481000**	-	-	8	8	2.1	8254
	8	1400	2	10	10	-25	80	NBR	**341N02 [12]**	**8993**	**488980**	-	-	2	2.5	1.1	7313

Notes:

1. With captured exhaust
2. With manual override

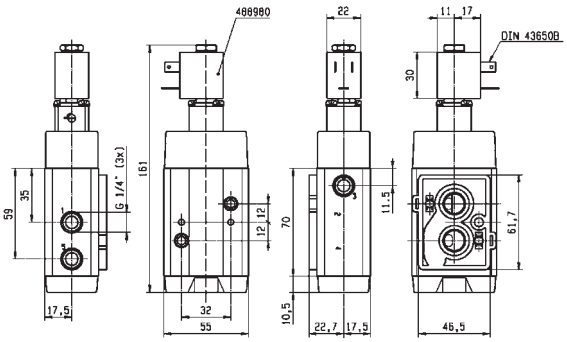

Drawing 7313

For this page	Port size	Orifice (mm)	Qn (l/min)	MOPD (bar)	Fluid Temp (°C)	Amb Temp (°C)
From	1/4"	7	1200	10	-25	-25
To	1/4"	8	1400	10	80	50

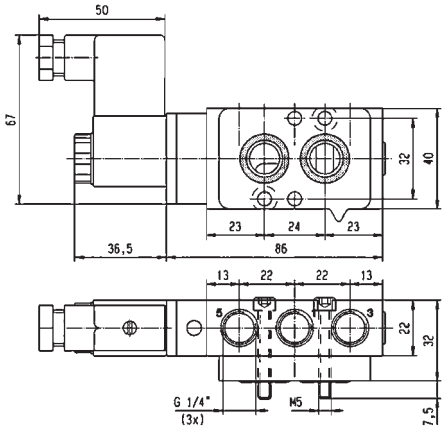

Drawing 8253

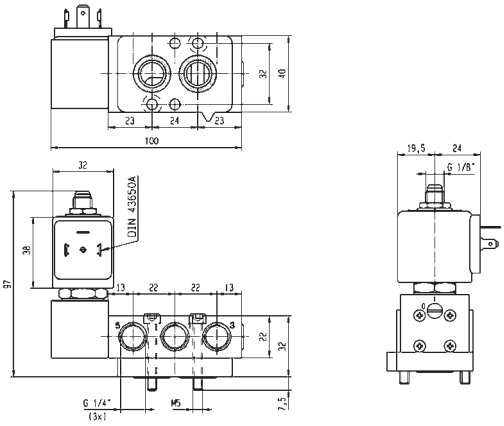

Drawing 8213

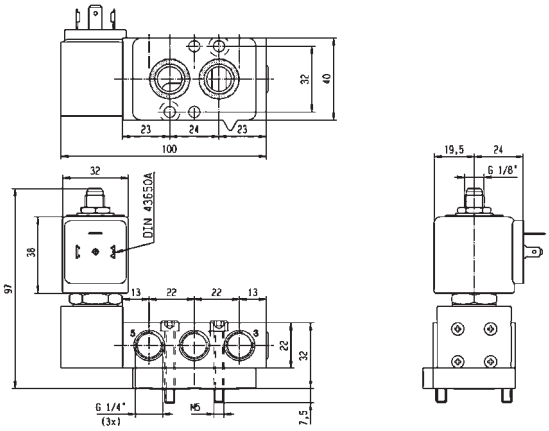

Drawing 8254

3/2-5/2 3 & 5 WAY PNEUMATIC VALVES FOR ACTUATOR CONTROL (NAMUR)

PILOT OPERATED

ANODIZED ALUMINIUM NAMUR

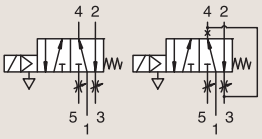

SOLENOID OPERATED - SPRING RETURN

Port size BSP	Orifice Ø 1 mm	Flow factor Qn l/min	Operating Pressure Differential Min bar	Max (MOPD) AC bar	Max (MOPD) DC bar	Fluid Temp. Min °C	Fluid Temp. Max °C	Seat Seal	Parker LUCIFER® Valves Valve Ref.	Housing Ref.	Coil Ref.	ATEX Zone	Protection Mode	Power AC W	Power DC W	Coil Group	Dwg. No.
1/4"	8	1400	2	10	10	-25	80	NBR	341N12 [12]	8993	488980	-	-	2	2.5	1.1	7312
	8	1400	2	10	10	-25	80	NBR	341N22 [2]	2995	481865	-	-	8	9	2.1	7318
	8	1400	2	10	10	-25	80	NBR	341N22 [2]	4270	481000	-	-	8	8	2.1	7318
	8	1400	2	10	10	-25	80	NBR	341N32 [2]	2995	481865	-	-	8	9	2.1	7317
	8	1400	2	10	10	-25	80	NBR	341N32 [2]	2995	495870	2-22	Ex nAc nCc IIC T3/T4	8	9	2.1	7317
	8	1400	2	10	10	-25	80	NBR	341N32 [2]	-	495905	1-21	Ex db mb IIC T4	8	8	2.1	7317
	8	1400	2	10	10	-25	80	NBR	341N3202	2995	481865	-	-	8	9	2.1	7317
	8	1400	2	10	10	-25	80	NBR	341N3202	2995	495870	2-22	Ex nAc nCc IIC T3/T4	8	9	2.1	7317
	8	1400	2	10	10	-25	80	NBR	341N3202	-	495905	1-21	Ex db mb IIC T4	8	8	2.1	7317

Notes:

1. With captured exhaust
2. With manual override

For this page	Port size	Orifice (mm)	Qn (l/min)	MOPD (bar)	Fluid Temp (°C)	Amb Temp (°C)
From	1/4"	8	1400	10	-25	-25
To	1/4"	8	1400	10	80	50

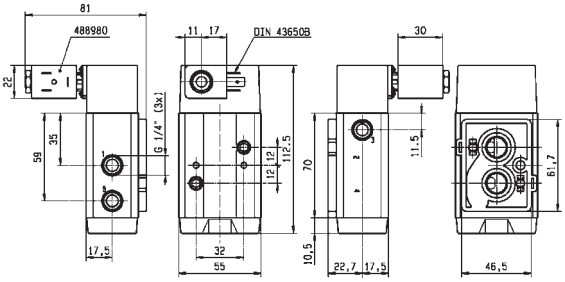

Drawing 7312

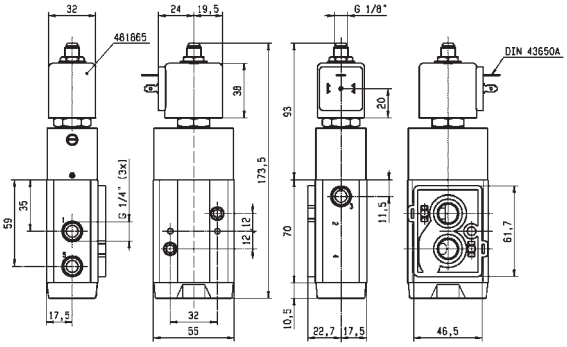

Drawing 7318

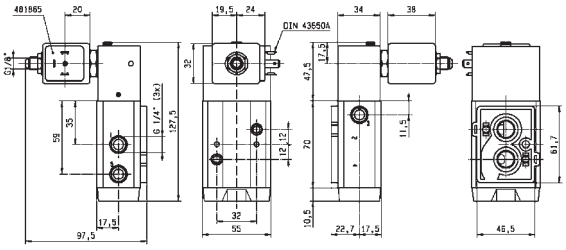

Drawing 7317

5/2 3 & 5 WAY PNEUMATIC VALVES FOR ACTUATOR CONTROL (NAMUR)

PILOT OPERATED

ANODIZED ALUMINIUM NAMUR

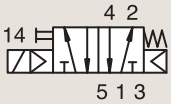

SOLENOID OPERATED - SPRING RETURN

Port size BSP	Orifice Ø 1 mm	Flow factor Qn l/min	Operating Pressure Differential Min bar	Max (MOPD) AC bar	Max (MOPD) DC bar	Fluid Temp. Min °C	Fluid Temp. Max °C	Seat Seal	Parker LUCIFER® Valves Valve Ref.	Housing Ref.	Coil Ref.	ATEX Zone	Protection Mode	Power AC W	Power DC W	Coil Group	Dwg. No.
1/4"	7	1250	2.5	10	10	-10	50	NBR	**341N03**[1]	-	**496131**	-	-	3	3	1.2	8063
	7	1250	2.5	10	10	-10	50	NBR	**341N03**[1]	-	**496482**	-	-	3	3	1.2	8063
	7	1250	2.5	10	10	-10	50	NBR	**341N03**[1]	-	**496637**	22	Ex tc IIIC T95°C	3	3	1.2	8063
1/2"	12	3000	2.5	10	10	-10	50	NBR	**341N04**[1]	-	**496131**	-	-	3	3	1.2	8065
	12	3000	2.5	10	10	-10	50	NBR	**341N04**[1]	-	**496482**	-	-	3	3	1.2	8065
	12	3000	2.5	10	10	-10	50	NBR	**341N04**[1]	-	**496637**	22	Ex tc IIIC T95°C	3	3	1.2	8065
	12	3000	2.5	10	10	-10	50	NBR	**341N34**[12]	**2995**	**481865**	-	-	8	9	2.1	8211
	12	3000	2.5	10	10	-10	50	NBR	**341N34**[12]	**2995**	**495870**	2-22	Ex nAc nCc IIC T3/T4	8	9	2.1	8211
	12	3000	2.5	10	10	-10	50	NBR	**341N34**[12]	-	**495905**	1-21	Ex db mb IIC T4	8	8	2.1	8211

Notes:

1. With manual override
2. Pilot seat in FKM

For this page	Port size	Orifice (mm)	Qn (l/min)	MOPD (bar)	Fluid Temp (°C)	Amb Temp (°C)
From	1/4"	7	1250	10	-10	-10
To	1/2"	12	3000	10	50	50

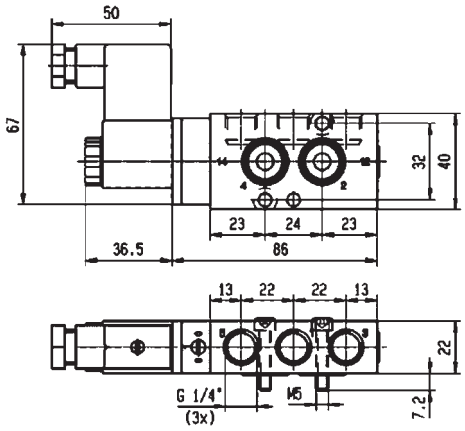

Drawing 8063

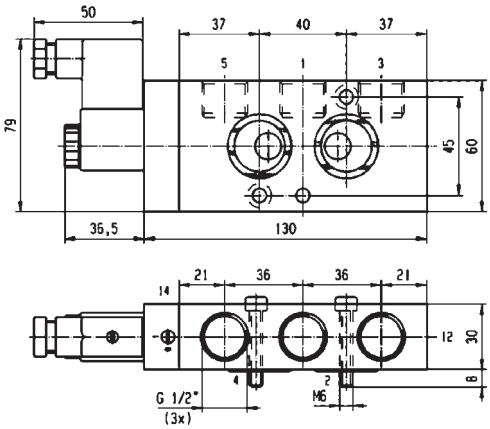

Drawing 8065

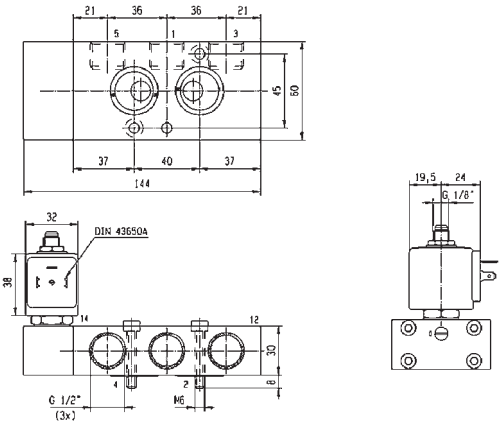

Drawing 8211

5/2

3 & 5 WAY PNEUMATIC VALVES FOR ACTUATOR CONTROL (NAMUR)
PILOT OPERATED

ANODIZED ALUMINIUM NAMUR

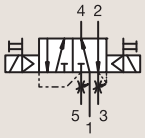

DUAL SOLENOIDS

Port size BSP	Orifice Ø 1 mm	Flow factor Qn l/min	Operating Pressure Differential Min bar	Max (MOPD) AC bar	Max (MOPD) DC bar	Fluid Temp. Min °C	Fluid Temp. Max °C	Seat Seal	Parker LUCIFER® Valves Valve Ref.	Housing Ref.	Coil Ref.	ATEX Zone	Protection Mode	Power AC W	Power DC W	Coil Group	Dwg. No.
1/8"-1/4"	4	400	2	10	10	-25	50	NBR	**347N11 [123]**	**-**	**482606**	1-21	Ex mb IIC T4/T5	2	2.5	1.1	7305
	4	400	2	10	10	-25	80	NBR	**347N11 [123]**	**8993**	**488980**	-	-	2	2.5	1.1	7305
	4	400	2	10	10	-25	80	NBR	**347N31 [23]**	**2995**	**481865**	-	-	8	9	2.1	7297
	4	400	2	10	10	-25	80	NBR	**347N31 [23]**	**2995**	**495870**	2-22	Ex nAc nCc IIC T3/T4	8	9	2.1	7297
	4	400	2	10	10	-25	80	NBR	**347N31 [23]**	**-**	**495905**	1-21	Ex db mb IIC T4	8	8	2.1	7297
	4	400	2	-	10	-25	55	NBR	**347N3190 [3]**	**2995**	**483580.01**	0-20	Ex ia IIC T6	-	0.5 to 3	7.0/8.0	8141
	4	400	2	-	10	-25	65	NBR	**347N3197 [24]**	**2995**	**482740**	-	-	-	1.6	3.0/6.0/8.0	7297
	4	400	2	10	10	-25	65	NBR	**347N3197 [24]**	**-**	**495900**	1-21	Ex db mb IIC T4 to T6	2.5	2	3.0/6.0/8.0	7297
	4	400	2	-	10	-25	65	NBR	**347N3197 [24]**	**-**	**495910**	0-20	Ex ia IIC T4 to T6	-	0.3 to 3	3.0/6.0/8.0	7297
	4	400	2	-	10	-25	65	NBR	**347N3197 [24]**	**2995**	**496125**	2-22	Ex nAc nCc IIC T5/T6	-	1.6	3.0/6.0/8.0	7297

Notes:

1. With captured exhaust
2. With manual override
3. Pilot seat in FKM
4. Pilot seat in PUR

For this page	Port size	Orifice (mm)	Qn (l/min)	MOPD (bar)	Fluid Temp (°C)	Amb Temp (°C)
From	1/8"-1/4"	4	400	10	-25	-25
To	1/8"-1/4"	4	400	10	80	50

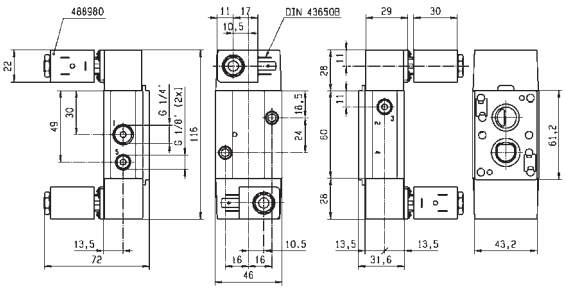

Drawing 7305

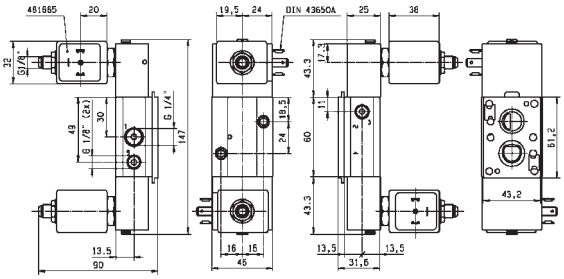

Drawing 7297

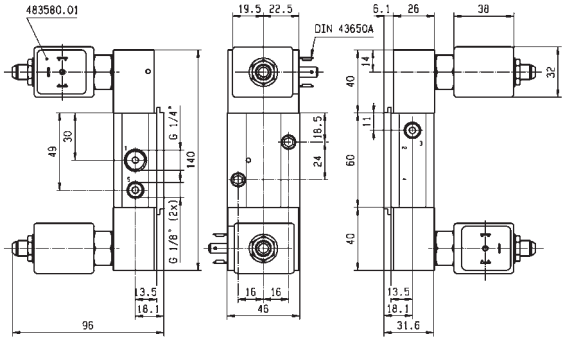

Drawing 8141

5/2

3 & 5 WAY PNEUMATIC VALVES FOR ACTUATOR CONTROL (NAMUR)
PILOT OPERATED

ANODIZED ALUMINIUM NAMUR

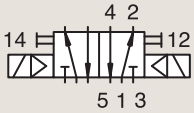

DUAL SOLENOIDS

Port size BSP	Orifice Ø 1 mm	Flow factor Qn l/min	Operating Pressure Differential Min bar	Max (MOPD) AC bar	Max (MOPD) DC bar	Fluid Temp. Min °C	Fluid Temp. Max °C	Seat Seal	Parker LUCIFER® Valves Valve Ref.	Housing Ref.	Coil Ref.	ATEX Zone	Protection Mode	Power AC W	Power DC W	Coil Group	Dwg. No.
1/4"	7	1250	2.5	10	10	-10	50	NBR	347N03 [2]	-	496131	-	-	3	3	1.2	8057
	7	1250	2.5	10	10	-10	50	NBR	347N03 [2]	-	496482	-	-	3	3	1.2	8057
	7	1250	2.5	10	10	-10	50	NBR	347N03 [2]	-	496637	22	Ex tc IIIC T95°C	3	3	1.2	8057
	7	1250	2.5	10	10	-10	50	NBR	347N33 [3]	2995	481865	-	-	8	9	2.1	8209
	7	1250	2.5	10	10	-10	50	NBR	347N33 [3]	2995	495870	2-22	Ex nAc nCc IIC T3/T4	8	9	2.1	8209
	7	1250	2.5	10	10	-10	50	NBR	347N33 [3]	-	495905	1-21	Ex db mb IIC T4	8	8	2.1	8209
	8	1400	2	10	10	-10	65	NBR	347N12 [12]	-	482606	1-21	Ex mb IIC T4/T5	2	2.5	1.1	7315
	8	1400	2	10	10	-25	80	NBR	347N12 [12]	8993	488980	-	-	2	2.5	1.1	7315
	8	1400	2	10	10	-25	80	NBR	347N32 [23]	2995	481865	-	-	8	9	2.1	7320
	8	1400	2	10	10	-25	80	NBR	347N32 [23]	2995	495870	2-22	Ex nAc nCc IIC T3/T4	8	9	2.1	7320
	8	1400	2	10	10	-25	80	NBR	347N32 [23]	-	495905	1-21	Ex db mb IIC T4	8	8	2.1	7320

Notes:

1. With captured exhaust
2. With manual override
3. Pilot seat in FKM

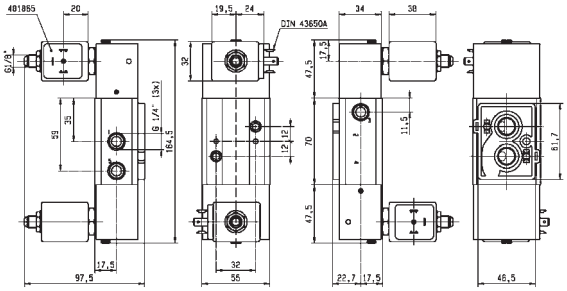

Drawing 7320

For this page	Port size	Orifice (mm)	Qn (l/min)	MOPD (bar)	Fluid Temp (°C)	Amb Temp (°C)
From	1/4"	7	1250	10	-25	-25
To	1/4"	8	1400	10	120	50

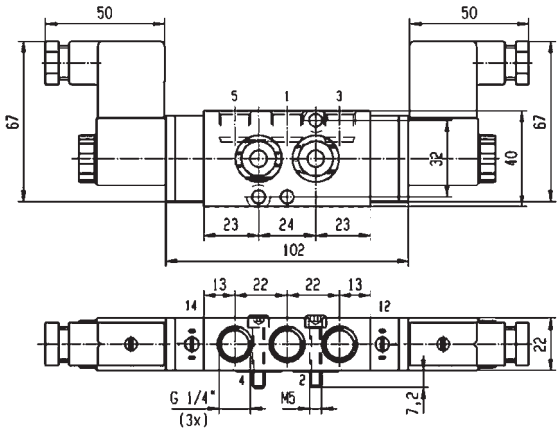

Drawing 8057

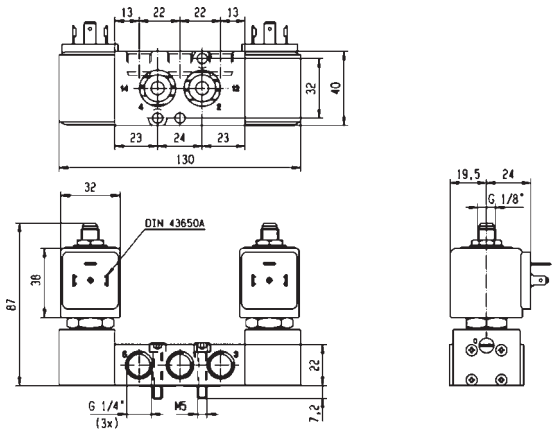

Drawing 8209

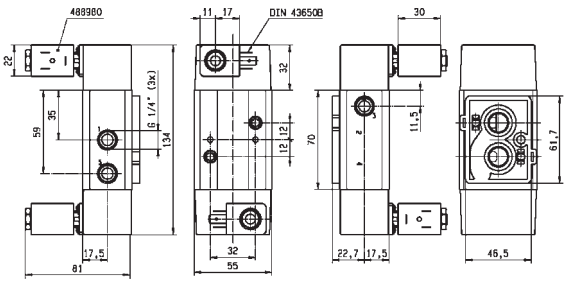

Drawing 7315

5/2 3 & 5 WAY PNEUMATIC VALVES FOR ACTUATOR CONTROL (NAMUR)

PILOT OPERATED

ANODIZED ALUMINIUM NAMUR

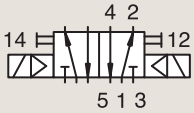

DUAL SOLENOIDS

Port size	Orifice Ø	Flow factor	Operating Pressure Differential			Fluid Temp.		Seat Seal	Parker LUCIFER® Valves			ATEX Zone	Protection Mode	Power		Coil Group	Dwg. No.
	1		Min	Max (MOPD)		Min	Max		Valve Ref.	Housing Ref.	Coil Ref.						
BSP	mm	Qn l/min	bar	AC bar	DC bar	°C	°C							AC W	DC W		
1/2"	12	3000	2.5	10	10	-10	50	NBR	**347N04** [1]	**-**	**496131**	-	-	3	3	1.2	8154
	12	3000	2.5	10	10	-10	50	NBR	**347N04** [1]	**-**	**496482**	-	-	3	3	1.2	8154
	12	3000	2.5	10	10	-10	50	NBR	**347N04** [1]	**-**	**496637**	22	Ex tc IIIC T95°C	3	3	1.2	8154
	12	3000	2.5	10	10	-10	50	NBR	**347N34** [12]	**2995**	**481865**	-	-	8	9	2.1	8212
	12	3000	2.5	10	10	-10	50	NBR	**347N34** [12]	**2995**	**495870**	2-22	Ex nAc nCc IIC T3/T4	8	9	2.1	8212
	12	3000	2.5	10	10	-10	50	NBR	**347N34** [12]	**-**	**495905**	1-21	Ex db mb IIC T4	8	8	2.1	8212

Notes:

1. With manual override
2. Pilot seat in FKM

For this page	Port size	Orifice (mm)	Qn (l/min)	MOPD (bar)	Fluid Temp (°C)	Amb Temp (°C)
From	1/2"	12	3000	10	-10	-10
To	1/2"	12	3000	10	120	50

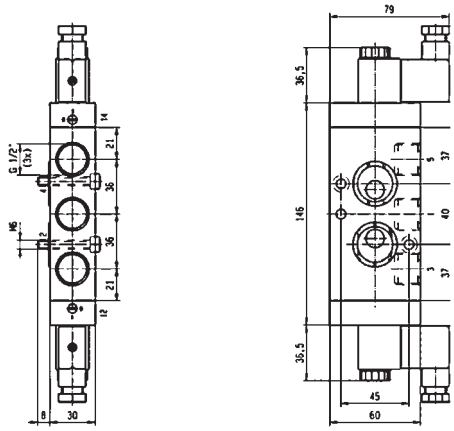

Drawing 8154

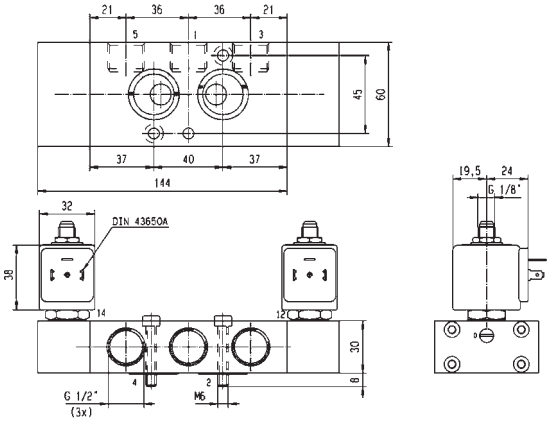

Drawing 8212

5/3 3 & 5 WAY PNEUMATIC VALVES FOR ACTUATOR CONTROL (NAMUR)

PILOT OPERATED

ANODIZED ALUMINIUM NAMUR

W1 CLOSED CENTER POSITION

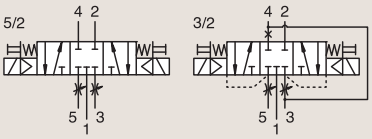

Port size BSP	Orifice Ø 1 mm	Flow factor Qn l/min	Operating Pressure Differential Min bar	Max (MOPD) AC bar	Max (MOPD) DC bar	Fluid Temp. Min °C	Fluid Temp. Max °C	Seat Seal	Parker LUCIFER® Valves Valve Ref.	Housing Ref.	Coil Ref.	ATEX Zone	Protection Mode	Power AC W	Power DC W	Coil Group	Dwg. No.
1/8"-1/4"	4	400	2	10	10	-25	80	NBR	342N11 [12]	-	482606	1-21	Ex mb IIC T4/T5	2	2.5	1.1	7305
	4	400	2	10	10	-25	80	NBR	342N11 [12]	8993	488980	-	-	2	2.5	1.1	7305
1/4"	4	400	2	-	10	-10	65	NBR	342N3197 [2]	-	495910	0-20	Ex ia IIC T4 to T6	-	0.3 to 3	6.0/8.0	7297
	7	1250	3	10	10	-10	50	NBR	342N03 [2]	-	496131	-	-	3	3	1.2	8057
	7	1250	3	10	10	-10	50	NBR	342N03 [2]	-	496482	-	-	3	3	1.2	8057
	7	1250	3	10	10	-10	50	NBR	342N03 [2]	-	496637	22	Ex tc IIIC T95°C	3	3	1.2	8057
	7	1250	2.5	10	10	-10	50	NBR	342N33 [2]	2995	481865	-	-	8	9	2.1	8209
	7	1250	2.5	10	10	-10	50	NBR	342N33 [2]	2995	495870	2-22	Ex nAc nCc IIC T3/T4	8	9	2.1	8209
	7	1250	2.5	10	10	-10	50	NBR	342N33 [2]	-	495905	1-21	Ex db mb IIC T4	8	8	2.1	8209

Notes:

1. With captured exhaust
2. With manual override

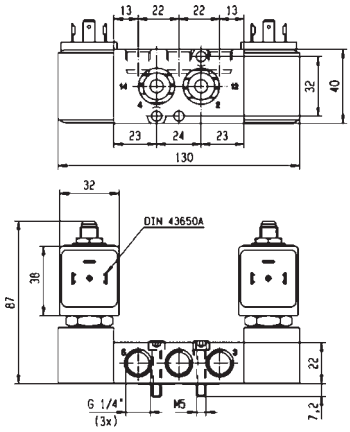

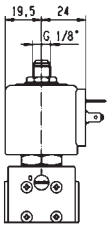

Drawing 8209

For this page	Port size	Orifice (mm)	Qn (l/min)	MOPD (bar)	Fluid Temp (°C)	Amb Temp (°C)
From	1/8"-1/4"	4	400	10	-25	-25
To	1/4"	7	1250	10	120	50

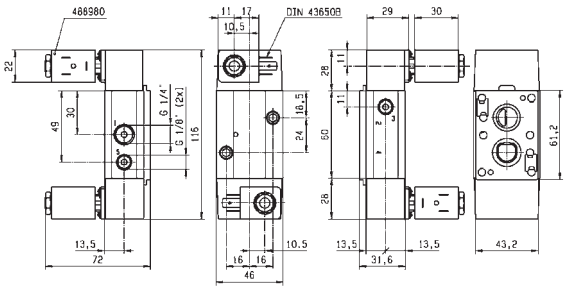

Drawing 7305

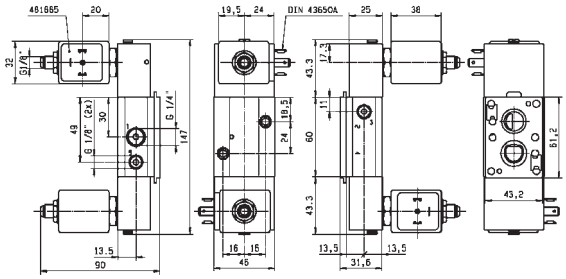

Drawing 7297

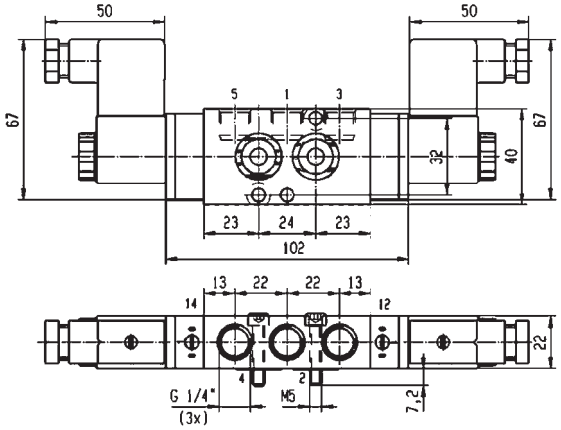

Drawing 8057

5/3 3 & 5 WAY PNEUMATIC VALVES FOR ACTUATOR CONTROL (NAMUR)

PILOT OPERATED

ANODIZED ALUMINIUM NAMUR

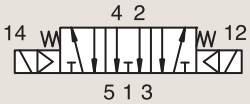

W3 EXHAUSTED IN CENTER POSITION

Port size	Orifice Ø	Flow factor	Operating Pressure Differential			Fluid Temp.		Seat Seal	Parker LUCIFER® Valves			ATEX Zone	Protection Mode	Power		Coil Group	Dwg. No.
	1		Min	Max (MOPD)		Min	Max		Valve Ref.	Housing Ref.	Coil Ref.						
BSP	mm	Qn l/min	bar	AC bar	DC bar	°C	°C							AC W	DC W		
1/4"	7	1250	2.5	10	10	-10	50	NBR	**343N03** [1]	-	**496131**	-	-	3	3	1.2	8057
	7	1250	2.5	10	10	-10	50	NBR	**343N03** [1]	-	**496482**	-	-	3	3	1.2	8057
	7	1250	2.5	10	10	-10	50	NBR	**343N03** [1]	-	**496637**	22	Ex tc IIIC T95°C	3	3	1.2	8057

Notes:

1. With manual override

For this page	Port size	Orifice (mm)	Qn (l/min)	MOPD (bar)	Fluid Temp (°C)	Amb Temp (°C)
From	1/4"	7	1250	10	-10	-10
To	1/4"	7	1250	10	50	50

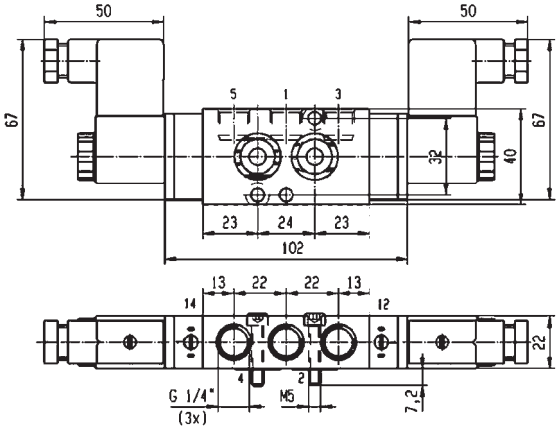

Drawing 8057

3/2-5/2 3 & 5 WAY PNEUMATIC VALVES FOR ACTUATOR CONTROL (NAMUR)

PILOT OPERATED

ANODIZED ALUMINIUM NAMUR

CONTROL BY ELECTRIC IMPULSE

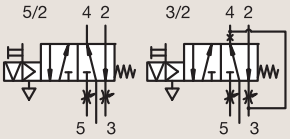

Port size BSP	Orifice Ø 1 mm	Flow factor Qn l/min	Operating Pressure Differential Min bar	Max (MOPD) AC bar	Max (MOPD) DC bar	Fluid Temp. Min °C	Fluid Temp. Max °C	Seat Seal	Parker LUCIFER® Valves Valve Ref.	Housing Ref.	Coil Ref.	ATEX Zone	Protection Mode	Power AC W	Power DC W	Coil Group	Dwg. No.
1/8" 1/4"	4	600	2	-	10	-25	80	FKM/NBR	**345N31** [12]	**4269**	**485400**	-	-	-	13	4.0	7295

Notes:

1. Pilot seat in FKM
2. With manual override

ANODIZED ALUMINIUM NAMUR

SOLENOID OPERATED - SPRING RETURN

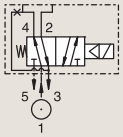

Port size BSP	Orifice Ø 1 mm	Flow factor Qn l/min	Operating Pressure Differential Min bar	Max (MOPD) AC bar	Max (MOPD) DC bar	Fluid Temp. Min °C	Fluid Temp. Max °C	Seat Seal	Parker LUCIFER® Valves Valve Ref.	Housing Ref.	Coil Ref.	ATEX Zone	Protection Mode	Power AC W	Power DC W	Coil Group	Dwg. No.
1/8" 1/4"	4	355	1	10	10	-10	75	NBR	**341L9504** [12]	**-**	**482605**	1-21	Ex mb IIC T4/T5	4	5	1.1	7009
	4	355	1	10	10	-10	75	NBR	**341L9504** [12]	**-**	**482606**	1-21	Ex mb IIC T4/T5	2	2.5	1.1	7009
	4	355	1	10	10	-10	75	NBR	**341L9504** [12]	**8993**	**488980**	-	-	2	2.5	1.1	7009
	4	355	1	10	10	-10	75	NBR	**341L9504** [12]	**8993**	**495865**	2-22	Ex nAc nCc IIC T5	2	2.5	1.1	7009
	4	355	1	10	10	-10	75	NBR	**341L9534** [12]	**2995**	**481865**	-	-	8	9	2.1/7.0	3990
	4	355	1	10	10	-10	75	NBR	**341L9534** [12]	**2995**	**495870**	2-22	Ex nAc nCc IIC T3/T4	8	9	2.1/7.0	3990
	4	355	1	10	10	-10	75	NBR	**341L9534** [12]	**-**	**495905**	1-21	Ex db mb IIC T4	8	8	2.1/7.0	3990

Notes:

1. Pilot seat in FKM
2. With manual override

For this page	Port size	Orifice (mm)	Qn (l/min)	MOPD (bar)	Fluid Temp (°C)	Amb Temp (°C)
From	1/8"-1/4"	4	355	10	-25	-25
To	1/8"-1/4"	4	600	10	80	50

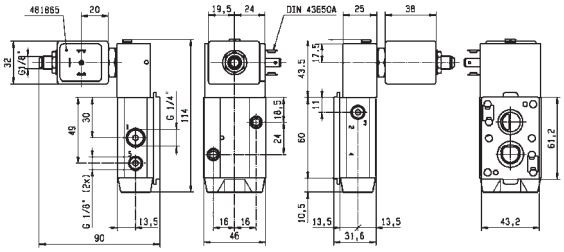

Drawing 7295

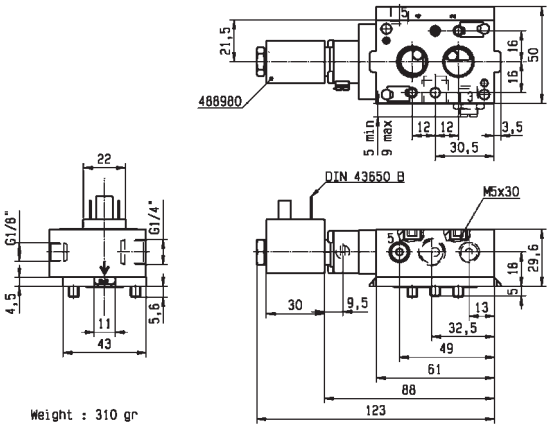

Drawing 7009

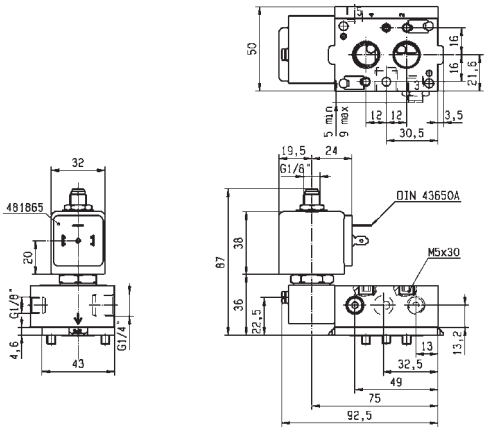

Drawing 3990

3/2-5/2 3 & 5 WAY PNEUMATIC VALVES FOR ACTUATOR CONTROL (NAMUR)

PILOT OPERATED

ANODIZED ALUMINIUM NAMUR

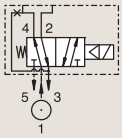

SOLENOID OPERATED - SPRING RETURN

Port size	Orifice Ø	Flow factor	Operating Pressure Differential			Fluid Temp.		Seat Seal	Parker LUCIFER® Valves			ATEX Zone	Protection Mode	Power		Coil Group	Dwg. No.
	1		Min	Max (MOPD)		Min	Max		Valve Ref.	Housing Ref.	Coil Ref.						
BSP	mm	Qn l/min	bar	AC bar	DC bar	°C	°C							AC W	DC W		
1/8" 1/4"	4	355	2	-	10	-10	55	NBR	**341L9594** [12]	**2995**	**483580.01**	0-20	Ex ia IIC T6	-	0.5 to 3	7.0	3992
	4	355	1	-	10	-10	75	NBR	**341L9594** [12]	**-**	**495910**	0-20	Ex ia IIC T4 to T6	-	0.3 to 3	7.0	3992
	4	355	2	-	10	-10	75	NBR	**341L9597** [23]	**2995**	**482740**	-	-	-	1.6	6.0/8.0	8025
	4	355	2	10	10	-10	75	NBR	**341L9597** [23]	**-**	**495900**	1-21	Ex db mb IIC T4 to T6	2.5	2	6.0/8.0	8025
	4	355	2	-	10	-10	75	NBR	**341L9597** [23]	**-**	**495910**	0-20	Ex ia IIC T4 to T6	-	0.3 to 3	6.0/8.0	8025
	4	355	2	-	10	-10	75	NBR	**341L9597** [23]	**2995**	**496125**	2-22	Ex nAc nCc IIC T5/T6	-	1.6	6.0/8.0	8025
	4	355	2	-	10	-25	55	NBR	**341L9598** [3]	**2995**	**483580.01**	0-20	Ex ia IIC T6	-	0.5 to 3	7.0	3992

Notes:

1. Pilot seat in FKM
2. With manual override
3. Pilot seat in PUR

For this page	Port size	Orifice (mm)	Qn (l/min)	MOPD (bar)	Fluid Temp (°C)	Amb Temp (°C)
From	1/8"-1/4"	4	355	10	-25	-10
To	1/8"-1/4"	4	355	10	75	50

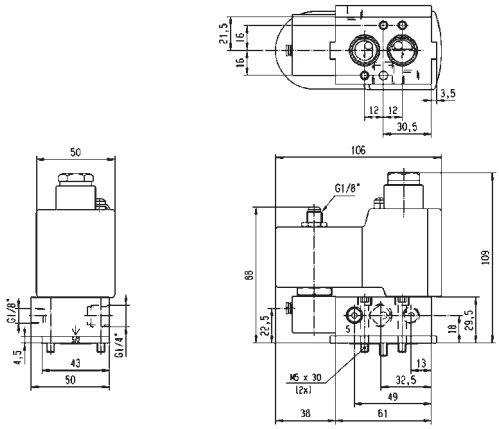

Drawing 3992

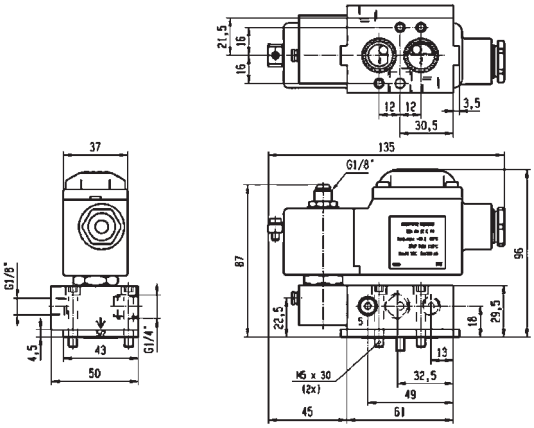

Drawing 8025

3/2

3 & 5 WAY PNEUMATIC VALVES FOR ACTUATOR CONTROL (NAMUR)

EXTERNALLY OPERATED

ANODIZED ALUMINIUM NAMUR

AIR OPERATED - SPRING RETURN

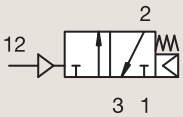

Port size	Orifice Ø	Flow factor	Operating Pressure Differential			Fluid Temp.		Seat Seal	Parker LUCIFER® Valves			ATEX Zone	Protection Mode	Power		Coil Group	Dwg. No.
	1		Min	Max (MOPD)		Min	Max		Valve Ref.	Housing Ref.	Coil Ref.						
BSP	mm	Qn l/min	bar	AC bar	DC bar	°C	°C							AC W	DC W		
1/4"	7	1250	2.5	10	10	-10	50	NBR	531N03	-	-	-	-	-	-	-	8058
1/2"	12	3000	2.5	10	10	-10	50	NBR	531N04	-	-	-	-	-	-	-	8061

For this page	Port size	Orifice (mm)	Qn (l/min)	MOPD (bar)	Fluid Temp (°C)	Amb Temp (°C)
From	1/4"	7	1250	10	-10	-10
To	1/2"	12	3000	10	50	50

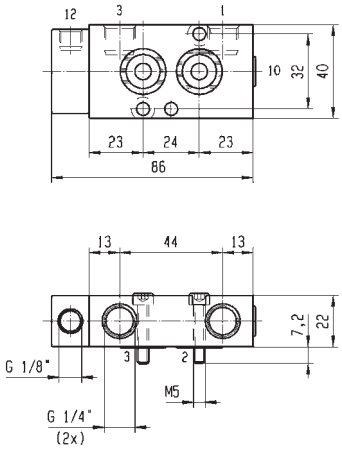

Drawing 8058

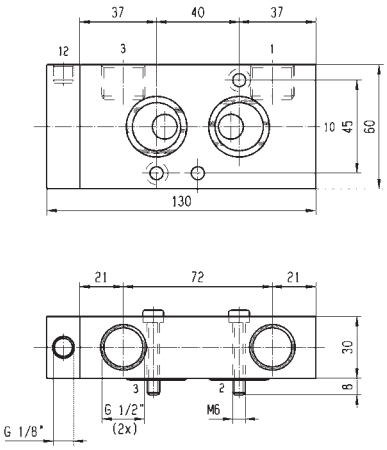

Drawing 8061

3/2-5/2 3 & 5 WAY PNEUMATIC VALVES FOR ACTUATOR CONTROL (NAMUR)

EXTERNALLY OPERATED

ANODIZED ALUMINIUM NAMUR

AIR OPERATED - SPRING RETURN

5/2 FUNCTION 4 2 3/2 FUNCTION 4 2

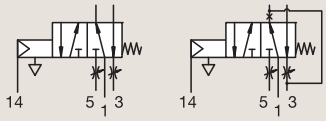

Port size BSP	Orifice Ø 1 mm	Flow factor Qn l/min	Operating Pressure Differential Min bar	Max (MOPD) AC bar	Max (MOPD) DC bar	Fluid Temp. Min °C	Fluid Temp. Max °C	Seat Seal	Parker LUCIFER® Valves Valve Ref.	Housing Ref.	Coil Ref.	ATEX Zone	Protection Mode	Power AC W	Power DC W	Coil Group	Dwg. No.
1/8"-1/4"	4	600	2	10	10	-25	80	NBR	**541N01**	-	-	-	-	-	-	-	7309
	4	600	2	10	10	-40	50	NBR	**541N0108**	-	-	-	-	-	-	-	7309

For this page	Port size	Orifice (mm)	Qn (l/min)	MOPD (bar)	Fluid Temp (°C)	Amb Temp (°C)
From	1/8"-1/4"	4	600	10	-40	-40
To	1/8"-1/4"	4	600	10	80	50

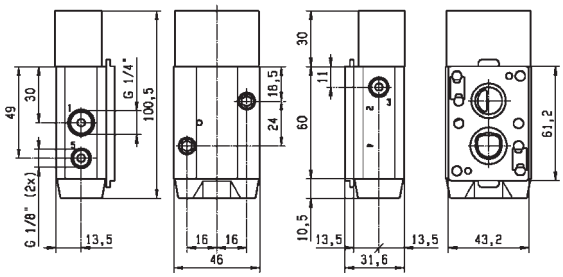

Drawing 7309

5/2 3 & 5 WAY PNEUMATIC VALVES FOR ACTUATOR CONTROL (NAMUR)

EXTERNALLY OPERATED

ANODIZED ALUMINIUM NAMUR

AIR OPERATED - SPRING RETURN

5/2 FUNCTION

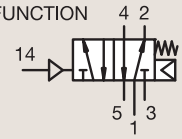

Port size BSP	Orifice Ø 1 mm	Flow factor Qn l/min	Operating Pressure Differential Min bar	Max (MOPD) AC bar	Max (MOPD) DC bar	Fluid Temp. Min °C	Fluid Temp. Max °C	Seat Seal	Parker LUCIFER® Valves Valve Ref.	Housing Ref.	Coil Ref.	ATEX Zone	Protection Mode	Power AC W	Power DC W	Coil Group	Dwg. No.
1/4"	7	1250	2.5	10	10	-10	50	NBR	**541N03**	-	-	-	-	-	-	-	8064
1/2"	12	3000	2.5	10	10	-10	50	NBR	**541N04**	-	-	-	-	-	-	-	8066

ANODIZED ALUMINIUM NAMUR

AIR OPERATED AND RETURN

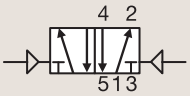

Port size BSP	Orifice Ø 1 mm	Flow factor Qn l/min	Operating Pressure Differential Min bar	Max (MOPD) AC bar	Max (MOPD) DC bar	Fluid Temp. Min °C	Fluid Temp. Max °C	Seat Seal	Parker LUCIFER® Valves Valve Ref.	Housing Ref.	Coil Ref.	ATEX Zone	Protection Mode	Power AC W	Power DC W	Coil Group	Dwg. No.
1/4"	7	1250	2.5	10	10	-10	50	NBR	**547N03**	-	-	-	-	-	-	-	8059

For this page	Port size	Orifice (mm)	Qn (l/min)	MOPD (bar)	Fluid Temp (°C)	Amb Temp (°C)
From	1/4"	7	1250	10	-10	-10
To	1/2"	12	3000	10	50	50

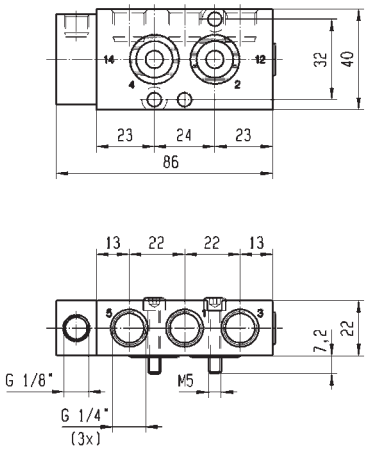

Drawing 8064

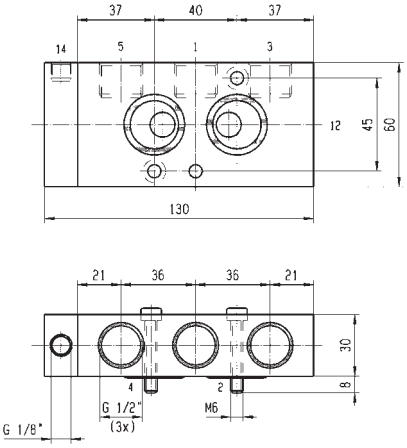

Drawing 8066

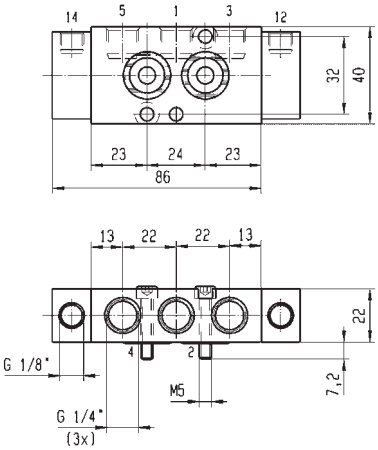

Drawing 8059

5/3 3 & 5 WAY PNEUMATIC VALVES FOR ACTUATOR CONTROL (NAMUR)

EXTERNALLY OPERATED

ANODIZED ALUMINIUM NAMUR

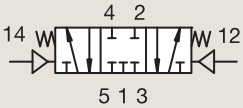

W1 CLOSED CENTER POSITION

Port size	Orifice Ø	Flow factor	Operating Pressure Differential			Fluid Temp.		Seat Seal	Parker LUCIFER® Valves			ATEX Zone	Protection Mode	Power		Coil Group	Dwg. No.
	1		Min	Max (MOPD)		Min	Max		Valve Ref.	Housing Ref.	Coil Ref.						
BSP	mm	Qn l/min	bar	AC bar	DC bar	°C	°C							AC W	DC W		
1/4''	7	1250	2.5	10	10	-10	50	NBR	**542N03**	**-**	**-**	-	-	-	-	-	8059

For this page	Port size	Orifice (mm)	Qn (l/min)	MOPD (bar)	Fluid Temp (°C)	Amb Temp (°C)
From	1/4"	7	1250	10	-10	-10
To	1/4"	7	1250	10	50	50

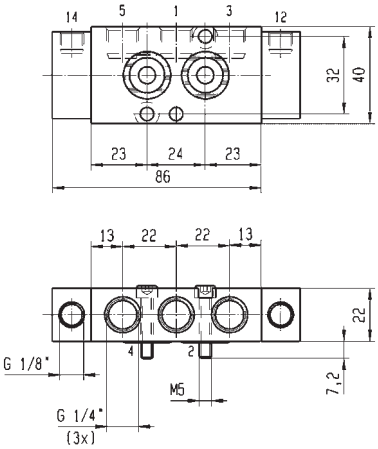

Drawing 8059

316L STAINLESS STEEL 3 & 5 WAY VALVES FOR ACTUATOR CONTROL (PIPE MOUNTING AND NAMUR)

3/2
5/2

Actuation	Body	Function	Port Size	Orifice (mm)	Qn (l/min)	MOPD (bar)	Max Fluid Temp. (°C)	Page Parker Valves	Page Parker LUCIFER® Valves
Direct Operated	316L Stainless St./Pipe mounting	Universal	1/4''	2 to 6	680	12	80	-	376
			3/8''	6	680	10	75	-	382
	316L Stainless St./Sub-base mounting	Normally Closed	5 mm	2.5	220	14	80	-	384
			6 mm	2.5	220	10	75	-	384
		Universal	1/4''	6	680	10	65	-	384
	316L Stainless St./ NAMUR	Normally Closed	3/8''	6	680	10	75	-	386
Pilot Operated	316L Stainless St./Pipe mounting	Normally Closed	3/8''	8	1400	10	80	-	388
	316L Stainless St./Pipe mounting/Spool	Normally Closed	3/8''	8	1400	10	80	-	388
		Dual Solenoids	3/8''	8	1400	10	80	-	392
	316L Stainless St./ NAMUR/Spool	Normally Closed	3/8''-1/4''	8	1400	10	80	-	394
		Solenoid operated - spring return	3/8''-1/4''	8	1400	10	80	-	394
		Dual Solenoids	3/8''-1/4''	8	1400	10	80	-	398
Manual Reset	316L Stainless St./Pipe mounting	Universal	1/4''	6	680	10	75	-	400
			3/8''	6	680	10	65	-	404

3/2

316L STAINLESS STEEL 3 & 5 WAY VALVES FOR ACTUATOR CONTROL (PIPE MOUNTING AND NAMUR)

DIRECT OPERATED

316L STAINLESS ST. PIPE MOUNTING

UNIVERSAL

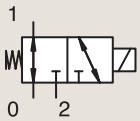

Port size	Orifice Ø 1 mm	Flow factor Qn l/min	Operating Pressure Differential Min bar	Max (MOPD) AC bar	Max (MOPD) DC bar	Fluid Temp. Min °C	Fluid Temp. Max °C	Seat Seal	Parker LUCIFER® Valves: Valve Ref.	Housing Ref.	Coil Ref.	ATEX Zone	Protection Mode	Power AC W	Power DC W	Coil Group	Dwg. No.
1/4" NPT	2	140	0	12	12	-25	65	FKM	**U133V5595** [1]	-	**492310**	1-21	Ex eb mb II T3 to T6	6	6	9.0/10.1	6713
	2	140	0	-	12	-25	75	FKM	**U133V5595** [1]	-	**492965.01**	0-20	Ex ia IIC T6	-	0.3 to 3	9.0/10.1	6713
	2	140	0	12	12	-25	65	FKM	**U133V5595** [1]	-	**496800**	1-21	Ex db mb IIC T4	8	8	9.0/10.1	6713
	2	140	0	12	12	-25	80	FKM	**U133V55951D** [1]	-	**483270.02**	1-21	Ex db IIC T4 to T6	8	8	11.0	6714
	2	140	0	12	12	-25	65	FKM	**U133V7595**	-	**492310**	1-21	Ex eb mb II T3 to T6	6	6	9.0/10.1	8166
	2	140	0	-	12	-25	60	FKM	**U133V7595**	-	**492965.01**	0-20	Ex ia IIC T6	-	0.3 to 3	9.0/10.1	8166
	2	140	0	-	12	-25	65	FKM	**U133V7595**	-	**496565**	0-20	Ex ia IIC T4 to T6	-	0.3	9.0/10.1	8166
	2.5	220	0	-	8.5	-25	75	FKM	**U133V5695** [1]	-	**492210**	1-21	Ex eb mb IIC T5/T6	-	1.8	9.0/10.1	6713
	2.5	220	0	-	8.5	-25	75	FKM	**U133V5695** [1]	-	**492965.01**	0-20	Ex ia IIC T6	-	1.8	9.0/10.1	6713
	2.5	220	0	8.5	8.5	-25	75	FKM	**U133V5695** [1]	-	**496800**	1-21	Ex db mb IIC T4	8	8	9.0/10.1	6713
	2.5	220	0	8.5	8.5	-10	75	FKM	**U133V56951D** [12]	-	**483270.02**	1-21	Ex db IIC T4 to T6	8	8	11.0	6714
	2.5	220	0	8.5	8.5	-25	75	FKM	**U133V7695**	-	**492310**	1-21	Ex eb mb II T3 to T6	6	6	9.0/10.1	8166
	2.5	220	0	-	8.5	-25	65	FKM	**U133V7695**	-	**492965.01**	0-20	Ex ia IIC T6	-	0.3 to 3	9.0/10.1	8166
	2.5	220	0	-	8.5	-25	65	FKM	**U133V7695**	-	**496565**	0-20	Ex ia IIC T4 to T6	-	0.3	9.0/10.1	8166

Notes:

1. Valve delivered with an individual material traceability certificate (3.1 following EN10204)
2. Valve only compatible with hydraulic oil and air/neutral gases

For this page	Port size	Orifice (mm)	Qn (l/min)	MOPD (bar)	Fluid Temp (°C)	Amb Temp (°C)
From	1/4"	2	140	8.5	-25	-25
To	1/4"	2.5	220	12	80	50

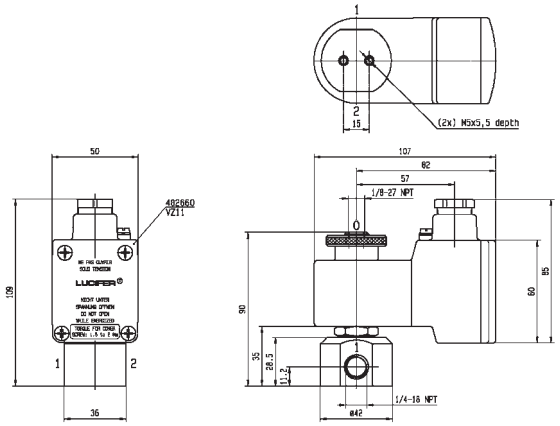

Drawing 6713

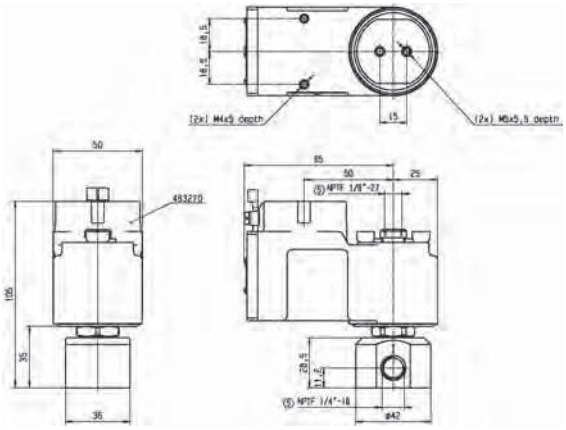

Drawing 6714

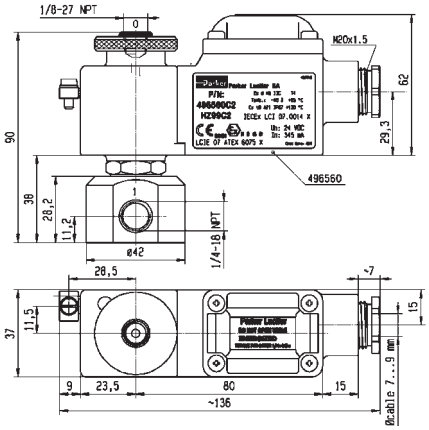

Drawing 8166

3/2

316L STAINLESS STEEL 3 & 5 WAY VALVES FOR ACTUATOR CONTROL (PIPE MOUNTING AND NAMUR)

DIRECT OPERATED

316L STAINLESS ST. PIPE MOUNTING

UNIVERSAL

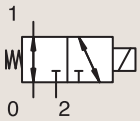

Port size	Orifice Ø 1 mm	Flow factor Qn l/min	Operating Pressure Differential Min bar	Max (MOPD) AC bar	Max (MOPD) DC bar	Fluid Temp. Min °C	Fluid Temp. Max °C	Seat Seal	Parker LUCIFER® Valves Valve Ref.	Housing Ref.	Coil Ref.	ATEX Zone	Protection Mode	Power AC W	Power DC W	Coil Group	Dwg. No.
1/4" NPTF	6	680	0	10	10	-25	65	NBR	U133X5152 13	-	492310	1-21	Ex eb mb II T3 to T6	6	6	10.1/10.2	7770
	6	680	0	10	10	-25	65	NBR	U133X5152 13	-	496700	1-21	Ex db mb IIC T4 to T6	6	6	10.1/10.2	7770
	6	680	0	-	10	-25	65	NBR	U133X5156 23	-	492965.01	0-20	Ex ia IIC T6	-	0.3 to 3	9.0/10.1/10.2	7770
	6	680	0	10	10	-25	65	NBR	U133X5156 23	-	496700	1-21	Ex db mb IIC T4 to T6	6	6	9.0/10.1/10.2	7770
	6	680	0	10	10	-25	75	NBR	U133X51561D 23	-	483270.02	1-21	Ex d IIC T4 to T6	8	8	11.0	7011
	6	680	0	10	10	-25	65	NBR	U133X5192 12	-	492310	1-21	Ex eb mb II T3 to T6	6	6	10.1	6904
	6	680	0	10	10	-25	65	NBR	U133X5192 12	-	496700	1-21	Ex db mb IIC T4 to T6	6	6	10.1	6904
	6	680	0	-	10	-25	65	NBR	U133X5196 2	-	492210	1-21	Ex eb mb IIC T5/T6	-	1.8	9.0/10.1/10.2	6904
	6	680	0	-	10	-25	65	NBR	U133X5196 2	-	492965.01	0-20	Ex ia IIC T6	-	0.3 to 3	9.0/10.1/10.2	6904
	6	680	0	10	10	-25	65	NBR	U133X5196 2	-	496700	1-21	Ex db mb IIC T4 to T6	6	6	9.0/10.1/10.2	6904

Notes:

1. DC voltage only (or coil with rectifier). Minimum drop off voltage is 15% of nominal voltage (former DIN 19251)
2. Valve delivered with an individual material traceability certificate (3.1 following EN10204)
3. With manual override

For this page	Port size	Orifice (mm)	Qn (l/min)	MOPD (bar)	Fluid Temp (°C)	Amb Temp (°C)
From	1/4"	6	680	10	-25	-25
To	1/4"	6	680	10	75	65

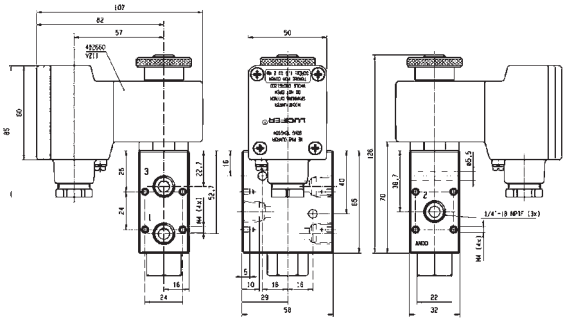

Drawing 7770

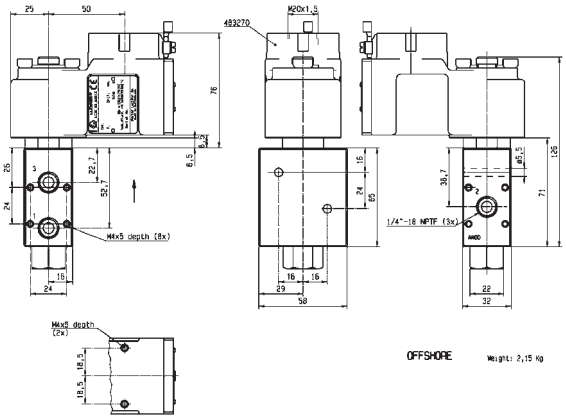

Drawing 7011

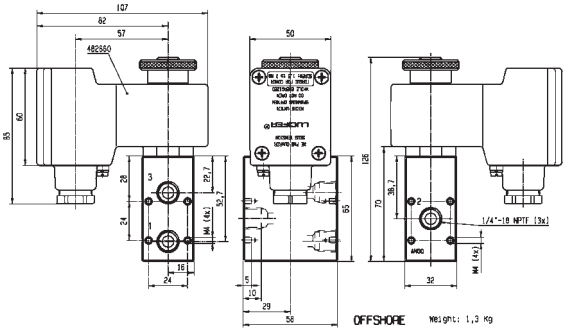

Drawing 6904

3/2

316L STAINLESS STEEL 3 & 5 WAY VALVES FOR ACTUATOR CONTROL (PIPE MOUNTING AND NAMUR)

DIRECT OPERATED

316L STAINLESS ST. PIPE MOUNTING

UNIVERSAL

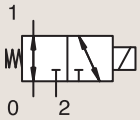

Port size	Orifice Ø 1 mm	Flow factor Qn l/min	Operating Pressure Differential Min bar	Max (MOPD) AC bar	Max (MOPD) DC bar	Fluid Temp. Min °C	Fluid Temp. Max °C	Seat Seal	Parker LUCIFER® Valves Valve Ref.	Housing Ref.	Coil Ref.	ATEX Zone	Protection Mode	Power AC W	Power DC W	Coil Group	Dwg. No.
1/4" NPTF	6	680	0	10	10	-25	65	NBR	**U133X51961D** [1]	-	**483270.02**	1-21	Ex db IIC T4 to T6	8	8	11.0	7038
	6	680	0	10	10	-25	65	NBR	**U133X7156** [2]	-	**496700**	1-21	Ex db mb IIC T4 to T6	6	6	9.0/10.1/10.2	8168
	6	680	0	-	10	-25	65	NBR	**U133X7196**	-	**492210**	1-21	Ex eb mb IIC T5/T6	-	1.8	9.0/10.1/10.2	8169
	6	680	0	-	10	-25	65	NBR	**U133X7196**	-	**492965.01**	0-20	Ex ia IIC T6	-	0.3 to 3	9.0/10.1/10.2	8169
	6	680	0	10	10	-25	65	NBR	**U133X7196**	-	**496700**	1-21	Ex db mb IIC T4 to T6	6	6	9.0/10.1/10.2	8169

Notes:

1. Valve delivered with an individual material traceability certificate (3.1 following EN10204)
2. With manual override

For this page	Port size	Orifice (mm)	Qn (l/min)	MOPD (bar)	Fluid Temp (°C)	Amb Temp (°C)
From	1/4"	6	680	10	-25	-25
To	1/4"	6	680	10	65	65

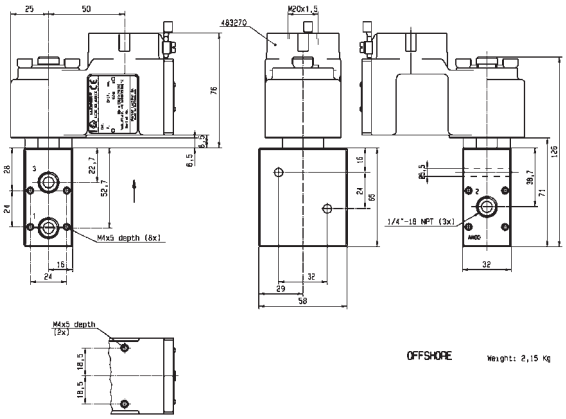

Drawing 7038

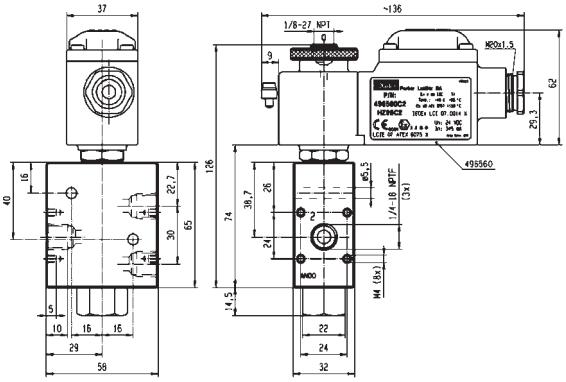

Drawing 8168

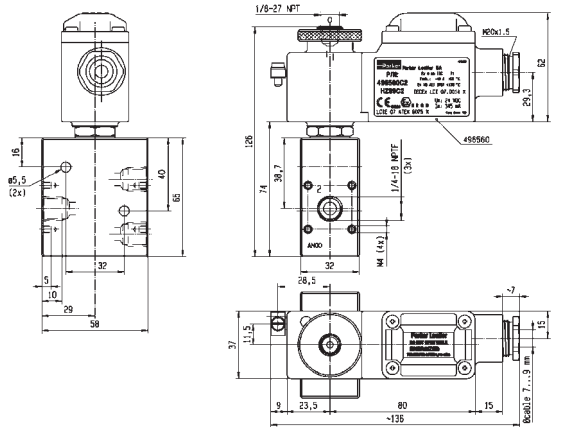

Drawing 8169

3/2

316L STAINLESS STEEL 3 & 5 WAY VALVES FOR ACTUATOR CONTROL (PIPE MOUNTING AND NAMUR)

DIRECT OPERATED

316L STAINLESS ST. PIPE MOUNTING

UNIVERSAL

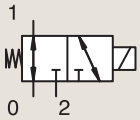

Port size	Orifice Ø 1 mm	Flow factor Qn l/min	Operating Pressure Differential Min bar	Max (MOPD) AC bar	Max (MOPD) DC bar	Fluid Temp. Min °C	Fluid Temp. Max °C	Seat Seal	Parker LUCIFER® Valves Valve Ref.	Housing Ref.	Coil Ref.	ATEX Zone	Protection Mode	Power AC W	Power DC W	Coil Group	Dwg. No.
3/8" NPTF	6	680	0	10	10	-25	65	NBR	**U133X5296** [1]	-	**492310**	1-21	Ex eb mb II T3 to T6	6	6	9.0/10.1/10.2	7669
	6	680	0	-	10	-25	65	NBR	**U133X5296** [1]	-	**492965.01**	0-20	Ex ia IIC T6	-	0.3 to 3	9.0/10.1/10.2	7669
	6	680	0	10	10	-25	65	NBR	**U133X5296** [1]	-	**496700**	1-21	Ex db mb IIC T4 to T6	6	6	9.0/10.1/10.2	7669
	6	680	0	10	10	-25	75	NBR	**U133X52961D** [1]	-	**483270.02**	1-21	Ex db IIC T4 to T6	8	8	11.0	7670

Notes:

1. Valve delivered with an individual material traceability certificate (3.1 following EN10204)

For this page	Port size	Orifice (mm)	Qn (l/min)	MOPD (bar)	Fluid Temp (°C)	Amb Temp (°C)
From	3/8''	6	680	10	-25	-25
To	3/8''	6	680	10	75	65

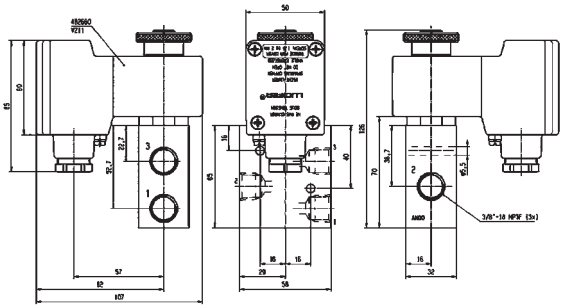

Drawing 7669

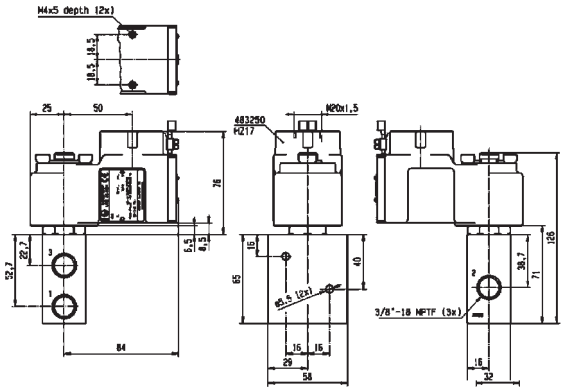

Drawing 7670

3/2

316L STAINLESS STEEL 3 & 5 WAY VALVES FOR ACTUATOR CONTROL (PIPE MOUNTING AND NAMUR)

DIRECT OPERATED

316L STAINLESS ST. SUB-BASE MOUNTING

NORMALLY CLOSED

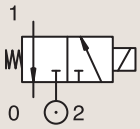

Port size	Orifice Ø 1 mm	Flow factor Qn l/min	Operating Pressure Differential Min bar	Max (MOPD) AC bar	Max (MOPD) DC bar	Fluid Temp. Min °C	Fluid Temp. Max °C	Seat Seal	Parker LUCIFER® Valves Valve Ref.	Housing Ref.	Coil Ref.	ATEX Zone	Protection Mode	Power AC W	Power DC W	Coil Group	Dwg. No.
SB	2.5	220	0	-	12	-25	65	FKM	U131F5695 [1]	-	492210	1-21	Ex eb mb IIC T5/T6	-	1.8	9.0/10.1	3782
	2.5	220	0	-	12	-25	65	FKM	U131F5695 [1]	-	492965.01	0-20	Ex ia IIC T6	-	0.3 to 3	9.0/10.1	3782
	2.5	220	0	12	12	-25	75	FKM	U131F5695 [1]	-	496800	1-21	Ex db mb IIC T4	8	8	9.0/10.1	3782
	2.5	220	0	14	14	-10	80	FKM	U131F56951D [12]	-	483270.02	1-21	Ex db IIC T4 to T6	8	8	11.0	3783
SB	2.5	220	0	10	10	-25	75	FKM	U131F5295	-	496560	1-21	Ex db mb IIC T4	8	8	9.0/10.1	8174

Notes:

1. Valve delivered with an individual material traceability certificate (3.1 following EN10204)
2. Valve only compatible with hydraulic oil and air/neutral gases

316L STAINLESS ST. SUB-BASE MOUNTING

UNIVERSAL

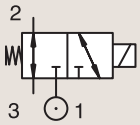

Port size	Orifice Ø 1 mm	Flow factor Qn l/min	Operating Pressure Differential Min bar	Max (MOPD) AC bar	Max (MOPD) DC bar	Fluid Temp. Min °C	Fluid Temp. Max °C	Seat Seal	Parker LUCIFER® Valves Valve Ref.	Housing Ref.	Coil Ref.	ATEX Zone	Protection Mode	Power AC W	Power DC W	Coil Group	Dwg. No.
1/4" NPTF	6	680	0	10	10	-25	65	FKM	U133X5195 [1]	-	492310	1-21	Ex eb mb II T3 to T6	6	6	9.0/10.1/10.2	3572
	6	680	0	10	10	-25	65	FKM	U133X5195 [1]	-	496700	1-21	Ex db mb IIC T4 to T6	6	6	9.0/10.1/10.2	3572

Notes:

1. Valve delivered with an individual material traceability certificate (3.1 following EN10204)

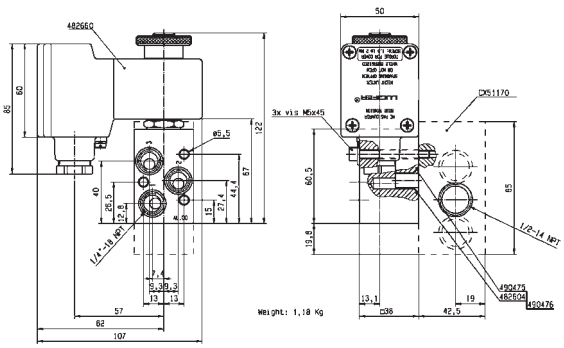

Drawing 3572

For this page	Port size	Orifice (mm)	Qn (l/min)	MOPD (bar)	Fluid Temp (°C)	Amb Temp (°C)
From	SB	2.5	220	10	-25	-25
To	SB	6	680	14	80	50

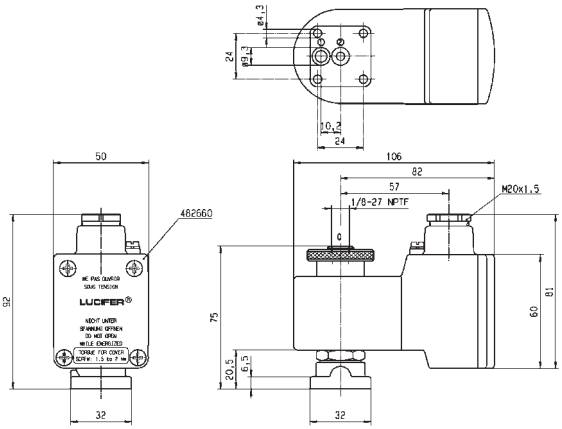

Drawing 3782

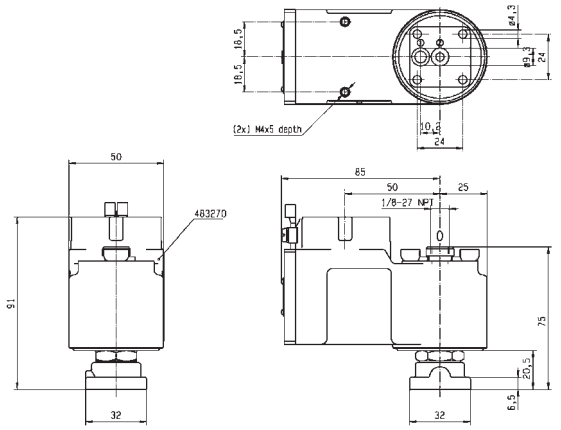

Drawing 3783

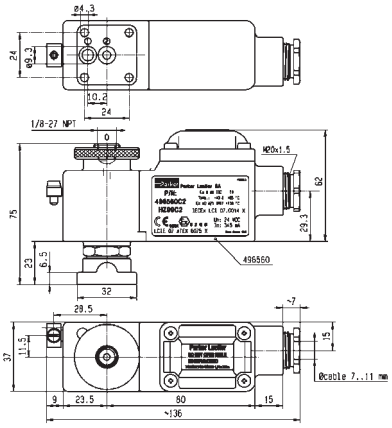

Drawing 8174

3/2

316L STAINLESS STEEL 3 & 5 WAY VALVES FOR ACTUATOR CONTROL (PIPE MOUNTING AND NAMUR)

DIRECT OPERATED

316L STAINLESS ST. SUB-BASE MOUNTING

UNIVERSAL

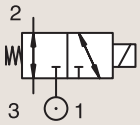

Port size	Orifice Ø 1 mm	Flow factor Qn l/min	Operating Pressure Differential Min bar	Max (MOPD) AC bar	Max (MOPD) DC bar	Fluid Temp. Min °C	Fluid Temp. Max °C	Seat Seal	Parker LUCIFER® Valves: Valve Ref.	Housing Ref.	Coil Ref.	ATEX Zone	Protection Mode	Power AC W	Power DC W	Coil Group	Dwg. No.
1/4" NPTF	6	680	0	10	10	-25	65	FKM	**U133X51951D** [1]	-	**483270**	1-21	Ex db IIC T4 to T6	8	8	11.0	3688
	6	680	0	10	10	-25	65	FKM	**U133X51951D** [1]	-	**483270.02**	1-21	Ex db IIC T4 to T6	8	8	11.0	3688
	6	680	0	-	10	-25	65	FKM	**U133X7195**	-	**492210**	1-21	Ex eb mb IIC T5/T6	-	1.8	9.0/10.1/10.2	8172
	6	680	0	-	10	-25	65	FKM	**U133X7195**	-	**492965.01**	0-20	Ex ia IIC T6	-	0.3 to 3	9.0/10.1/10.2	8172
	6	680	0	10	10	-25	65	FKM	**U133X7195**	-	**496700**	1-21	Ex db mb IIC T4 to T6	6	6	9.0/10.1/10.2	8172

Notes:

1. Valve delivered with an individual material traceability certificate (3.1 following EN10204)

316L STAINLESS ST. NAMUR

NORMALLY CLOSED

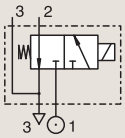

Port size	Orifice Ø 1 mm	Flow factor Qn l/min	Operating Pressure Differential Min bar	Max (MOPD) AC bar	Max (MOPD) DC bar	Fluid Temp. Min °C	Fluid Temp. Max °C	Seat Seal	Parker LUCIFER® Valves: Valve Ref.	Housing Ref.	Coil Ref.	ATEX Zone	Protection Mode	Power AC W	Power DC W	Coil Group	Dwg. No.
3/8" NPT	6	680	0	10	10	-25	65	NBR	**U131X1201** [1]	-	**492310**	1-21	Ex eb mb II T3 to T6	6	6	9.0/10.1/10.2	7668
	6	680	0	-	10	-25	75	NBR	**U131X1201** [1]	-	**492965.01**	0-20	Ex ia IIC T6	-	0.3 to 3	9.0/10.1/10.2	7668
	6	680	0	10	10	-25	65	NBR	**U131X1201** [1]	-	**496700**	1-21	Ex db mb IIC T4 to T6	6	6	9.0/10.1/10.2	7668

Notes:

1. Valve delivered with an individual material traceability certificate (3.1 following EN10204)

For this page	Port size	Orifice (mm)	Qn (l/min)	MOPD (bar)	Fluid Temp (°C)	Amb Temp (°C)
From	1/4"	6	680	10	-25	-25
To	3/8"	6	680	10	75	65

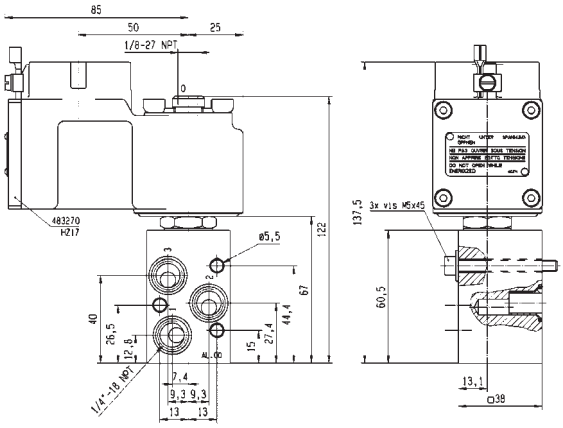

Drawing 3688

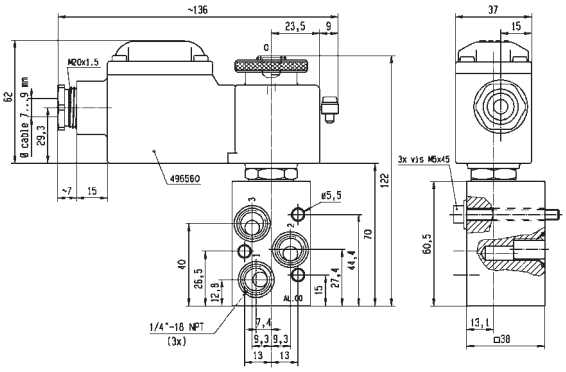

Drawing 8172

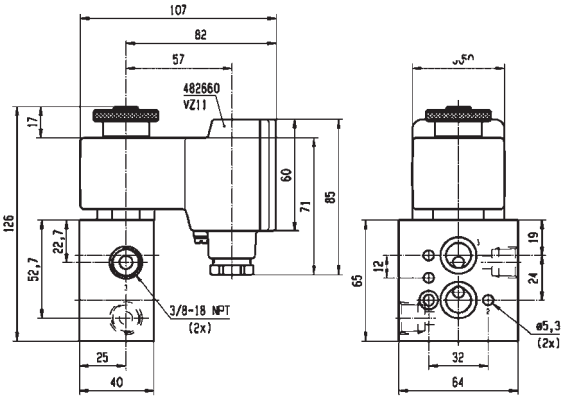

Drawing 7668

5/2

316L STAINLESS STEEL 3 & 5 WAY VALVES FOR ACTUATOR CONTROL (PIPE MOUNTING AND NAMUR)

PILOT OPERATED

316L STAINLESS ST. PIPE MOUNTING

NORMALLY CLOSED

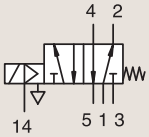

Port size	Orifice Ø 1 mm	Flow factor Qn l/min	Operating Pressure Differential Min bar	Max (MOPD) AC bar	Max (MOPD) DC bar	Fluid Temp. Min °C	Fluid Temp. Max °C	Seat Seal	Parker LUCIFER® Valves Valve Ref.	Housing Ref.	Coil Ref.	ATEX Zone	Protection Mode	Power AC W	Power DC W	Coil Group	Dwg. No.
3/8" NPT	8	1400	2	10	10	-25	80	NBR	U441P3250 12	4270	481000	-	-	8	8	2.1	7565
	8	1400	2	10	10	-25	80	NBR	U441P3250 12	2995	481865	-	-	8	9	2.1	7565

Notes:

1. Pilot seat in FKM
2. Valve with external pilot pressure minimum 4 bar

316L STAINLESS ST. PIPE MOUNTING

NORMALLY CLOSED

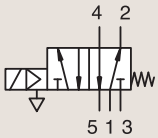

Port size	Orifice Ø 1 mm	Flow factor Qn l/min	Operating Pressure Differential Min bar	Max (MOPD) AC bar	Max (MOPD) DC bar	Fluid Temp. Min °C	Fluid Temp. Max °C	Seat Seal	Parker LUCIFER® Valves Valve Ref.	Housing Ref.	Coil Ref.	ATEX Zone	Protection Mode	Power AC W	Power DC W	Coil Group	Dwg. No.
1/4" 1/8" NPT	8	1400	2	10	10	-25	80	NBR	U341P0250 123	8993	481045	-	-	2	2.5	1.1	7578
	8	1400	2	10	10	-25	80	NBR	U341P0250 123	-	482606	1-21	Ex mb IIC T4/T5	2	2.5	1.1	7578
1/4" 3/8" NPT	8	1400	2	10	10	-25	80	NBR	U341P3250 1	4270	481000	-	-	8	8	2.1	7558
	8	1400	2	10	10	-25	80	NBR	U341P3250 1	2995	481865	-	-	8	9	2.1	7558
	8	1400	2	10	10	-25	80	NBR	U341P3250 1	2995	492453	-	-	8	9	2.1	7558

Notes:

1. Pilot seat in FKM
2. With captured exhaust
3. With manual override

For this page	Port size	Orifice (mm)	Qn (l/min)	MOPD (bar)	Fluid Temp (°C)	Amb Temp (°C)
From	3/8"	8	1400	10	-25	-25
To	3/8"	8	1400	10	80	50

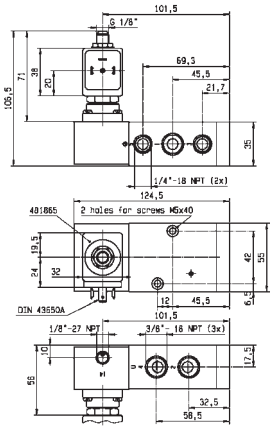

Drawing 7565

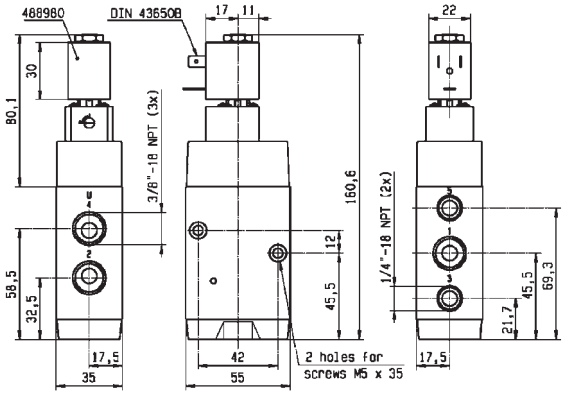

Drawing 7578

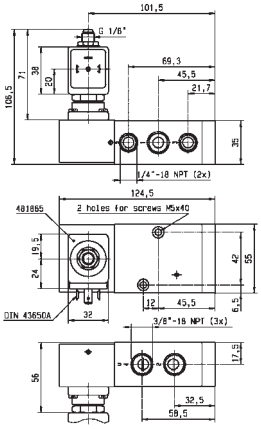

Drawing 7558

5/2

316L STAINLESS STEEL 3 & 5 WAY VALVES FOR ACTUATOR CONTROL (PIPE MOUNTING AND NAMUR)

PILOT OPERATED

316L STAINLESS ST. PIPE MOUNTING

NORMALLY CLOSED

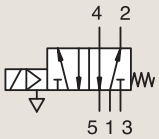

Port size	Orifice Ø 1 mm	Flow factor Qn l/min	Operating Pressure Differential Min bar	Max (MOPD) AC bar	Max (MOPD) DC bar	Fluid Temp. Min °C	Fluid Temp. Max °C	Seat Seal	Parker LUCIFER® Valves Valve Ref.	Housing Ref.	Coil Ref.	ATEX Zone	Protection Mode	Power AC W	Power DC W	Coil Group	Dwg. No.
3/8" NPT	8	1400	2	-	10	-25	55	NBR	U341P3292 [1]	2995	483580.01	0-20	Ex ia IIC T6	-	0.5 to 3	7.0	7560
	8	1400	2	10	10	-25	75	NBR	U341P3295 [1]	-	492310	1-21	Ex eb mb II T3 to T6	6	6	9.0/10.1	7561
	8	1400	2	-	10	-25	75	NBR	U341P3295 [1]	-	492965.01	0-20	Ex ia IIC T6	-	0.3 to 3	9.0/10.1	7561

Notes:

1. Pilot seat in FKM

For this page	Port size	Orifice (mm)	Qn (l/min)	MOPD (bar)	Fluid Temp (°C)	Amb Temp (°C)
From	3/8''	8	1400	10	-25	-25
To	3/8''	8	1400	10	75	50

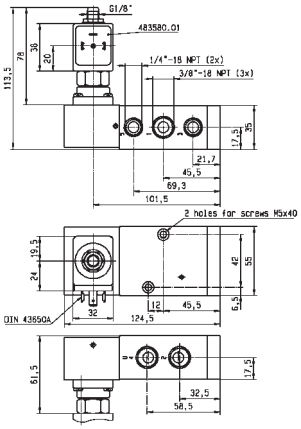

Drawing 7560

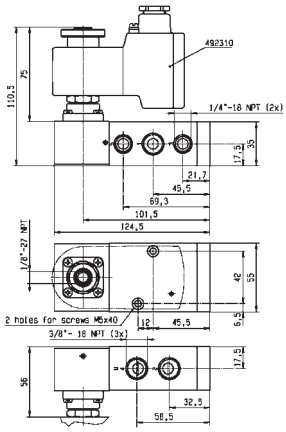

Drawing 7561

5/2

316L STAINLESS STEEL 3 & 5 WAY VALVES FOR ACTUATOR CONTROL (PIPE MOUNTING AND NAMUR)

PILOT OPERATED

316L STAINLESS ST. PIPE MOUNTING

DUAL SOLENOIDS

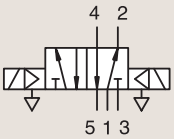

Port size	Orifice Ø 1 mm	Flow factor Qn l/min	Operating Pressure Differential Min bar	Max (MOPD) AC bar	Max (MOPD) DC bar	Fluid Temp. Min °C	Fluid Temp. Max °C	Seat Seal	Parker LUCIFER® Valves Valve Ref.	Housing Ref.	Coil Ref.	ATEX Zone	Protection Mode	Power AC W	Power DC W	Coil Group	Dwg. No.
3/8" NPT	8	1400	2	10	10	-25	80	NBR	U347P3250 [1]	4270	481000	-	-	8	8	2.1	7563
	8	1400	2	10	10	-25	80	NBR	U347P3250 [1]	-	483371	1-21	Ex eb IIC T4	8	8	2.1	7563
	8	1400	2	10	10	-25	75	NBR	U347P3295 [1]	-	492310	1-21	Ex eb mb II T3 to T6	6	6	9.0/10.1	7564
	8	1400	2	10	10	-25	75	NBR	U347P3295 [1]	-	496800	1-21	Ex db mb IIC T4	8	8	9.0/10.1	7564

Notes:

1. Pilot seat in FKM

For this page	Port size	Orifice (mm)	Qn (l/min)	MOPD (bar)	Fluid Temp (°C)	Amb Temp (°C)
From	3/8''	8	1400	10	-25	-25
To	3/8''	8	1400	10	80	50

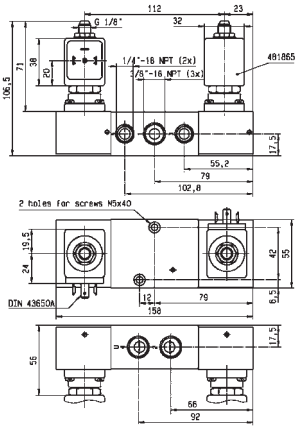

Drawing 7563

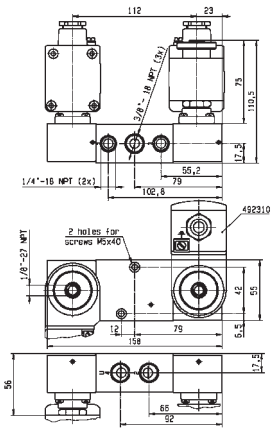

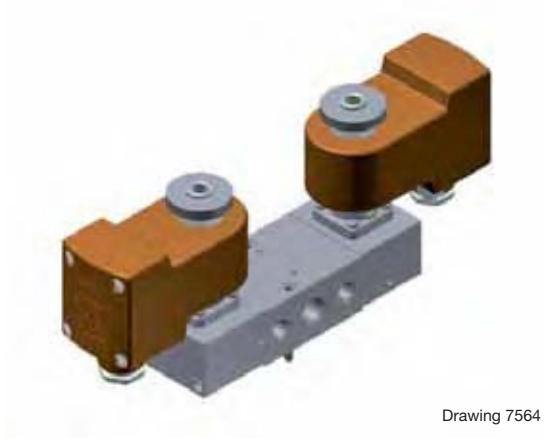

Drawing 7564

3/2-5/2

316L STAINLESS STEEL 3 & 5 WAY VALVES FOR ACTUATOR CONTROL (PIPE MOUNTING AND NAMUR)

PILOT OPERATED

316L STAINLESS ST. NAMUR

NORMALLY CLOSED

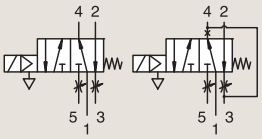

Port size	Orifice Ø 1 mm	Flow factor Qn l/min	Operating Pressure Differential Min bar	Max (MOPD) AC bar	Max (MOPD) DC bar	Fluid Temp. Min °C	Fluid Temp. Max °C	Seat Seal	Parker LUCIFER® Valves Valve Ref.	Housing Ref.	Coil Ref.	ATEX Zone	Protection Mode	Power AC W	Power DC W	Coil Group	Dwg. No.
3/8"-1/4" NPT	8	1400	2	10	10	-25	80	NBR	**U341N3250** [1]	**2995**	**481865**	-	-	8	9	2.1	7554
	8	1400	2	10	10	-25	80	NBR	**U341N3250** [1]	**-**	**492190**	1-21	Ex eb mb IIC T3/T4	11	9	2.1	7554
	8	1400	2	-	10	-25	55	NBR	**U341N3292** [1]	**2995**	**483580.01**	0-20	Ex ia IIC T6	-	0.5 to 3	7.0	7556
	8	1400	2	10	10	-25	75	NBR	**U341N3295** [1]	**-**	**492310**	1-21	Ex eb mb II T3 to T6	6	6	9.0/10.1	7696
	8	1400	2	10	10	-25	75	NBR	**U341N3295** [1]	**-**	**496800**	1-21	Ex db mb IIC T4	8	8	9.0/10.1	7696

Notes:

1. Pilot seat in FKM

For this page	Port size	Orifice (mm)	Qn (l/min)	MOPD (bar)	Fluid Temp (°C)	Amb Temp (°C)
From	3/8"-1/4"	8	1400	10	-25	-25
To	3/8"-1/4"	8	1400	10	80	50

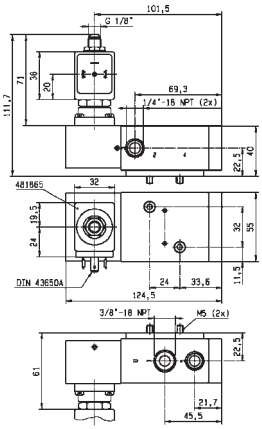

Drawing 7554

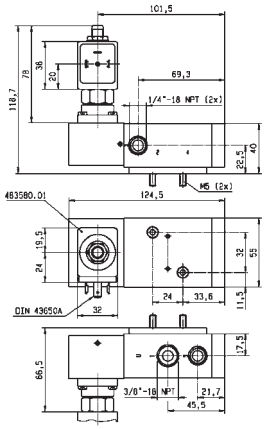

Drawing 7556

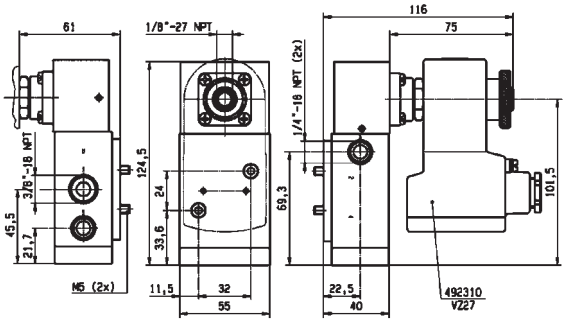

Drawing 7696

3/2-5/2

316L STAINLESS STEEL 3 & 5 WAY VALVES FOR ACTUATOR CONTROL (PIPE MOUNTING AND NAMUR)

PILOT OPERATED

316L STAINLESS ST. NAMUR

SOLENOID OPERATED - SPRING RETURN

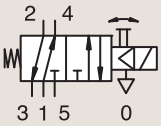

Port size	Orifice Ø 1 mm	Flow factor Qn l/min	Operating Pressure Differential Min bar	Max (MOPD) AC bar	Max (MOPD) DC bar	Fluid Temp. Min °C	Fluid Temp. Max °C	Seat Seal	Parker LUCIFER® Valves Valve Ref.	Housing Ref.	Coil Ref.	ATEX Zone	Protection Mode	Power AC W	Power DC W	Coil Group	Dwg. No.
3/8"-1/4"NPT	8	1400	2	10	10	-25	80	NBR	U341N0250 [123]	-	482606	1-21	Ex mb IIC T4/T5	2	2.5	1.1	7577
	8	1400	2	10	10	-25	80	NBR	U341N0250 [123]	8993	488980	-	-	2	2.5	1.1	7577

Notes:

1. Pilot seat in FKM
2. With captured exhaust
3. With manual override

For this page	Port size	Orifice (mm)	Qn (l/min)	MOPD (bar)	Fluid Temp (°C)	Amb Temp (°C)
From	3/8"-1/4"	8	1400	10	-25	-25
To	3/8"-1/4"	8	1400	10	80	50

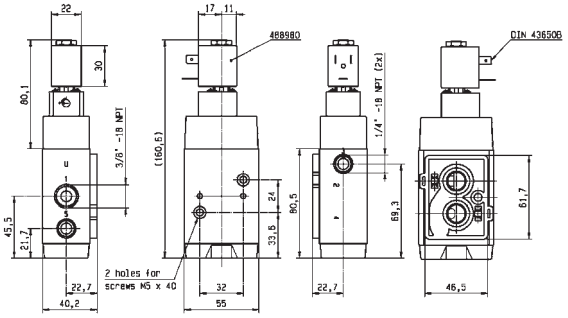

Drawing 7577

5/2

316L STAINLESS STEEL 3 & 5 WAY VALVES FOR ACTUATOR CONTROL (PIPE MOUNTING AND NAMUR)

PILOT OPERATED

316L STAINLESS ST. NAMUR

DUAL SOLENOIDS

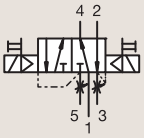

Port size	Orifice Ø 1 mm	Flow factor Qn l/min	Operating Pressure Differential Min bar	Max (MOPD) AC bar	Max (MOPD) DC bar	Fluid Temp. Min °C	Fluid Temp. Max °C	Seat Seal	Parker LUCIFER® Valves Valve Ref.	Housing Ref.	Coil Ref.	ATEX Zone	Protection Mode	Power AC W	Power DC W	Coil Group	Dwg. No.
3/8"-1/4"NPT	8	1400	2	10	10	-25	80	NBR	U347N3250 [1]	4270	481000	-	-	8	8	2.1	7557
	8	1400	2	10	10	-25	80	NBR	U347N3250 [1]	2995	481865	-	-	8	9	2.1	7557

Notes:

1. Pilot seat in FKM

For this page	Port size	Orifice (mm)	Qn (l/min)	MOPD (bar)	Fluid Temp (°C)	Amb Temp (°C)
From	3/8''-1/4''	8	1400	10	-25	-25
To	3/8''-1/4''	8	1400	10	80	50

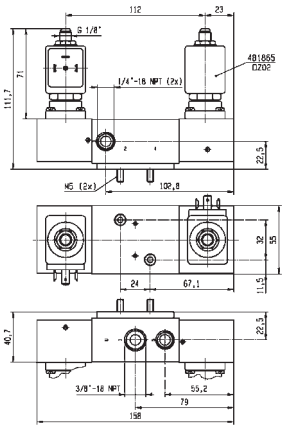

Drawing 7557

3/2

316L STAINLESS STEEL 3 & 5 WAY VALVES FOR ACTUATOR CONTROL (PIPE MOUNTING AND NAMUR)

MANUAL RESET

316L STAINLESS ST. PIPE MOUNTING

UNIVERSAL

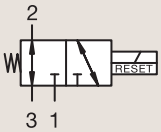

Port size	Orifice Ø 1 mm	Flow factor Qn l/min	Operating Pressure Differential Min bar	Max (MOPD) AC bar	Max (MOPD) DC bar	Fluid Temp. Min °C	Fluid Temp. Max °C	Seat Seal	Parker LUCIFER® Valves: Valve Ref.	Housing Ref.	Coil Ref.	ATEX Zone	Protection Mode	Power AC W	Power DC W	Coil Group	Dwg. No.
1/4" NPTF	6	680	0	10	10	-25	65	NBR	**U033X5152**[12]	-	**492310**	1-21	Ex eb mb II T3 to T6	6	6	10.1/10.2	7029
	6	680	0	-	10	-25	65	NBR	**U033X5156**[2]	-	**482870.01**	0-20	Ex ia IIC T6	-	0.3 to 3	10.1/10.2/12.0	7771
	6	680	0	10	10	-25	65	NBR	**U033X5156**[2]	-	**492310**	1-21	Ex eb mb II T3 to T6	6	6	10.1/10.2/12.0	7771
	6	680	0	-	10	-25	65	NBR	**U033X5156**[2]	-	**492335**	0-20	NEMA 4-4X	-	0.3 to 3	10.1/10.2/12.0	7771
	6	680	0	10	10	-25	65	NBR	**U033X5156**[2]	-	**496700**	1-21	Ex db mb IIC T4 to T6	6	6	10.1/10.2/12.0	7771
	6	680	0	10	10	-25	75	NBR	**U033X51561D**[2]	-	**483270.02**	1-21	Ex db IIC T4 to T6	8	8	11.0	7030

Notes:

1. DC voltage only (or coil with rectifier). Minimum drop off voltage is 15% of nominal voltage (former DIN 19251)
2. Valve delivered with an individual material traceability certificate (3.1 following EN10204)

For this page	Port size	Orifice (mm)	Qn (l/min)	MOPD (bar)	Fluid Temp (°C)	Amb Temp (°C)
From	1/4"	6	680	10	-25	-25
To	1/4"	6	680	10	75	65

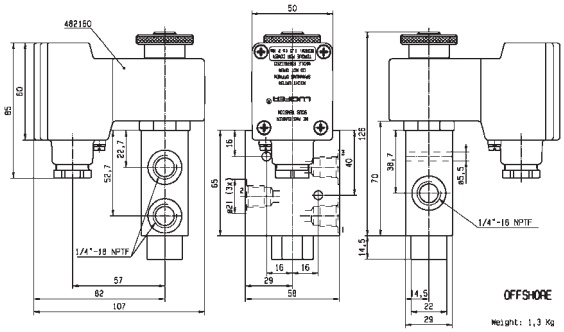

Drawing 7029

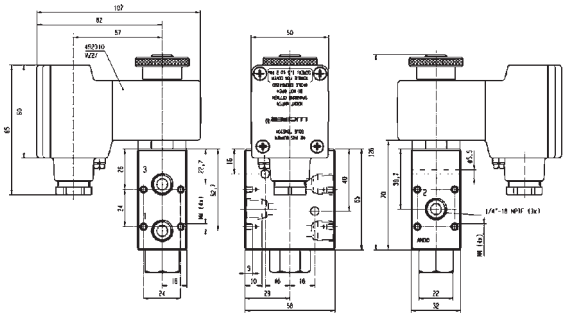

Drawing 7771

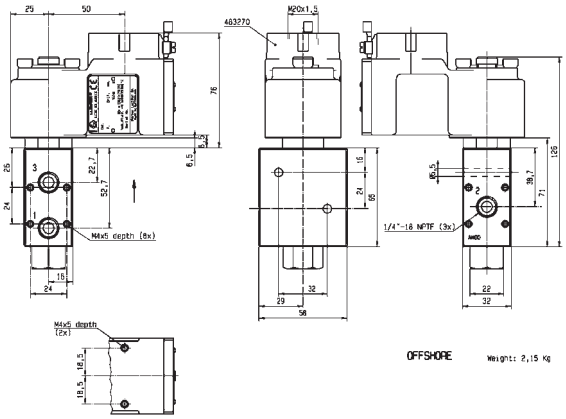

Drawing 7030

3/2

316L STAINLESS STEEL 3 & 5 WAY VALVES FOR ACTUATOR CONTROL (PIPE MOUNTING AND NAMUR)

MANUAL RESET

316L STAINLESS ST.
PIPE MOUNTING

UNIVERSAL

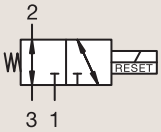

Port size	Orifice Ø 1 mm	Flow factor Qn l/min	Operating Pressure Differential Min bar	Max (MOPD) AC bar	Max (MOPD) DC bar	Fluid Temp. Min °C	Fluid Temp. Max °C	Seat Seal	Parker LUCIFER® Valves Valve Ref.	Housing Ref.	Coil Ref.	ATEX Zone	Protection Mode	Power AC W	Power DC W	Coil Group	Dwg. No.
1/4" NPTF	6	560	0	10	10	-25	65	NBR	**U033X5195**[2]	-	**492310**	1-21	Ex eb mb II T3 to T6	6	6	10.1/10.2/12.0	3594
	6	560	0	10	10	-25	65	NBR	**U033X5195**[2]	-	**496700**	1-21	Ex db mb IIC T4 to T6	6	6	10.1/10.2/12.0	3594
	6	680	0	10	10	-25	65	NBR	**U033X7156**[1]	-	**492310**	1-21	Ex eb mb II T3 to T6	6	6	10.1/10.2	8168
	6	680	0	10	10	-25	65	NBR	**U033X7156**	-	**496560**	1-21	Ex db mb IIC T4	8	8	10.1/10.2	8168
	6	680	0	10	10	-25	65	NBR	**U033X7156**	-	**496700**	1-21	Ex db mb IIC T4 to T6	6	6	10.1/10.2	8168
	6	680	0	10	10	-25	65	NBR	**U033X7156**	-	**496895**	-	-	8	8	10.1/10.2	8168

Notes:

1. DC voltage only (or coil with rectifier). Minimum drop off voltage is 15% of nominal voltage (former DIN 19251)
2. Valve delivered with an individual material traceability certificate (3.1 following EN10204)

For this page	Port size	Orifice (mm)	Qn (l/min)	MOPD (bar)	Fluid Temp (°C)	Amb Temp (°C)
From	1/4"	6	560	10	-25	-25
To	1/4"	6	680	10	65	65

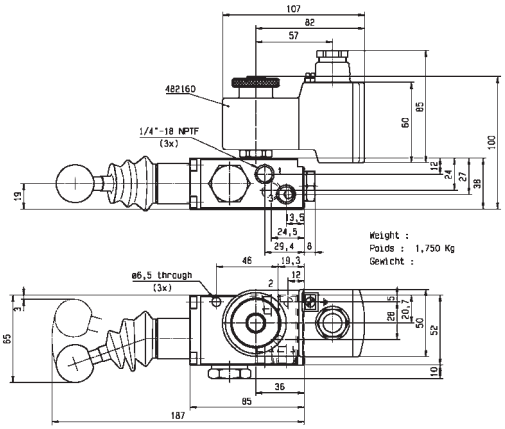

Drawing 3594

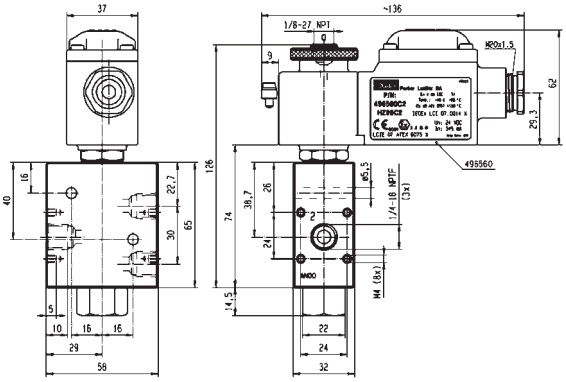

Drawing 8168

3/2

316L STAINLESS STEEL 3 & 5 WAY VALVES FOR ACTUATOR CONTROL (PIPE MOUNTING AND NAMUR)

MANUAL RESET

316L STAINLESS ST. PIPE MOUNTING

UNIVERSAL

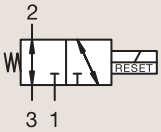

Port size	Orifice Ø 1 mm	Flow factor Qn l/min	Operating Pressure Differential Min bar	Max (MOPD) AC bar	Max (MOPD) DC bar	Fluid Temp. Min °C	Fluid Temp. Max °C	Seat Seal	Parker LUCIFER® Valves Valve Ref.	Housing Ref.	Coil Ref.	ATEX Zone	Protection Mode	Power AC W	Power DC W	Coil Group	Dwg. No.
3/8" NPTF	6	680	0	-	10	-25	65	NBR	**U033X5256**$_1$	**-**	**482870.01**	0-20	Ex ia IIC T6	-	0.3 to 3	10.1/10.2/12.0	7671
	6	680	0	10	10	-25	65	NBR	**U033X5256**$_1$	**-**	**492310**	1-21	Ex eb mb II T3 to T6	6	6	10.1/10.2/12.0	7671
	6	680	0	10	10	-25	65	NBR	**U033X5256**$_1$	**-**	**496700**	1-21	Ex db mb IIC T4 to T6	6	6	10.1/10.2/12.0	7671
	6	680	0	10	10	-25	65	NBR	**U033X52561D**$_1$	**-**	**483270**	1-21	Ex db IIC T4 to T6	8	8	11.0	7672
	6	680	0	10	10	-25	65	NBR	**U033X52561D**$_1$	**-**	**483270.02**	1-21	Ex db IIC T4 to T6	8	8	11.0	7672

Notes:

1. Valve delivered with an individual material traceability certificate (3.1 following EN10204)

For this page	Port size	Orifice (mm)	Qn (l/min)	MOPD (bar)	Fluid Temp (°C)	Amb Temp (°C)
From	3/8''	6	680	10	-25	-25
To	3/8''	6	680	10	65	65

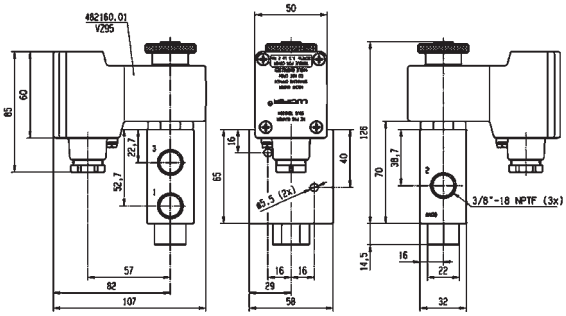

Drawing 7671

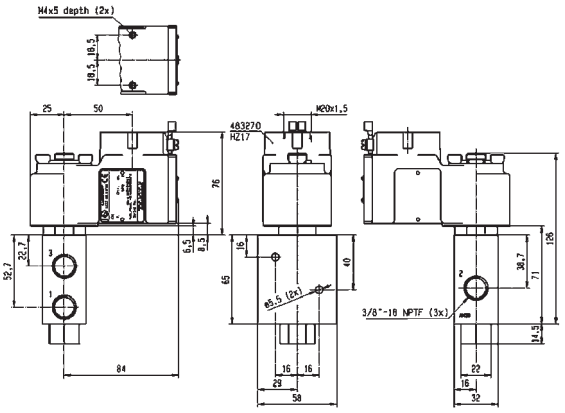

Drawing 7672

ELECTROPNEUMATIC PRESSURE REGULATORS

aerospace
climate control
electromechanical
filtration
fluid & gas handling
hydraulics
pneumatics
process control
sealing & shielding

Basic	1/4" 1/2"
Comfort	1/4" 1/2"
Comfort	1/2" HP 1" 2"
Comfort ATEX	1/2" 1" 2"

Parker Hannifin Corporation
Fluid Control Division Europe
General Catalogue FCDE/0110/UK/V2.0

ELECTROPNEUMATIC PRESSURE REGULATORS

Lucifer® EPP4 Programmable Pressure Regulator

EPP4 is an electro pneumatic pressure regulator with integrated electronic system.
A pulsed width modulated solenoid valve controls the output pressure proportionally to an analog input signal.
Very high accuracy is guaranteed thanks to a high precision closed loop signal provided by a built in pressure sensor.

Market

Robotics
Paper industry
Machine tools
Mobile
Buildings
Textile
Instrumentation
Semi conductor

Description of Applications

Welding
Speed and brake control
Sanding
Cutting
Humidification
Tension regulation
Painting
Presses
Polishing
Adaptative suspension control

Value Propositions for the Lucifer® EPP4 Range of Proportional Pressure Regulators

- All parameters fully adjustable through the PC software Calys
- Easy to use software
- Long life expectancy
- Compact and light
- Limited inventory
- Low power
- Flexible remote display positioning
- Proven expertise of Parker, a pioneer in pressure regulation technology

calys Software for EPP Comfort

Calys is a unique software in house developed to configurate all the parameters of the EPP4 Comfort range.
Calys is an option of the EPP4. To use CALYS, you need to order cable reference 496449 wich permits the communication between the EPP4 and a PC.

Calys offers many capabilities:

- It enables distributors to reduce inventory by keeping a generic EPP4 in stock and adjust it to the needs of each customer application. They can switch for example from 0-10 V to 4-20 mA, or from 0-7 bar pressure range to 0-5 bar.
- Engineers designing a pneumatic system are able to monitor precisely all the important values (electrical or pneumatical) directly on their laptop.
- After sales technicians are able to receive via email all the parameters measured by the EPP4 installed on a machine wherever its location allowing remote ma intenance operation.
- PID regulation parameters can be adjusted with Calys to match required regulator response (like slow or reactive).

To download free Calys software click on **www.parker.com/FCDE/Support**

ELECTROPNEUMATIC PRESSURE REGULATORS

TABLE OF CONTENT

Introduction EPP ..... page 412

EPP4 Basic Range ..... page 414

EPP4 Comfort Range ..... page 418

EPP4 Comfort HP Range ..... page 422

EPP4 Comfort Range ATEX ..... page 428

Accessories ..... page 434

INTRODUCTION

Description Operation

The EPP4 Series is a family of electrically remote-controlled pneumatic pressure regulators with closed loop integrated electronic control.

It allows regulating the outlet pressure proportionally to an electrical control signal.
The EPP4 regulator comprises a traditional servo-operated pneumatic pressure regulator, where the pilot chamber is fed y one or the other of two pulse width modulated 2-way solenoid valves.

The pressure sensor measures the outlet pressure of the regulator and provides a feedback signal to the controller.
Any difference between the control signal and the feedback signal is converted to a digital signal to energise the coil of one or the other 2-way valves to correct the position of the regulator.

The control signal can be a voltage (0-10 V) or a current (4-20 mA). The inlet of the **"Filling Valve"** is connected directly to the main inlet P of the regulator; when energised this valve will fill the servo-chamber for increasing the pressure at the outlet A of the regulator.

When the other **"exhaust valve"** is energised (reduction of pressure at the outlet A of the regulator), the pressure of the servo-chamber will be exhausted through a discharge orifice located between the cover and the body and directly fed to the atmosphere without silencer.

The exhaust of the main regulated pressure will be made through the quick exhaust R.
The use of a conventional silencer is recommended.
Both solenoid valves assure the Filling or Emptying of the servo-chamber in order to increase or decrease the pressure at the outlet of the regulator.

In rest position of the valves all ports are blocked.

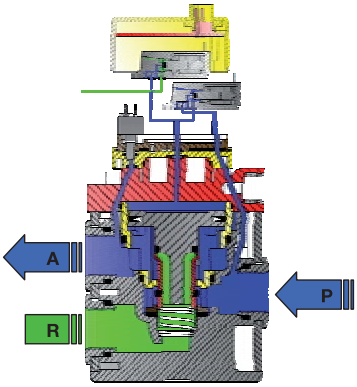

Filling positon

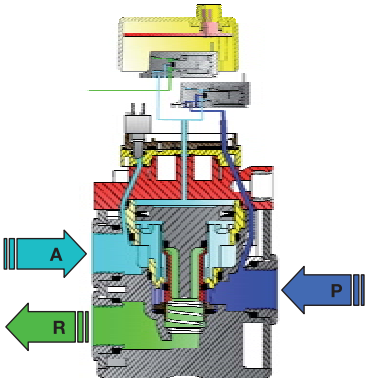

Stand by position

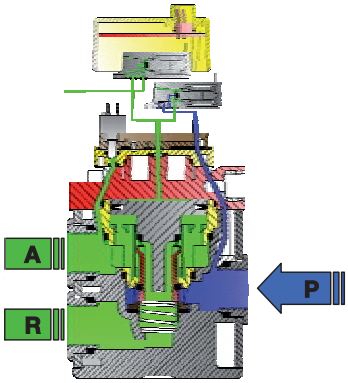

Emptying position

Block Diagram

The controller receives both the control signal (set pressure) and the feedback signal from the sensor (outlet pressure).

Any difference between the two amplifier inputs results in a corresponding output which drives the appropriate 2-way pulse width modulated solenoid valve so that the pilot piston moves to correct the pressure.

The same feedback signal from the sensor is used for the output feedback in voltage and current.

The digital signal (alarm) is activated when the conditions (out of pressure or time tolerance) are met.

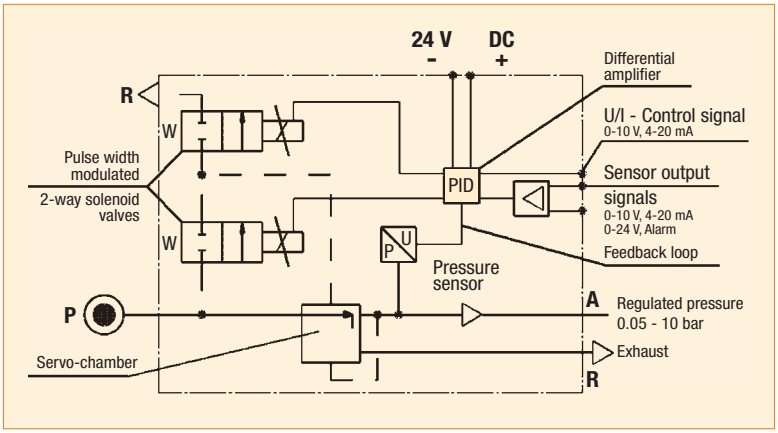

EPP4 possible executions : Basic and Comfort

EPP4 Basic and Comfort ranges share the same reliable mechanical parts. Proportional regulation is also identical for the two different executions, giving the same characteristics for hysteresis or precision for instance.

Comfort range regulators have a second M12 connector, that can be used to connect a remote display showing the current regulated pressure, or a PC to easily set the regulation's parameters. These are the key feature options for a comfortable use.

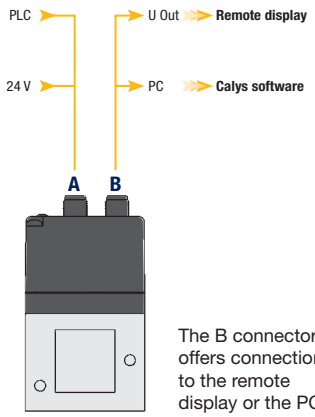

The B connector offers connection to the remote display or the PC.

LUCIFER® EPP4 BASIC 1/4" & 1/2"

Basic	1/4" 1/2"
Comfort	1/4" 1/2"
Comfort	1/2" HP 1" 2"
Comfort ATEX	1/2" 1" 2"

TECHNICAL DATA

	Basic 1/4"	Basic 1/2"
Fluids:	Lubricated or non lubricated air and neutral gases Recommended fi ltration: 50 µm	
Temperature range:	**Ambient:** 0°C to +50°C **Fluid:** 0°C to +50°C	
Inlet pressure range: The inlet pressure must always be at least 1 bar above the regulated pressure.	1 to 12 bar	1 to 12 bar
Outlet pressure range:	0.05 to 10 bar	
Hysteresis:	± 50 mbar (factory set up)	
Air consumption at constant control signal:	0	
Supply voltage:	24 V DC ± 15% (Max. ripple 1 V)	
Power consumption:	Max. 2.8 W with 24 V DC and constant changes of the control signal < 1.5 W without change of control signal	
Control signal:	Analog 0 - 10 V Analog 4 - 20 mA	
Max. flow: **Indicative response time:** With a volume of 330 cm³ at the outlet of the regulator	70 m³/h	150 m³/h
Filling 2 to 4 bar: **Filling 2 to 8 bar:** **Emptying 4 to 2 bar:** **Emptying 8 to 2 bar:**	50 msec 100 msec 70 msec 130 msec	60 msec 120 msec 90 msec 190 msec
Safety position:	In case of control signal failure or if it is less than 50mV, the regulated pressure drops automatically to 0 bar (atmospheric pressure). In case of voltage supply failure, the regulated pressure will be kept constant.	
Electrical connection:	M12 - 4 pin; 4 x 0.34 mm²	
Life expectancy:	> 50 Million changes of control signal steps	
Mounting position:	Indifferent (recommended position: upright; electronic part on top)	
Resistance to vibrations:	30 g in all directions	
Degree of protection:	IP 65	
Assembly:	Silicone free	
Electromagnetic compatibility: **In accordance with:**	EN 61000-6-1: 2001 EN 61000-6-2: 2001 EN 61000-6-3: 2001 EN 61000-6-4: 2001	
Installation and setting instructions:	See our "Notice 408038, 408014" and appendix supplied with the product.	

Note: Parker reserves the right to change specifications without notification.

LUCIFER® EPP4 BASIC 1/4" & 1/2"

FLOW CURVES

Flow Curve Basic 1/4"

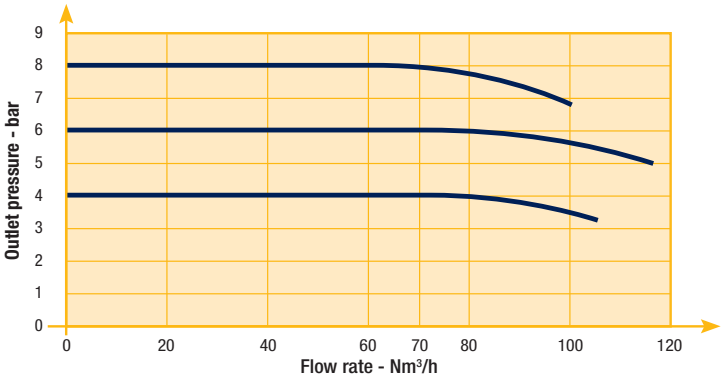

Flow Curve Basic 1/2"

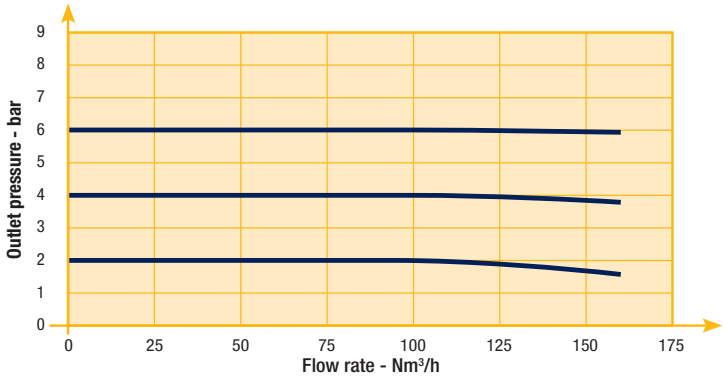

LUCIFER® EPP4 BASIC 1/4" & 1/2"

REFERENCES

Codes	Pipe	Pressure Range (bar)		Control Signal (see options)	Drawing Number
P4BG2001A001	G 1/4''	0	4 bar	4 - 20 mA	1
P4BG2001A002	G 1/4"	0	10 bar	0 - 10 V	1
P4BG2001A003	G 1/4"	0	10 bar	4 - 20 mA	1
P4BG2001A004	G 1/4"	0	6 bar	0 - 10 V	1
P4BG2001A005	G 1/4"	0	6 bar	4 - 20 mA	1
P4BG2001A006	G 1/4"	0	5 bar	0 - 10 V	1
P4BG2001A007	G 1/4"	0	5 bar	4 - 20 mA	1
P4BG2001A008	G 1/4"	0	7 bar	0 - 10 V	1
P4BG2001A009	G 1/4"	0	7 bar	4 - 20 mA	1
P4BG2003A002 *	G 1/4''	0	10 bar	0 - 10 V	1
P4BG2003A003 *	G 1/4''	0	10 bar	4 - 20 mA	1
P4BG4001A002	G 1/2"	0	10 bar	0 - 10 V	2
P4BG4001A003	G 1/2"	0	10 bar	4 - 20 mA	2
P4BG4001A004	G 1/2"	0	6 bar	0 - 10 V	2
P4BG4001A005	G 1/2"	0	6 bar	4 - 20 mA	2
P4BG4001A006	G 1/2''	0	5 bar	0 - 10 V	2
P4BG4001A007	G 1/2''	0	5 bar	4 - 20 mA	2
P4BG4001A008	G 1/2"	0	7 bar	0 - 10 V	2
P4BG4001A009	G 1/2"	0	7 bar	4 - 20 mA	2
P4BG4004A010 ***	G 1/2''	0	4 bar	0 - 10 V	2
P4BG4051A002 **	G 1/2''	0	10 bar	4 - 20 mA	2
P4BN2001A002	NPT 1/4''	0	10 bar	0 - 10 V	2
P4BN2001A003	NPT 1/4''	0	10 bar	4 - 20 mA	2
P4BN4001A002	NPT 1/2''	0	10 bar	0 - 10 V	2
P4BN4001A003	NPT 1/2''	0	10 bar	4 - 20 mA	2

* Integrated pilot exhaust
** O2
*** External pressure supply

LUCIFER® EPP4 BASIC 1/4" & 1/2"

DIMENSIONS DRAWINGS EPP4 BASIC 1/4"

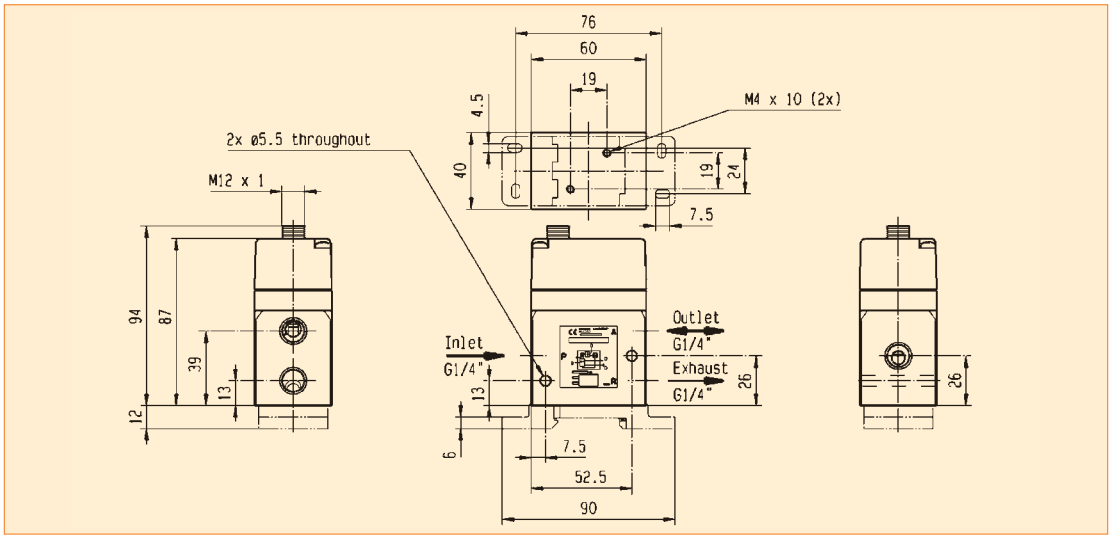

Drawing 1

DIMENSIONS DRAWINGS EPP4 BASIC 1/2"

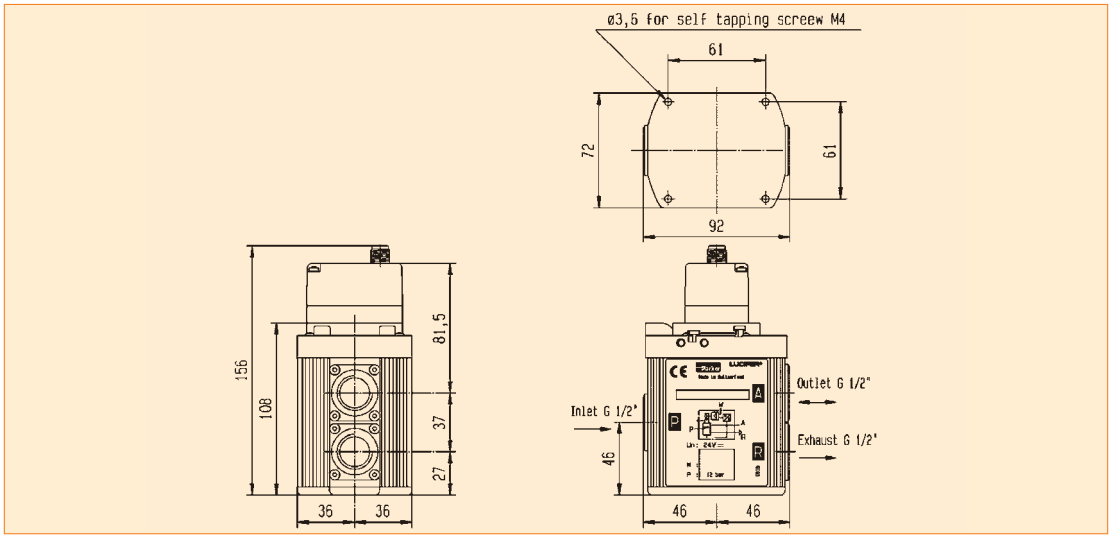

Drawing 2

LUCIFER® EPP4 COMFORT 1/4" & 1/2"

Basic	1/4" 1/2"
Comfort	1/4" 1/2"
Comfort	1/2" HP 1" 2"
Comfort ATEX	1/2" 1" 2"

TECHNICAL DATA

	Comfort 1/4"	Comfort 1/2"
Fluids:	Lubricated or non lubricated air and neutral gases - Recommended fi ltration: 50 µm	
Temperature range:	**Ambient:** 0°C to +50 °C **Fluid:** 0°C to +50 °C	
Inlet pressure range: The inlet pressure must always be at least 1 bar above the regulated pressure.	1 to 12 bar	1 to 12 bar
Outlet pressure range:	0.05 bis 10 bar	
Hysteresis:	± 50 mbar (factory set up)	
Air consumption at constant control signal:	0	
Supply voltage:	24 V DC ± 15 % (Max. ripple 1 V)	
Power consumption:	Max. 2.8 W with 24 V DC and constant changes of the control signal < 1.5 W without change of control signal	
Control signal:	Analog 0 - 10 V Analog 4 - 20 mA	
Outlet sensor signal:	Analog 0 - 10 V Standard for 0 - 10 bar; Adjustable Analog 4 - 20 mA Standard for 0 - 10 bar; Adjustable	Digital 0/24 V for alarm features: Adjustable pressure error (+/-) Adjustable delay ON Adjustable delay OFF Adjustable logic (+/-)
Max. flow:	70 m³/h	150 m³/h
Indicative response time:	With a volume of 330 cm³ at the outlet of the regulator	
Filling 2 to 4 bar : Filling 2 to 8 bar: Emptying 4 to 2 bar: Emptying 8 to 2 bar:	50 msec 100 msec 70 msec 130 msec	60 msec 120 msec 90 msec 190 msec
Safety position:	In case of control signal failure or if it is less than 50 mV, the regulated pressure drops automatically to 0 bar (atmospheric pressure). In case of voltage supply failure, the regulated pressure will be kept constant.	
Electrical connection:	M12 - 8 pin; male connector power supply/control signal M12 - 5 pin; male connector communication	
Life expectancy:	> 50 Million changes of control signal steps	
Mounting position:	Indifferent (recommended position: upright; electronic part on top)	
Resistance to vibrations:	30 g in all directions	
Degree of protection:	IP 65	
Assembly:	Silicone free	
Electromagnetic compatibility: **In accordance with:**	EN 61000-6-1: 2001 EN 61000-6-2: 2001 EN 61000-6-3: 2001 + A11 2004 edition (01/07/07) EN 61000-6-4: 2001	
Installation and setting instructions:	See our "Notice 408128, 408134" and appendix supplied with the product.	

Note: Parker reserves the right to change specifications without notification.

LUCIFER® EPP4 COMFORT 1/4" & 1/2"

Flow Curves

Flow Curve 1/4"

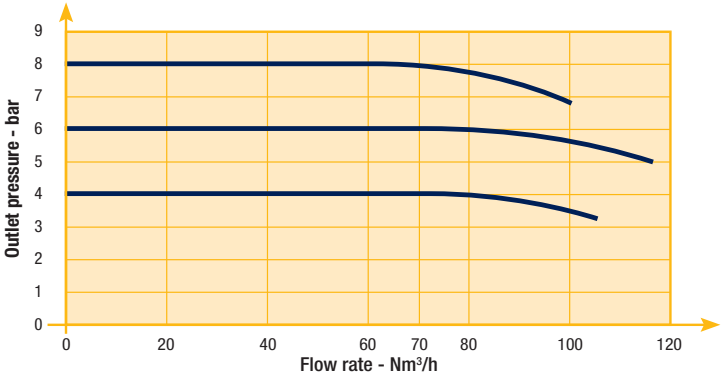

Flow Curve 1/2"

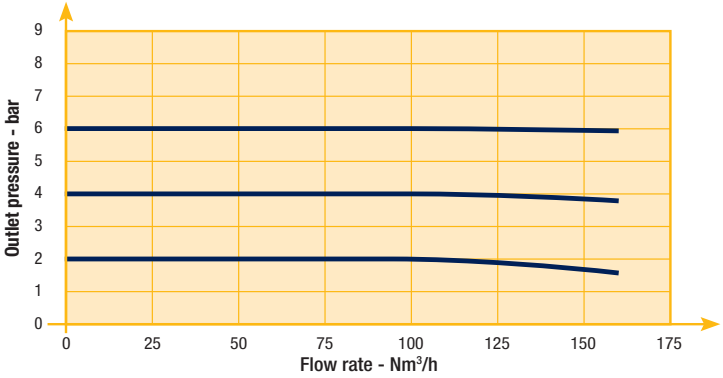

LUCIFER® EPP4 COMFORT1/4" & 1/2"

REFERENCES

Codes	Pipe	Pressure Range (bar)		Control Signal (see options)	Display	Drawing Number
P4CG2001C001	G 1/4	0	10	0-10 V	-	3
P4CG2001C002	G 1/4	0	10	4-20 mA	-	3
P4CG2001C005	G 1/4	0	7	0-10 V	-	3
P4CG2001C006	G 1/4	0	7	4-20 mA	-	3
P4CG2002C001	G 1/4	0	10	0-10 V	included	3
P4CG2002C002	G 1/4	0	10	4-20 mA	included	3
P4CG2003C001 *	G 1/4	0	10	0-10 V	-	3
P4CG2003C002 *	G 1/4	0	10	4-20 mA	-	3
P4CG2002C007	G 1/4	0	7	0-10 V	-	3
P4CG2002C008	G 1/4	0	7	4-20 mA	-	3
P4CN2001C001	1/4 NPT	0	10	0-10 V	-	3
P4CN2001C002	1/4 NPT	0	10	4-20 mA	-	3
P4CN2002C001	1/4 NPT	0	10	0-10 V	included	3
P4CN2002C002	1/4 NPT	0	10	4-20 mA	included	3
P4CG4001C001	G 1/2	0	10	0-10 V	-	4
P4CG4001C002	G 1/2	0	10	4-20 mA	-	4
P4CG4001C005	G 1/2	0	7	0-10 V	-	4
P4CG4001C006	G 1/2	0	7	4-20 mA	-	4
P4CG4002C001	G 1/2	0	10	0-10 V	included	4
P4CG4002C002	G 1/2	0	10	4-20 mA	included	4
P4CG4002C005	G 1/2	0	7	0-10 V	-	4
P4CG4002C006	G 1/2	0	7	4-20 mA	-	4
P4CG4051C001 **	G 1/2	0	10	0-10 V	-	4
P4CG4051C002 **	G 1/2	0	10	4-20 mA	-	4
P4CN4001C001	1/2 NPT	0	10	0-10 V	-	4
P4CN4001C002	1/2 NPT	0	10	4-20 mA	-	4
P4CN4002C001	1/2 NPT	0	10	0-10 V	included	4
P4CN4002C002	1/2 NPT	0	10	4-20 mA	included	4

* Integrated pilot exhaust
** O2

LUCIFER® EPP4 COMFORT 1/4" & 1/2"

DIMENSIONS DRAWINGS EPP4 COMFORT RANGE 1/4"

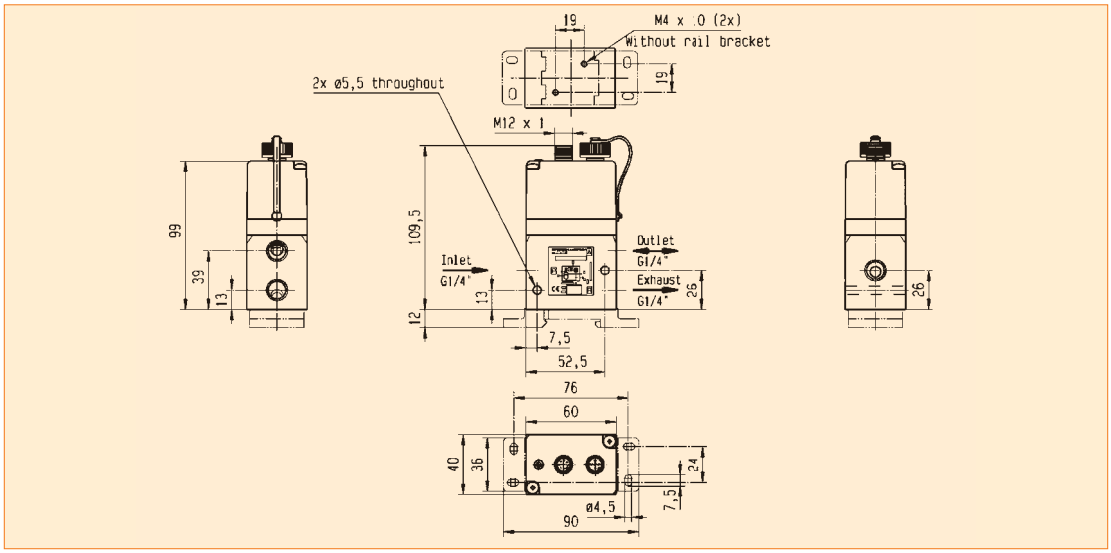

Drawing 3

DIMENSIONS DRAWINGS EPP4 COMFORT RANGE 1/2"

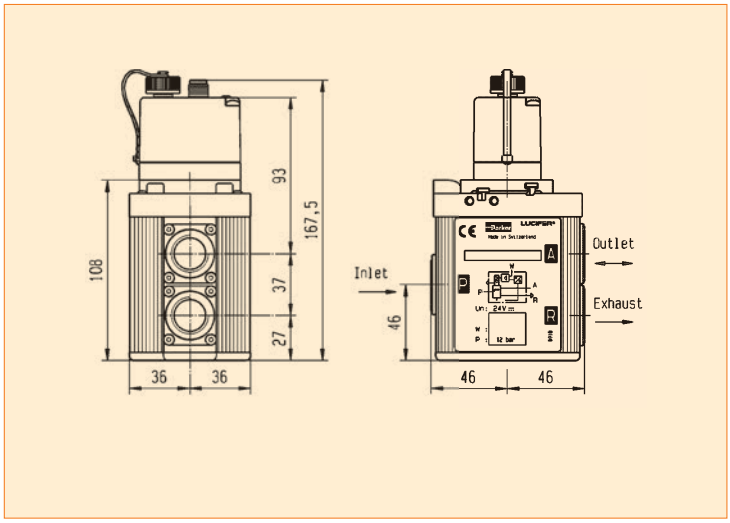

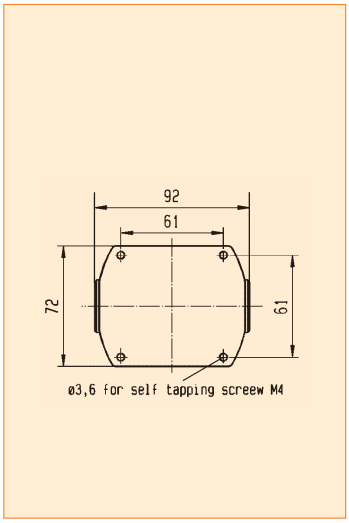

Drawing 4

LUCIFER® EPP4 COMFORT 1/2"HP, 1" & 2"

Basic	1/4" 1/2"
Comfort	1/4" 1/2"
Comfort	**1/2" HP 1" 2"**
Comfort ATEX	1/2" 1" 2"

TECHNICAL DATA

	Comfort 1/2" HP	Comfort 1"	Comfort 2"
Fluids:	Lubricated or non lubricated air and neutral gases - Recommended fi ltration: 50 µm		
Temperature range:	**Ambient:** 0°C to +50°C **Fluid:** 0°C to +50°C		
Inlet pressure range: The inlet pressure must always be at least 1 bar above the regulated pressure.	1 to 21 bar	1 to 21 bar	1 to 12 bar
Outlet pressure range:	0.05 to 20 bar	0.05 to 20 bar	0.05 to 10 bar
Hysteresis:	≤ 100 mbar if P inlet ≤ 10 bar ≤ 200 mbar if P inlet > 10 bar		
Air consumption at constant control signal:	**0**		
Supply voltage:	**24V DC** ± 15%		
Power consumption:	Max. 6 W with 24 V DC and constant changes of thecontrol signal < 2 W without change of control signal		
Control signal:	Analog 0 - 10 V Analog 4 - 20 mA		
Outlet sensor signal:	Analog 0 - 10 V Standard for 0 - 10 bar; Adjustable Analog 4 - 20 mA Standard for 0 - 10 bar; Adjustable	Digital 0/24 V for alarm features: Adjustable pressure error (+/-) Adjustable delay ON Adjustable delay OFF Adjustable logic (+/-)	
Max. flow:	150 m³/h	1 000 m³/h	2 700 m³/h
Indicative response time:	With a volume of 330 cm³ at the outlet of the regulator		
Filling 2 to 8 bar:	120 msec	250 msec	250 msec
Emptying 8 to 2 bar:	190 msec	400 msec	400 msec
Safety position:	In case of control signal failure or if it is less than 50 mV, the regulated pressure drops automatically to 0 bar atmospheric pressure (for pressure ranges from 0-10 bar, 100 mV for pressure range over 10 bar). In case of voltage supply failure, the regulated pressure will be kept constant.		
Electrical connection:	M12 - 8 pin; male connector power supply/control signal M12 - 5 pin; male connector communication		
Life expectancy:	> 20 Million changes of control signal steps		
Mounting position:	Indifferent (recommended position: upright; electronic part on top)		
Resistance to vibrations:	30 g in all directions		
Degree of protection:	IP 65		
Assembly:	Silicone free		
Electromagnetic compatibility: **In accordance with:**	EN 61000-6-1: 2001 EN 61000-6-2: 2001 EN 61000-6-3: 2001 + A11 2004 edition (01/07/07) EN 61000-6-4: 2001		
Installation and setting instructions:	See our "408 193" and appendix supplied with the product.		

Note: Parker reserves the right to change specifications without notification.

LUCIFER® EPP4 COMFORT 1/2"HP, 1" & 2"

FLOW CURVES

Flow Curve 1/2"HP

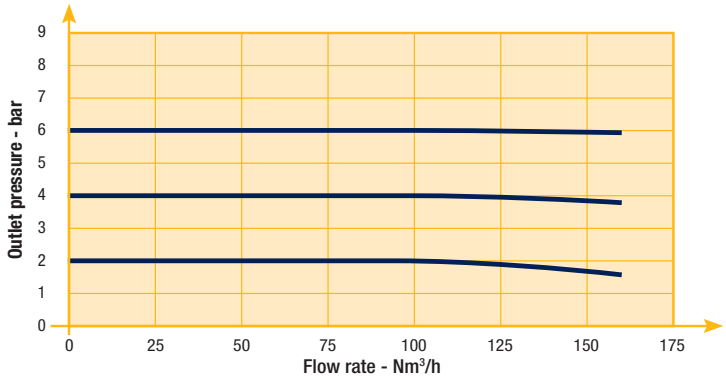

Flow Curve 1"

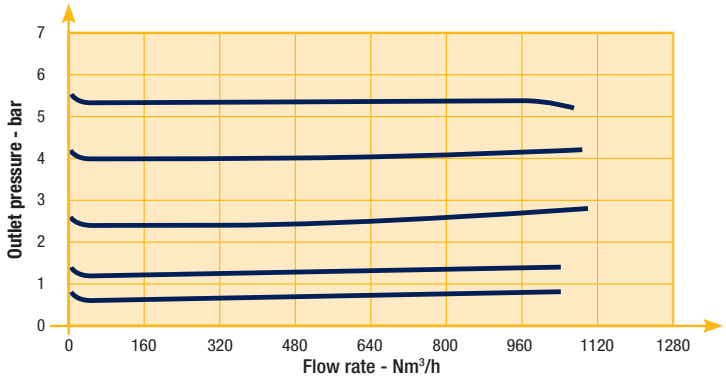

Flow Curve 2"

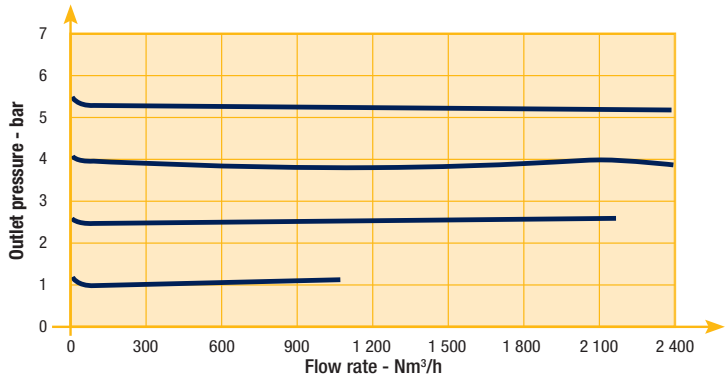

LUCIFER® EPP4 COMFORT 1/2"HP

REFERENCES

Codes	Pipe	Max inlet pressure (bar)	Pressure range (bar)		Control signal (see options)	Dimensional Drawing
P4CG4101D001	G1/2	15	0	12	0-10 V	5
P4CG4201D005	G1/2	21	0	16	0-10 V	6
P4CG4201D003	G1/2	21	0	20	0-10 V	6
P4CG4201D004	G1/2	21	0	20	4-20 mA	6

Other specific settings or specialties are available, please contact us.

LUCIFER® EPP4 COMFORT 1/2"HP

DIMENSIONS DRAWINGS

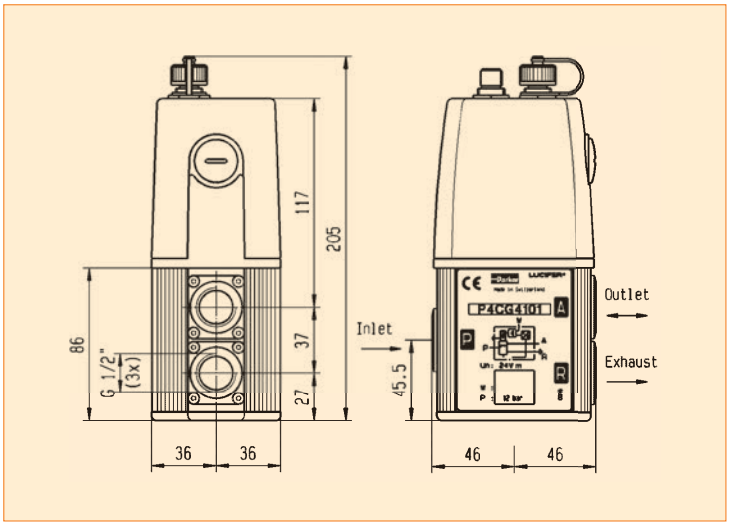

Drawing 5

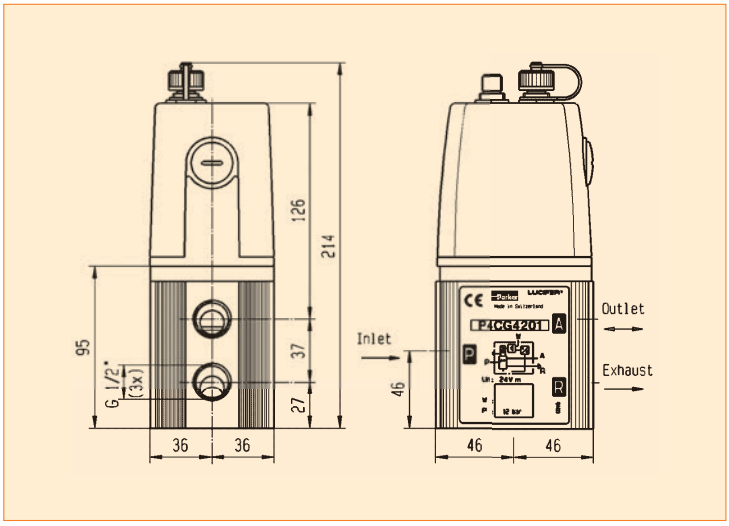

Drawing 6

LUCIFER® EPP4 COMFORT 1" & 2"

REFERENCES

Codes	Pipe	Max inlet pressure (bar)	Pressure range (bar)		Control signal (see options)	Dimensional Drawing
P4CG6101C009	G1	12	0	3.5	4-20 mA	7
P4CG6101C011	G1	12	0	5.0	0-10 V	7
P4CG6101C010	G1	12	0	6.0	4-20 mA	7
P4CG6101C001	G1	12	0	10	0-10 V	7
P4CG6101C002	G1	12	0	10	4-20 mA	7
P4CG6201D001	G1	21	0	12	0-10 V	7
P4CG6201D003	G1	21	0	20	0-10 V	7
P4CG9101C012	G2	12	0	4.0	4-20 mA	8
P4CG9101C010	G2	12	0	6.0	4-20 mA	8
P4CG9101C001	G2	12	0	10	0-10 V	8
P4CG9101C002	G2	12	0	10	4-20 mA	8

Other specific settings or specialties are available, please contact us.

LUCIFER® EPP4 COMFORT 1" & 2"

DIMENSIONS DRAWINGS EPP4 COMFORT RANGE 1"

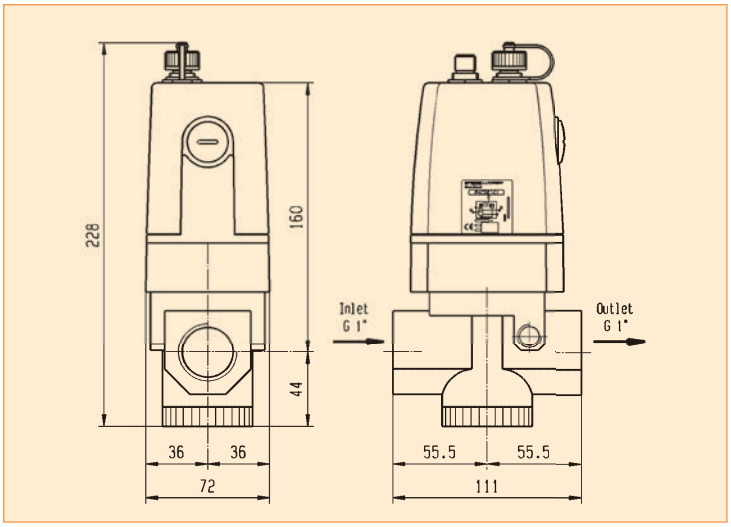

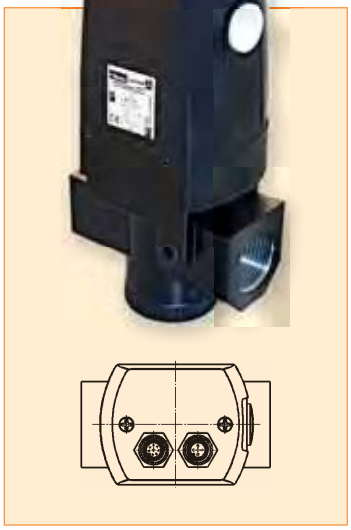

Drawing 7

DIMENSIONS DRAWINGS EPP4 COMFORT RANGE 2"

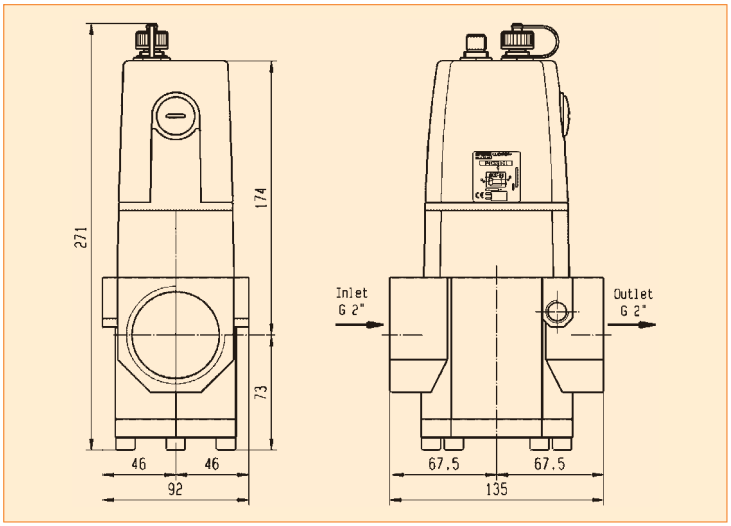

Drawing 8

LUCIFER® EPP4 COMFORT 1/2", 1" & 2" ATEX

Basic	1/4" 1/2"
Comfort	1/4" 1/2"
Comfort	1/2" 1" HP 2"
Comfort ATEX	1/2" 1" 2"

TECHNICAL DATA

	Comfort 1/2" ATEX	Comfort 1" ATEX	Comfort 2" ATEX
Fluids:	Lubricated or non lubricated air and neutral gases - Recommended fi ltration: 50 µm		
Temperature range:	**Ambient:** 0°C to +50°C **Fluid:** 0°C to +50°C		
Inlet pressure range: The inlet pressure must always be at least 1 bar above the regulated pressure.	Inlet pressure range: 1 to 12 bar		
Outlet pressure range:	Outlet pressure range: 0.05 to 10 bar		
Hysteresis:	≤ 100 mbar		
Air consumption at constant control signal:	**0**		
ATEX certification:	Ex II 3 G/D Ex nA IIC T4 Gc Ex tc IIIB T130°C Dc		
Supply voltage:	**24V DC** ± 15 %		
Power consumption:	Max. 6 W with 24 V DC and constant changes of thecontrol signal < 2 W without change of control signal		
Control signal:	Analog 0 - 10 V Analog 4 - 20 mA		
Outlet sensor signal:	Analog 0 - 10 V Standard for 0 - 10 bar; Adjustable Analog 4 - 20 mA Standard for 0 - 10 bar; Adjustable	Digital 0/24 V for alarm features: Adjustable pressure error (+/-) Adjustable delay ON Adjustable delay OFF Adjustable logic (+/-)	
Max. flow:	150 m³/h	1 000 m³/h	2 700 m³/h
Indicative response time:	With a volume of 330 cm³ at the outlet of the regulator		
Filling 2 to 8 bar: Emptying 8 to 2 bar:	120 msec 190 msec	250 msec 400 msce	250 msec 400 msec
Safety position:	In case of control signal failure or if it is less than 50 mV, the regulated pressure drops automatically to 0 bar atmospheric pressure (for pressure ranges from 0-10 bar, 100 mV for pressure range over 10 bar). In case of voltage supply failure, the regulated pressure will be kept constant.		
Electrical connection:	M12 - 8 pin; male connector power supply/control signal M12 - 5 pin; male connector communication		
Life expectancy:	> 20 Million changes of control signal steps		
Mounting position:	Indifferent (recommended position: upright; electronic part on top)		
Resistance to vibrations:	30 g in all directions		
Degree of protection:	IP 54		
Assembly:	Silicone free		
Electromagnetic compatibility: **In accordance with:**	EN 61000-6-1: 2001 EN 61000-6-2: 2001 EN 61000-6-3: 2001 + A11 2004 edition (01/07/07) EN 61000-6-4: 2001		
Installation and setting instructions:	See our "408 283" and appendix supplied with the product.		

Note: Parker reserves the right to change specifications without notification.

LUCIFER® EPP4 COMFORT 1/2", 1" & 2" ATEX

FLOW CURVES

Flow Curve 1/2"

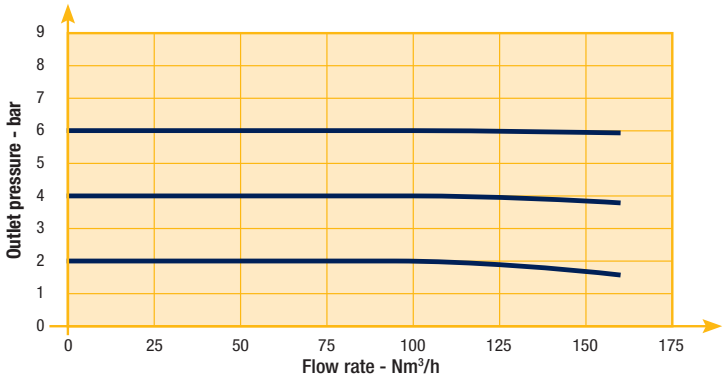

Flow Curve 1"

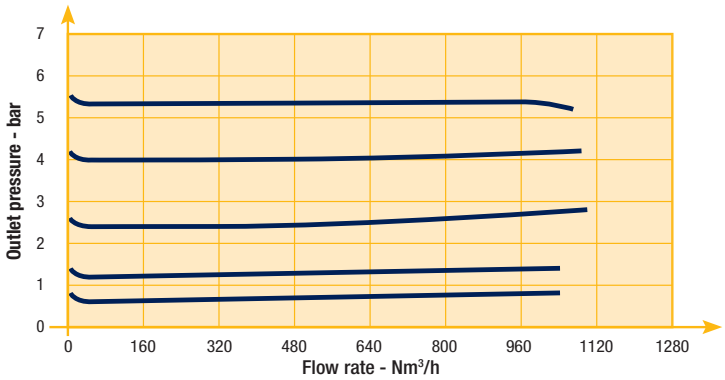

Flow Curve 2"

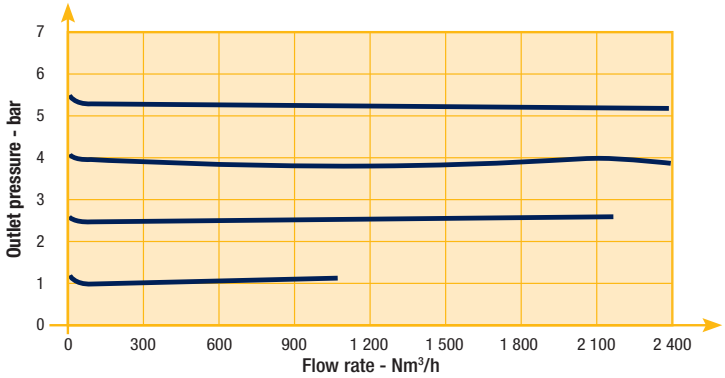

LUCIFER® EPP4 COMFORT 1/2" ATEX

REFERENCES

Codes	Pipe	Max inlet pressure (bar)	Pressure range (bar)		Control signal (see options)	Dimensional Drawing
P4CG4461C001	G1/2	12	0	10	0-10 V	9
P4CG4461C002	G1/2	12	0	10	4-20 mA	9
P4CG4465C001 **	G1/2	12	0	10	0-10 V	9
P4CG4465C002 **	G1/2	12	0	10	4-20 mA	9

** O2

Other specific settings or specialties are available, please contact us.

LUCIFER® EPP4 COMFORT 1/2" ATEX

DIMENSIONS DRAWINGS

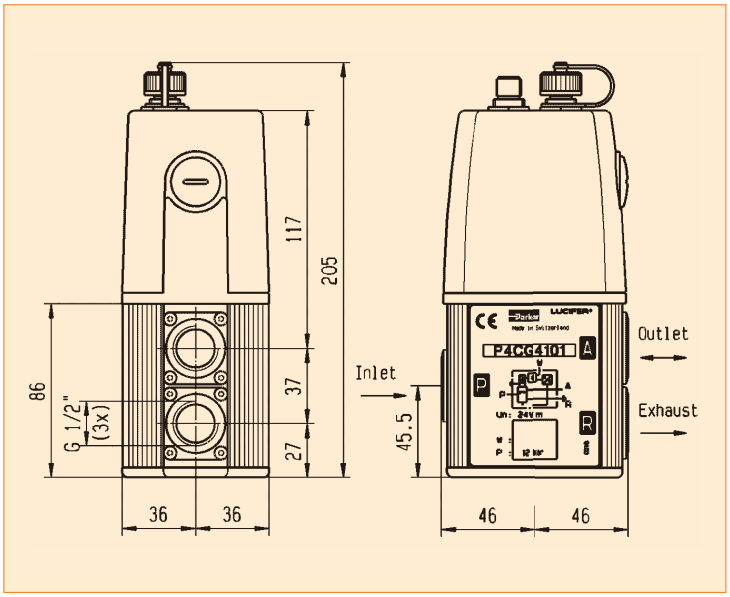

Drawing 9

LUCIFER® EPP4 COMFORT 1" & 2" ATEX

REFERENCES

Codes	Pipe	Max inlet pressure (bar)	Pressure range (bar)		Control signal (see options)	Dimensional Drawing
P4CG6161C001	G1	12	0	10	0-10 V	11
P4CG6161C002	G1	12	0	10	4-20 mA	11
P4CG9161C001	G2	12	0	10	0-10 V	12
P4CG9161C002	G2	12	0	10	4-20 mA	12

Other specific settings or specialties are available, please contact us.

LUCIFER® EPP4 COMFORT 1" & 2" ATEX

DIMENSIONS DRAWINGS EPP4 COMFORT RANGE 1"

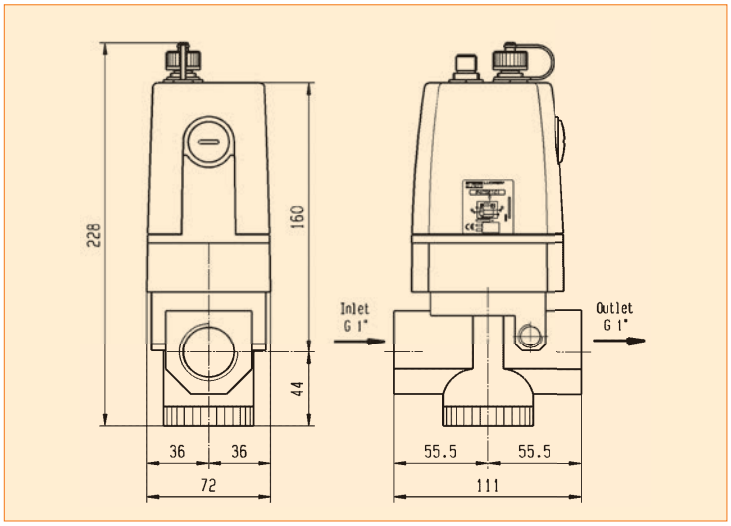

Drawing 11

DIMENSIONS DRAWINGS EPP4 COMFORT RANGE 2"

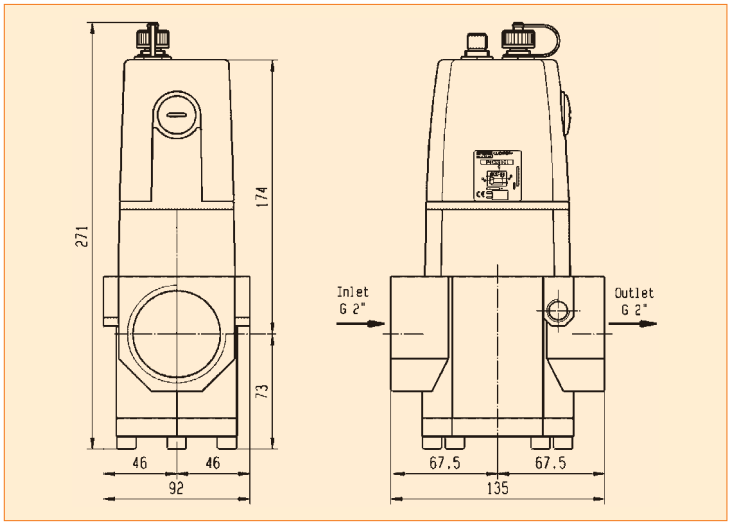

Drawing 12

LUCIFER® EPP4 ACCESSORIES

MOUNTING BRACKETS FOR EPP4 1/4" BASIC / COMFORT

This mounting bracket is delivered as a standard with all EPP4 1/4".

LUCIFER® EPP4 ACCESSORIES

MOUNTING BRACKETS FOR EPP4 1/2" BASIC / COMFORT

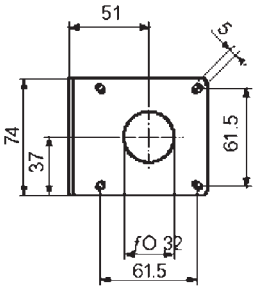

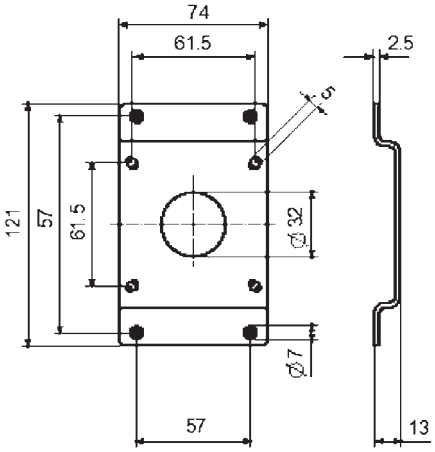

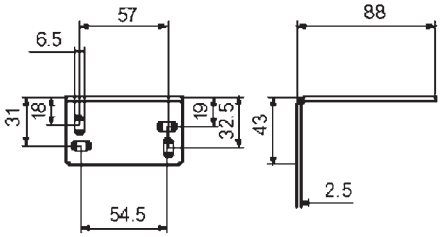

Order reference 491367

Order reference 491366

LUCIFER® EPP4 ACCESSORIES

POWER SUPPLY/CONTROL SIGNAL CABLE FOR BASIC AND COMFORT VERSIONS.

Cable for Basic EPP4

- 2 m cable with moulded straight M12-4 pole

Order Ref. P8L-MC04A2A-M12

Cable for Comfort EPP4

- 2 m cable with moulded straight M12-8 pole

Order Reference 496796

LUCIFER® EPP4 COMFORT ACCESSORIES

calys SOFTWARE

Calys is a unique software in house developed to configurate all the parameters of the EPP4 Comfort range. Calys is an option of the EPP4. A specific cable is needed for the communication between the EPP4 and a PC.

Calys offers many capabilities:

- Live monitoring (control signal, regulated pressure, supply voltage,…)
- Recording of the main parameters (control signal, regulated pressure, supply voltage,…) in an Excel file
- Free calibration for the inputs and outputs
- Adjustable alarm (positive-negative, pressure limits, delays)
- Configuration files easy to duplicate
- Complete and interactive help file

- Data in 4 different pressure units
- Menus in 4 languages (English, German, French and Italian)

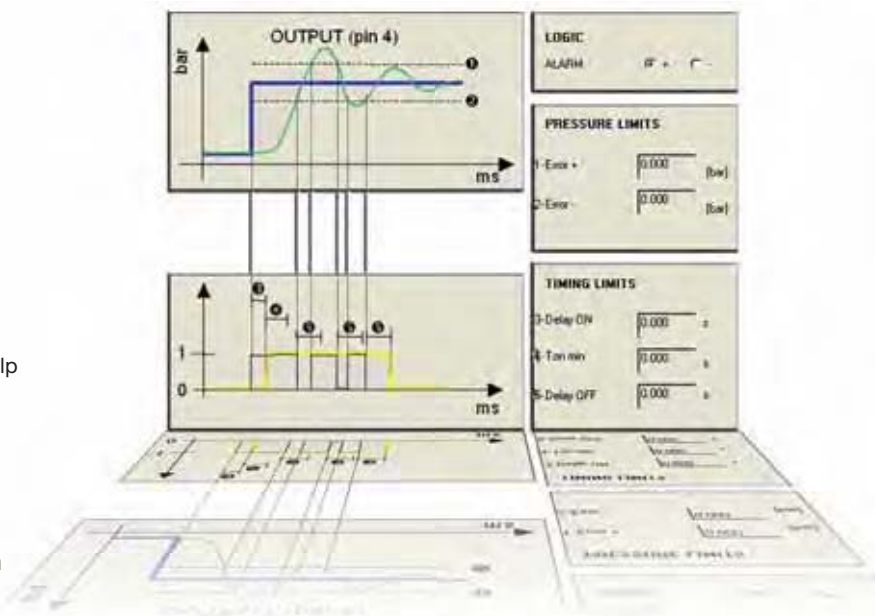

Specific communication cable PC-EPP4 with RS232 and USB connection

Order Reference 496449

This option is for safe area only.

To download free Calys software click on **www.parker.com/FCDE/Support**

LUCIFER® EPP4 COMFORT ACCESSORIES

REMOTE DISPLAY

This option includes the Remote Display and 1.5 meter connecting cable. Connected to the pressure regulator, it offers flexible monitoring. This option only works with EPP4 0-10 bar.

Compact and highly readable remote LED display:

- Bar and PSI scales
- Security lock
- 1.5 m cable
- Mounting brackets

Order the Remote Display under reference 496490

This option is for safe area only.

PANEL MOUNTING KIT

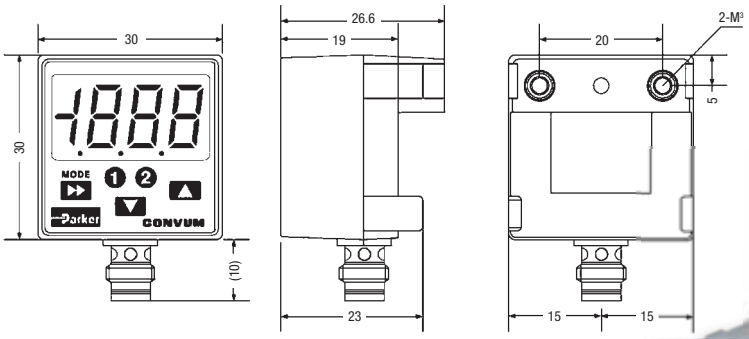

Order the Panel Mounting Kit under reference 496601

A COMPLETE RANGE OF COILS, HOUSINGS AND ELECTRICAL PARTS FOR SOLENOID VALVES

DEFINITIONS

HOUSINGS OR COIL ASSEMBLY KITS, COILS AND ELECTRICAL PARTS

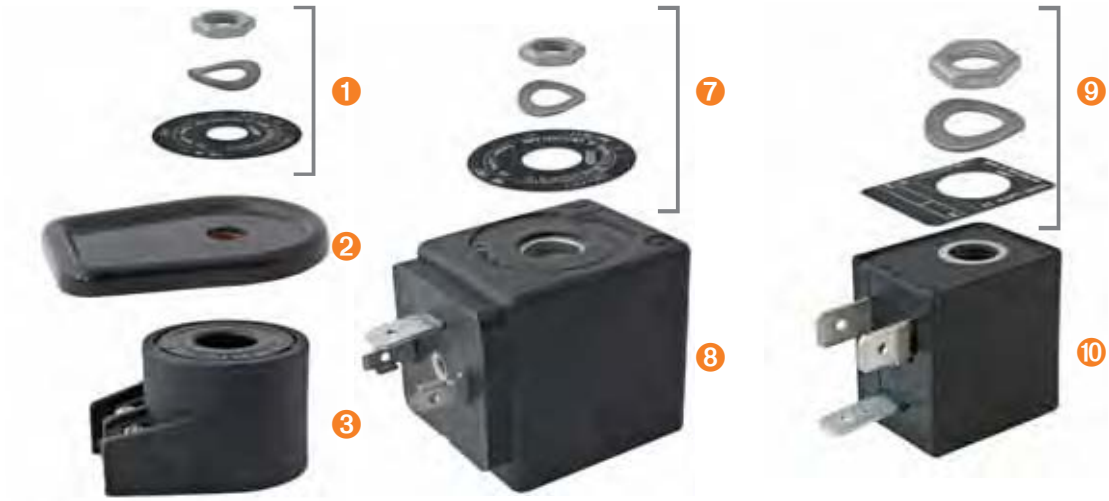

Housing:
We define a **housing** as the combination of the fixing elements including the nameplate 1, the cover 2 or the subplate 6 and the envelope itself 4 or 5 which protects the coil and its electrical components. The housings may be made of metal or plastic material.

Coil assembly kit:
The coil assembly kit 7 or 9 is the set comprising a plate, washer and nut. Sometimes coil assembly kits consist only of a nut or a special fixing device.

Coil:
This consists of the winding and its plastic moulding. There are three different types of coils distinguished by their shape and dimensions: 40 mm 3, 32 mm 8 and 22 mm 10.

Electric part:
The electric part is the set comprising the housing, the assembly kit and the coil.

Attention:
Any Parker FCDE coil or electrical part may be energised only when mounted on a valve.
Otherwise there is a risk of damaging the product and its surroundings (overheating, explosion, fire, etc.).

TABLE OF CONTENT

INTRODUCTION

Index for Explosion Proof Electrical Parts 442

List of Coil Groups 443

COILS

Coils for DIN plug connection 446

Coils with flying leads 469

Coils with screw terminal 474

Coils with ISO-DIN connector 481

EXPLOSION PROOF ELECTRICAL PARTS

Level of protection "nAc nCc" 484

Level of protection "db" 492

Level of protection "mb" 494

Level of protection "db mb" 499

Level of protection "eb" 504

Level of protection "eb mb" 505

Level of protection "ia" 508

HOUSINGS 518

COIL ACCESSORIES 522

EXPLOSIVE ENVIRONMENTS 524

COIL APPENDICES

Guidance chart for IS-Barriers 534

INDEX FOR EXPLOSION PROOF ELECTRICAL PARTS

Coil Reference	Coil Group	Designation	Power DC Pn (W)	Power AC Pn (W)	Ambient Temperature	UL	Degree of Protection	ATEX or NEMA 4X Protection (Gas)	Page
496637	1.2	Explosion proof electrical part "nAc nCc", 22 mm, double frequency	3.0	3.0	-20°C to +50°C	-	IP65	II 3 D Ex tc IIIC T 95°C	485
495880	2.0/2.2	Explosion proof electrical part "nAc nCc", 32 mm	14.0	14.0	-40°C to +50°C	-	IP65	II 3 G Ex nAc nCc IIC T3	489
496155	2.0/2.2	Explosion proof increased safety electrical part "nAc nCc", 50 mm	14.0	14.0	-40°C to +65°C	-	IP67	II 3 G Ex nAc nCc IIC T3	491
495915	4.0	Explosion proof increased safety electrical part "nAc nCc", 50 mm	13.0	11.0	-40°C to +65°C	-	IP67	II 3 G Ex nAc nCc IIC T3	490
495870	2.0/2.1	Explosion proof electrical part "nAc nCc", 32 mm	9.0	8.0	-40°C to +50°C	-	IP65	II 3 G Ex nAc nCc IIC T3/T4	486
495875	3.0	Explosion proof electrical part "nAc nCc", 32 mm	7.0	6.0	-40°C to +50°C	-	IP65	II 3 G Ex nAc nCc IIC T3/T4	488
496110	2.0/2.1	Explosion proof electrical part "nAc nCc", 32 mm	-	9.0	-40°C to +50°C	-	IP65	II 3 G Ex nAc nCc IIC T3/T4	486
495865	1.1	Explosion proof electrical part "nAc nCc", low power, 22 mm	2.5	2.0	-40°C to +50°C	-	IP65	II 3 G Ex nAc nCc IIC T5	484
496125	6.0	Explosion proof electrical part "nAc nCc", low power, 32 mm	1.6	-	-40°C to +50°C	-	IP65	II 3 G Ex nAc nCc IIC T5/T6	487
492670	2.0/2.1	Explosion proof encapsulated electrical part "mb", 32 mm	9.0	8.0	-40°C to +50°C	-	IP65	II 2 G Ex mb IIC T4	495
482605	1.1	Explosion proof encapsulated electrical part "mb", 32 mm	5.0	4.0	-40°C to +65°C	-	IP65	II 2 G Ex mb IIC T4/T5	494
482606	1.1	Explosion proof encapsulated electrical part "mb", low power, 32 mm	2.5	2.0	-40°C to +65°C	-	IP65	II 2 G Ex mb IIC T4/T5	494
492070	2.0/2.1	Explosion proof encapsulated electrical part "mb", with water proof metal housing, 50 mm	8.0	9.0	-40°C to +65°C	-	IP67	II 2 G Ex mb IIC T4/T5	496
HZ10	2.0/2.1	Explosion proof encapsulated electrical part "mb", double frequency	8.0	8.0	-40°C to +85°C	-	IP65	II 2 G - Ex mb IIC T3/T4/T5	497
HZ11	2.0/2.2	Explosion proof encapsulated electrical part "mb", double frequency	14.0	14	-40°C to +85°C	-	IP65	II 2 G - Ex mb IIC T3/T4/T5	498
483270	11.0	Flame proof electrical part "db", 50 mm	8.0	8.0	-40°C to +80°C	-	IP66	II 2 G Ex db IIC T4/T5/T6	492
497105	10.3	Flame proof electrical part "db", 50 mm	8.0	8.0	-50°C to +80°C	-	IP66	II 2 G Ex db IIC T4/T5/T6	493
493640	2.0/2.1	Flame proof encapsulated electrical part "db mb", double frequency	8.0	8.0	-40°C to +75°C	-	IP65	II 2 G Ex db mb IIC T4/T5	503
495905	2.0/2.1	Flame proof encapsulated electrical part "db mb", 37 mm	8.0	8.0	-40°C to +65°C	-	IP67	II 2 G Ex db mb IIC T4	500
496560	10.1	Flame proof encapsulated electrical part "db mb", 37 mm	8.0	8.0	-40°C to +65°C	-	IP67	II 2 G Ex db mb IIC T4	501
496800	10.1	Flame proof encapsulated electrical part "db mb", 37 mm	8.0	8.0	-40°C to +65°C	-	IP67	II 2 G Ex db mb IIC T4	502
495900	6.0	Flame proof encapsulated electrical part "db mb", low power, 37 mm	2.0	2.5	-40°C to +65°C	-	IP67	II 2 G Ex db mb IIC T4/T5/T6	499
496555	10.2	Flame proof encapsulated electrical part "db mb", 37 mm	6.0	6.0	-40°C to +65°C	-	IP67	II 2 G Ex db mb IIC T4/T5/T6	501
496700	10.2	Flame proof encapsulated electrical part "db mb", 37 mm	6.0	6.0	-40°C to +65°C	-	IP67	II 2 G Ex db mb IIC T4/T5/T6	502
494040	2.0/2.1	Explosion proof increased safety electrical part "eb", 50 mm	8.0	8.0	-40°C to +90°C	-	IP67	II 2 G Ex eb IIC T3/T4	504
483371	2.0/2.1	Explosion proof increased safety electrical part "eb", 50 mm	8.0	8.0	-40°C to +65°C	-	IP67	II 2 G Ex eb IIC T4	504
492190	2.0/2.1	Explosion proof increased safety and encapsulated elect. part "eb", 50 mm	9.0	11.0	-40°C to +75°C	-	IP66	II 2 G Ex eb mb IIC T3/T4	507
492310	10.1	Explosion proof increased safety and encapsulated electrical part "eb", 50 mm	6.0	6.0	-40°C to +75°C	-	IP66	II 2 G Ex eb mb IIC T4/T5	505
492210	9.0	Explosion proof increased safety and encapsulated electrical part "eb", " Booster", 50 mm	1.0 to 1.8	-	-40°C to +75°C	-	IP66	II 2 G Ex eb mb IIC T5/T6	506
495910	8.0	Explosion proof intrinsically safe electrical part "ia", "booster", 37 mm	0.3 to 1.2	-	-40°C to +80°C	-	IP67	II 1 G Ex ia IIC T4/T5/T6	509
496565	9.0	Explosion proof intrinsically safe electrical part "ia", " Booster", 37 mm	0.77 to 2.58	-	-40°C to +80°C	-	IP67	II 1 G Ex ia IIC T4/T5/T6	510
483580.01	7.0	Explosion proof intrinsically safe electrical part "ia", 32 mm	3.0	-	-40°C to +55°C	-	IP65	II 1 G Ex ia IIC T6	508
488650.01	7.0	Explosion proof intrinsically safe electrical part "ia", 50 mm	0.3 to 3.0	-	-40°C to +65°C	-	IP66	II 1 G Ex ia IIC T6	513
488660.01	7.0	Explosion proof intrinsically safe electrical part "ia", 50 mm	3.0	-	-40°C to +65°C	-	IP67	II 1 G Ex ia IIC T6	514
488670.01	7.0	Explosion proof intrinsically safe electrical part "ia", 50 mm	0.3 to 3	-	-40°C to +65°C	-	IP65	II 1 G Ex ia IIC T6	515
492965.01	9.0	Explosion proof intrinsically safe electrical part "ia", " Booster", 50 mm	0.3 to 2.3	-	-40°C to +65°C	-	IP66	II 1 G Ex ia IIC T6	511
482870.01	12.0	Explosion proof intrinsically safe electrical part "ia", 50 mm	3.0	-	-40°C to +65°C	-	IP66	II 1 G Ex ia IIC T6	512
490885	7.0	Explosion proof intrinsically safe electrical part, "NEMA", 50 mm	3.0	-	-40°C to +60°C	-	NEMA 4 - 4X	Cl. I, Div.I, Gr. A, B, C, D	513
490890	7.0	Explosion proof intrinsically safe electrical part, "NEMA", 50 mm	3.0	-	-40°C to +60°C	-	NEMA 4 - 4X	Cl. I, Div.I, Gr. A, B, C, D	514
492335	12.0	Explosion proof intrinsically safe electrical part, "NEMA", 50 mm	3.0	-	-40°C to +60°C	-	NEMA 4 - 4X	Cl. I, Div.I, Gr. A, B, C, D	512

LIST OF COIL GROUPS

Parker coils and electrical parts are classified by groups determining their compatibility with Parker solenoid valves.

Group	For application with
1.1	Standard valves or on 2000 Series with standard pilot
1.2	Standard valves or on 2000 Series for high flow
1.3	Standard valves or on 2000 Series of W coil
2.0	Standard valves or on 7000 Series with standard pilot
2.1	Standard valves or on 7000 Series, for coils 8 - 9 W
2.2	Standard valves or on 7000 Series, for coils 14 W
3.0	Standard valves or on 7000 Series with reduced power
4.0	Standard valves or on 7000 Series, for bistable (Impulse) coils or electrical parts
6.0	Special valves "97" or on 7000 Series, for Intrinsicaly safe coils or electrical parts
7.0	Special valves "90", for coils and intrinsically safe electrical parts
8.0	Special valves "97" or on 7000 Series, for Intrinsicaly safe coils or electrical parts with booster
9.0	Special valves "xx" or on 9000 Series, for Intrinsicaly safe coils or electrical parts with booster
10.1	Standard valves or on 9000 Series with standard pilot
10.2	Standard valves or on 9000 Series "db mb"
10.3	Special valves or on 8000 Series "d"
11.0	Standard valves or on 9000 Series "1D"
12.0	Standard valves or on 9000 Series with manual reset
13.0	Special valves or on 7000 Series for Transportation
14.1	Special valves or on 7000 Series for Oil Burners
14.2	Special valves or on 7000 Series for Oil Burners
14.3	Special valves or on 7000 Series for Oil Burners
20.1	Standard valves or on 7000 Series for Z-Y coil
20.2	Standard valves or on 7000 Series for Z-Y "High Power" coil
21.0	Standard valves or on 7000 Series for J-B coil
22.0	Standard valves for KP-KT-KH coil
23.0	Standard valves for XP-XT coil for Oil Burners
24.0	Standard valves for Liquipure coils for Beverage Dispensing

TABLE OF CONTENT

INTRODUCTION

Index for Explosion Proof Electrical Parts 442

List of Coil Groups 443

COILS

Coils for DIN plug connection 446

Coils with flying leads 469

Coils with screw terminal 474

Coils with ISO-DIN connector 481

EXPLOSION PROOF ELECTRICAL PARTS

Level of protection "nAc nCc" 484

Level of protection "db" 492

Level of protection "mb" 494

Level of protection "db mb" 499

Level of protection "eb" 504

Level of protection "eb mb" 505

Level of protection "ia" 508

HOUSINGS 518

COIL ACCESSORIES 522

EXPLOSIVE ENVIRONMENTS 524

COIL APPENDICES

Guidance chart for IS-Barriers 534

COILS FOR DIN PLUG CONNECTION

COILS 32 mm

These coils can be mounted with every Parker solenoid valves corresponding to the specified Coil Group.
See column "Coil Group" within valve pages.

This is an encapsulated assembly comprising a coil, integral magnetic iron path and snap-on plug connection.

The synthetic material encapsulation provides an effective compact housing, offering full protection against dust, oil, water, etc.
Ease of mounting in confined space - offers shock and corrosion protection - simplifies conversion of existing equipment to other requirements, etc.
Coils conform to the IEC/CENELEC safety standards and complies with European low-voltage directive.

Specification			Standard				Double frequency	
Ref. (without DIN plug) Ref. (with DIN plug)			481865 482725				483510 482635	
Coil Group			2.0 / 2.1					
Degree of protection			**IP65** according to IEC / EN 60529 standards (with DIN plug).					
Class of insulation			F 155°C					
Electrical connection			The coil is connected with a 2 P + E plug according to EN 175301-803 type A					
Ambient temperature			-40°C to +50°C The application is limited also by the temperature range of the valve.					
Elect. Power	DC	**Pn** (hot)	9 W				-	
		P (cold) 20°C	12 W				-	
	AC	**Pn** (holding)	8 W				9 W	
		Attraction cold	26 VA (9 W)				32 VA (10 W)	
Weight			130 g (without plug)					
Voltages "Un"			VAC/Hz	Code	VDC	Code	VAC/Hz	Code
-10% to +10% of the Un			24/50 48/50 110/50 220-230/50	A2 A4 A5 3D	24 48 110	C2 C4 C5	24/50, 24/60 48/50, 48/60 110-115/50, 120/60 220-240/50, 240/60	P0 S4 S5 S6

To Order a Coil choose Coil Ref + Voltage Code, example: **481865** for **24 VDC = 481865C2**
More voltage possibilities can be found in the table of voltage codes at the end of the coil section.

These coils must be used with suitable housings, see example below:

The coil assembly kit **Ref. 2995** corresponds to the "housing" of Lucifer® valve numbering system (Valve - housing - coil/voltage).

It is composed of a nameplate giving details of the valve type, a round washer and a nut to ensure the fixing between 32 mm coil and the valve.

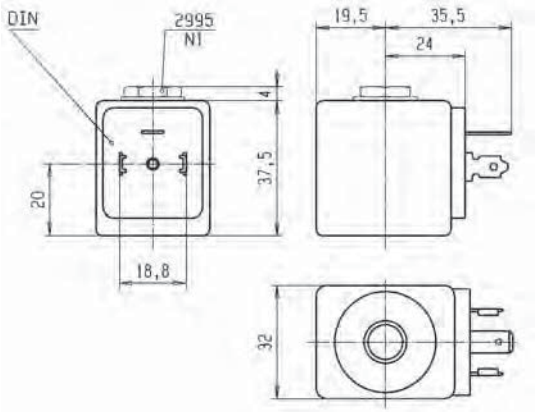

COIL GROUP
2.0/2.1
2.2

COILS FOR DIN PLUG CONNECTION

HIGH TEMPERATURE COILS 32 mm

These coils can be mounted with every Parker solenoid valves corresponding to the specified Coil Group.
See column "Coil Group" within valve pages.

This is an encapsulated assembly comprising a coil, integral magnetic iron path and snap-on plug connection.

The synthetic material encapsulation provides an effective compact housing, offering full protection against dust, oil, water, etc.
Ease of mounting in confined space - offers shock and corrosion protection - simplifies conversion of existing equipment to other requirements, etc.
Coils conform to the IEC/CENELEC safety standards and complies with European low-voltage directive.

Specification			High temperature				High temp. + high power			
Ref. (without DIN plug) Ref. (with DIN plug)			492453 492726				492425 492727			
Coil Group			2.0 / 2.1				2.0 / 2.2			
Degree of protection			**IP65** according to IEC / EN 60529 standards (with DIN plug).							
Class of insulation			H 180°C							
Electrical connection			The coil is connected with a 2 P + E plug according to EN 175301-803 type A							
Ambient temperature			-40°C to +50°C The application is limited also by the temperature range of the valve.							
Elect. Power	DC	**Pn** (hot)	9 W				14 W			
		P (cold) 20°C	12 W				21 W			
	AC	**Pn** (holding)	8 W				14 W			
		Attraction cold	26 VA (9 W)				55 VA (18 W)			
Weight			130 g (without plug)							
Voltages "Un"			VAC/Hz	Code	VDC	Code	VAC/Hz	Code	VDC	Code
-10% to +10% of the Un			24/50 48/50 110/50 220/50-230/50	A2 A4 A5 3D	12 24 48 110	C1 C2 C4 C5	24/50 110/50 230/50	A2 A5 F4	24	C2

To Order a Coil choose Coil Ref + Voltage Code, example: **492453** for **24 VDC= 492453C2**
More voltage possibilities can be found in the table of voltage codes at the end of the coil section.

These coils must be used with suitable housings, see example below:

The coil assembly kit **Ref. 2995** corresponds to the "housing" of Lucifer® valve numbering system (Valve - housing - coil/voltage).

It is composed of a nameplate giving details of the valve type, a round washer and a nut to ensure the fixing between 32 mm coil and the valve.

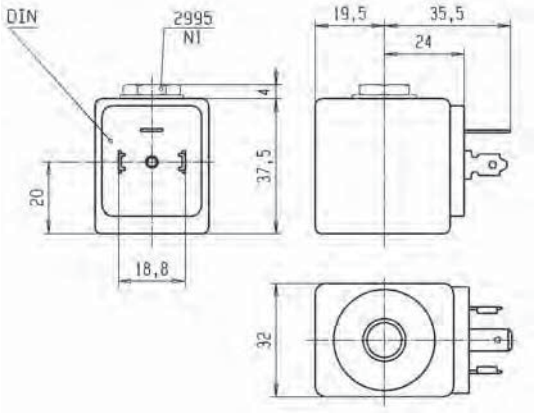

COILS FOR DIN PLUG CONNECTION

REDUCED POWER COIL 32 mm

These coils can be mounted with every Parker solenoid valves corresponding to the specified Coil Group.
See column "Coil Group" within valve pages.

This is an encapsulated assembly comprising a coil, integral magnetic iron path and snap-on plug connection.

The synthetic material encapsulation provides an effective compact housing, offering full protection against dust, oil, water, etc.
Ease of mounting in confined space - offers shock and corrosion protection - simplifies conversion of existing equipment to other requirements, etc.
Coils conform to the IEC/CENELEC safety standards and complies with European low-voltage directive.

Specification			Reduced power			
Ref. (without DIN plug) Ref. (with DIN plug)			482730 482735			
Coil Group			3.0			
Degree of protection			**IP65** according to IEC / EN 60529 standards (with DIN plug).			
Class of insulation			F 155°C			
Electrical connection			The coil is connected with a 2 P + E plug according to EN 175301-803 type A			
Ambient temperature			-40°C to +50°C The application is limited also by the temperature range of the valve.			
Elect. Power	DC	**Pn** (hot)	7 W			
		P (cold) 20°C	9 W			
	AC	**Pn** (holding)	6 W			
		Attraction cold	20 VA (7 W)			
Weight			130 g (without plug)			
Voltages "Un"			VAC/Hz	Code	VDC	Code
-10% to +10% of the Un			48/50	A4	24	C2
			220-230/50	3D	48	C4

To Order a Coil choose Coil Ref + Voltage Code, example: **482730** for **24 VDC** = **482730C2**
More voltage possibilities can be found in the table of voltage codes at the end of the coil section.

These coils must be used with suitable housings, see example below:

The coil assembly kit **Ref. 2995** corresponds to the "housing" of Lucifer® valve numbering system (Valve - housing - coil/voltage).

It is composed of a nameplate giving details of the valve type, a round washer and a nut to ensure the fixing between 32 mm coil and the valve.

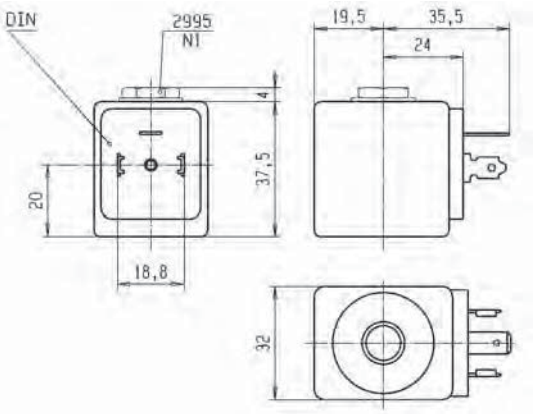

COIL GROUP

6.0

COILS FOR DIN PLUG CONNECTION

LOW POWER COIL 32 mm

These coils can be mounted with every Parker solenoid valves corresponding to the specified Coil Group.
See column "Coil Group" within valve pages.

This is an encapsulated assembly comprising a coil, integral magnetic iron path and snap-on plug connection.

The synthetic material encapsulation provides an effective compact housing, offering full protection against dust, oil, water, etc.
Ease of mounting in confined space - offers shock and corrosion protection - simplifies conversion of existing equipment to other requirements, etc.
Coils conform to the IEC/CENELEC safety standards and complies with European low-voltage directive.

Specification			Miniwatt	
Reference (without DIN plug) Reference (with DIN plug)			482740 482745	
Coil Group			6.0	
Degree of protection			**IP65** according to IEC / EN 60529 standards (with DIN plug).	
Class of insulation			F 155°C	
Electrical connection			The coil is connected with a 2 P + E plug according to EN 175301-803 type A	
Ambient temperature			-40°C to +50°C The application is limited also by the temperature range of the valve.	
Elect. Power	DC	**Pn** (hot)	1.6 W	
		P (cold) 20°C	2.1 W	
	AC	**Pn** (holding)	-	
		Attraction cold	-	
Weight			130 g (without plug)	
Voltages "Un"			VDC	Code
-10% to +10% of the Un			24	C2
			48	C4
			110	C5

To Order a Coil choose Coil Ref + Voltage Code, example: **482740** for **24 VDC** = **482740C2**
More voltage possibilities can be found in the table of voltage codes at the end of the coil section.

These coils must be used with suitable housings, see example below:

The coil assembly kit **Ref. 2995** corresponds to the "housing" of Lucifer® valve numbering system (Valve - housing - coil/voltage).

It is composed of a nameplate giving details of the valve type, a round washer and a nut to ensure the fixing between 32 mm coil and the valve.

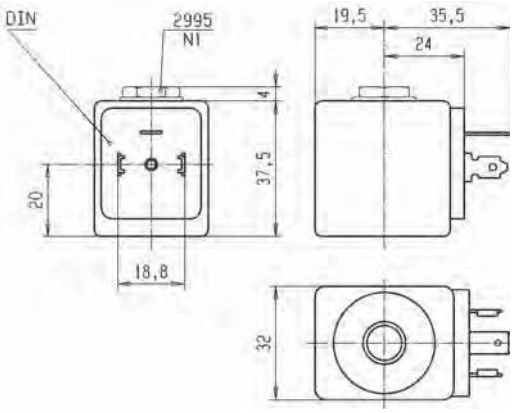

COILS FOR DIN PLUG CONNECTION

UL COIL 32 mm

This coil can be mounted with every Parker solenoid valves corresponding to the specified Coil Group.
See column "Coil Group" within valve pages.

This is an encapsulated assembly comprising a coil, integral magnetic iron path and snap-on plug connection.

The synthetic material encapsulation provides an effective compact housing, offering full protection against dust, oil, water, etc.
Ease of mounting in confined space - offers shock and corrosion protection - simplifies conversion of existing equipment to other requirements, etc.
Coils conform to the IEC/CENELEC safety standards and complies with European low-voltage directive.
DIN plug connector to be ordered separately (see coil accessories section)

Specification			UL-recognized coil - UL File E200N - designation AMIF			
Reference (without DIN plug)			491514			
Coil Group			2.0 / 2.1			
Degree of protection			**IP65** according to IEC / EN 60529 standards (with DIN plug).			
Class of insulation			F (155°C)			
Electrical connection			The coil is connected with a 2 P + E plug according to EN 175301-803 type A			
Ambient temperature			-40°C to 50°C The application is limited also by the temperature range of the valve.			
Elect. Power	DC	**Pn** (hot)	-		12 W	
		P (cold) 20°C	-		16 W	
	AC	**Pn** (holding)	11 W		-	
		Attraction cold	40 VA (13 W)		-	
Weight			130 g (without plug)			
Voltages "Un"			VAC/Hz	Code	VDC	Code
- 15% to +10% of the Un			110/50-120/60 220/50-240/60	P3 Q3	24	C2

To Order a Coil choose Coil Ref + Voltage Code, example: **491514** for **24 VDC** = **491514C2**
More voltage possibilities can be found in the table of voltage codes at the end of the coil section.

These coils must be used with suitable housings, see example below:

The coil assembly kit **Ref. 2995** with non UL valve and Ref. 2995.03 with UL valve correspond to the "housing" of Lucifer® valve numbering system (Valve - housing - coil/voltage).

It is composed of a nameplate giving details of the valve type, a round washer and a nut to ensure the fixing between 32 mm coil and the valve.

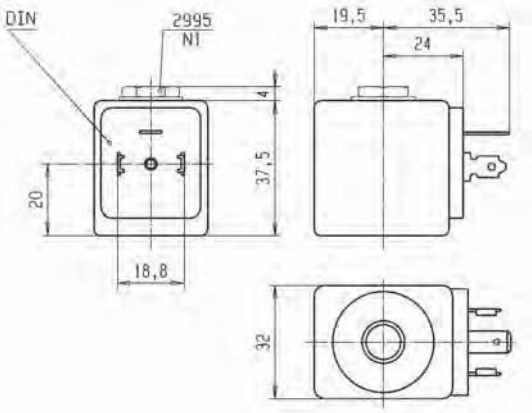

COIL GROUP

14.2

COILS FOR DIN PLUG CONNECTION

UL COIL 32 mm

This coil can be mounted with every Parker solenoid valves corresponding to the specified Coil Group.
See column "Coil Group" within valve pages.

This is an encapsulated assembly comprising a coil, integral magnetic iron path and snap-on plug connection.

The synthetic material encapsulation provides an effective compact housing, offering full protection against dust, oil, water, etc.
Ease of mounting in confined space - offers shock and corrosion protection - simplifies conversion of existing equipment to other requirements, etc.
Coils conform to the IEC/CENELEC safety standards and complies with European low-voltage directive.

Specification			Coil for oil burner - UL recognized	
Reference (without DIN plug)			483764	
Coil group			14.2	
Degree of protection			**IP65** according to IEC / EN 60529 standards (with DIN plug).	
Class of insulation			F 155°C	
Electrical connection			With DIN 43650 A Plug	
Ambient temperature			-40°C to 50°C The application is limited also by the temperature range of the valve.	
Elect. Power	DC	**Pn** (hot)	-	
		P (cold) 20°C	-	
	AC	**Pn** (holding)	9 W	
		Attraction cold	-	
Weight			138 g	
Voltages "Un"			VAC/Hz	Code
- 15% to +10% of the Un			240/50-60 110/50-115/60 230/50-240/60	Q1 Q9 T1

To Order a Coil choose Coil Ref + Voltage Code, example: **483764** for **240/50-60** = **483764Q1**
More voltage possibilities can be found in the table of voltage codes at the end of the coil section.

These coils must be used with suitable housings, see example below:

The coil assembly kit **Ref. 2995** corresponds to the "housing" of Lucifer® valve numbering system (Valve - housing - coil - voltage).

It is composed of a nameplate giving details of the valve type, a round washer and a nut to ensure the fixing between 32 mm coil and the valve.

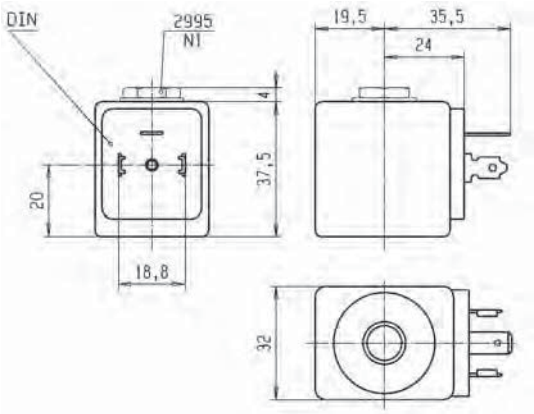

COILS FOR DIN PLUG CONNECTION

COIL 32 mm FOR JET VALVES

This coil can be mounted with every Parker solenoid valves corresponding to the specified Coil Group.
See column "Coil Group" within valve pages.

This is an encapsulated assembly comprising a coil, integral magnetic iron path and snap-on plug connection.

The synthetic material encapsulation provides an effective compact housing, offering full protection against dust, oil, water, etc.
Ease of mounting in confined space - offers shock and corrosion protection - simplifies conversion of existing equipment to other requirements, etc.
Coils conform to the IEC/CENELEC safety standards and complies with European low-voltage directive.
DIN plug connector to be ordered separately (see coil accessories section)

Specification			32 mm coil 14 W			
Reference			483816			
Coil Group			2.2			
Degree of protection			**IP65** according to IEC / EN 60529 standards (with DIN plug).			
Class of insulation			F 155°C			
Electrical connection			The coil is connected with a 2 P + E plug according to EN 175301-803 type A			
Ambient temperature			-40°C to +50°C The application is limited also by the temperature range of the valve.			
Elect. Power	DC	Pn (hot)	14 W			
		P (cold) 20°C	-			
	AC	Pn (holding)	14 W			
		Attraction cold	-			
Weight			160 g			
Voltages "Un"			VAC/Hz	Code	VDC	Code
-10% to +10% of the Un			24/50	A2	24 V	C2

To Order a Coil choose Coil Ref + Voltage Code, example: 483816 for 24 VDC = **483816C2**
More voltage possibilities can be found in the table of voltage codes at the end of the coil section.

These coils must be used with suitable housings, see example below:

The coil assembly kit **Ref. 2995** corresponds to the "housing" of Lucifer® valve numbering system (Valve - housing - coil/voltage).

It is composed of a nameplate giving details of the valve type, a round washer and a nut to ensure the fixing between 32 mm coil and the valve.

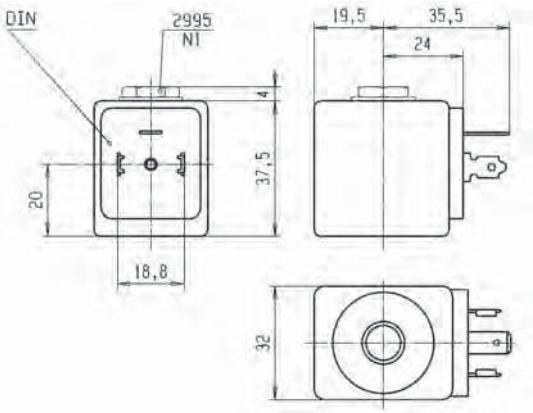

COIL GROUP

1.1

COILS FOR DIN PLUG CONNECTION

COILS 22 mm

These coils can be mounted with every Parker solenoid valves corresponding to the specified Coil Group.
See column "Coil Group" within valve pages.

This coil is designed for valves equipped with a miniature tube assembly (2000 series valves). This is an encapsulated assembly comprising a coil, integral magnetic iron path and snap-on plug connection.

The synthetic material encapsulation provides an effective compact housing, offering full protection against dust, oil, water, etc.
Ease of mounting in confined space - offers shock and corrosion protection - simplifies conversion of existing equipment to other requirements, etc.
Coil conforms to the IEC/CENELEC safety standards and complies with European low-voltage directive.

Specification			Low power				High power			
Ref. (without DIN plug) Ref. (with DIN plug)			488980 481045				481180 481530			
Coil Group			1.1							
Degree of protection			**IP65** according to IEC / EN 60529 standards (with DIN plug).							
Class of insulation			F 155°C							
Electrical connection			The coil is connected with a 2 P + E plug according to EN 175301-803 type B.							
Ambient temperature			-40°C to +50°C The application is limited also by the temperature range of the valve.							
Elect. Power	DC	**Pn** (hot)	2.5 W				5 W			
		P (cold) 20°C	3 W				6.5 W			
	AC	**Pn** (holding)	2 W				4 W			
		Attraction cold	5.7 VA (2.5 W)				8.9 VA (5 W)			
Weight			100 g with DIN Plug							
Voltages "Un"			VAC/Hz	Code	VDC	Code	VAC/Hz	Code	VDC	Code
-10% to +10% of the Un			24/50 48/50 110/50-115/50 220/50-230/50	A2 A4 0A 3D	24 48 110	C2 C4 C5	24/50 110/50-115/50 220/50-230/50	A2 0A 3D	24	C2

To Order a Coil choose Coil Ref + Voltage Code, example: **488980** for **24 VDC** = **488980C2**
More voltage possibilities can be found in the table of voltage codes at the end of the coil section.

These coils must be used with suitable housings, see example below:

The coil assembly kit **Ref. 8993** corresponds to the numbering system for Lucifer® valve housings (Valve - housing - coil/voltage).

It is composed of a nameplate with the details of the valve type, a washer and a nut to secure the 22 mm coil to the valve.

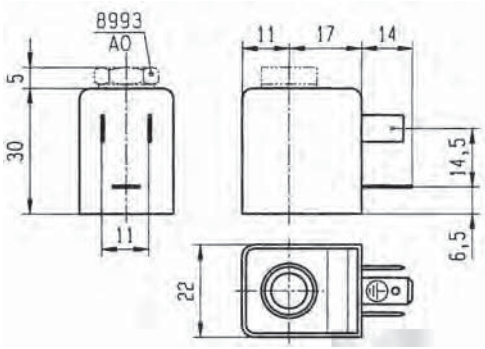

COILS FOR DIN PLUG CONNECTION

UL COIL 22 mm

These coils can be mounted with every Parker solenoid valves corresponding to the specified Coil Group.
See column "Coil Group" within valve pages.

This coil is designed for valves equipped with a miniature tube assembly (2000 series valves). This is an encapsulated assembly comprising a coil, integral magnetic iron path and snap-on plug connection.

The synthetic material encapsulation provides an effective compact housing, offering full protection against dust, oil, water, etc.
Ease of mounting in confined space - offers shock and corrosion protection - simplifies conversion of existing equipment to other requirements, etc.
Coil conforms to the IEC/CENELEC safety standards and complies with European low-voltage directive.

Specification			Standard UL (only if used with 321K, 121M, 131M valves)			
Reference (without DIN plug) Reference (with DIN plug)			492912 492919			
Coil Group			1.1			
Degree of protection			**IP65** according to IEC / EN 60529 standards (with DIN plug).			
Class of insulation			A 105°C for UL/CSA			
Electrical connection			The coil is connected with a 2 P + E plug according to EN 175301-803 type B.			
Ambient temperature			-40°C to +50°C The application is limited also by the temperature range of the valve.			
Elect. Power	DC	**Pn** (hot)	4 W			
		P (cold) 20°C	4.5 W			
	AC	**Pn** (holding)	3 W			
		Attraction cold	7.5 VA (4 W)			
Weight			100 g with DIN Plug			
Voltages "Un"			VAC/Hz	Code	VDC	Code
- 15% to +10% of the Un			48/50-48/60 115/50-120/60	S4 P8	24	C2

To Order a Coil choose Coil Ref + Voltage Code, example: **492912** for **24 VDC** = **492912C2**
More voltage possibilities can be found in the table of voltage codes at the end of the coil section.

These coils must be used with suitable housings, see example below:

The coil assembly kit **Ref. 8993** corresponds to the "housing" of Lucifer® valve numbering system (Valve - housing - coil/voltage).

It is composed of a nameplate giving details of the valve type, a round washer and a nut to ensure the fixing between 22 mm coil and the valve.

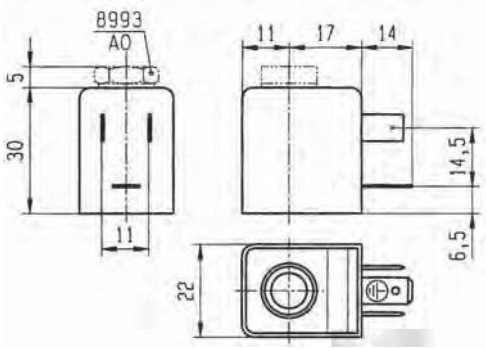

COIL GROUP

1.1

COILS FOR DIN PLUG CONNECTION

DOUBLE FREQUENCY COIL 22 mm

This coil can be mounted with every Parker solenoid valves corresponding to the specified Coil Group.
See column "Coil Group" within valve pages.

This coil is designed for valves equipped with a miniature tube assembly (2000 series valves). This is an encapsulated assembly comprising a coil, integral magnetic iron path and snap-on plug connection.

The synthetic material encapsulation provides an effective compact housing, offering full protection against dust, oil, water, etc.
Ease of mounting in confined space - offers shock and corrosion protection - simplifies conversion of existing equipment to other requirements, etc.
Coil conforms to the IEC/CENELEC safety standards and complies with European low-voltage directive.

DIN plug connector to be ordered separately (see coil accessories section).

Specification			Double frequency	
Reference (without DIN plug)			483590	
Coil group			1.1	
Degree of protection			**IP65** according to IEC / EN 60529 standards (with DIN plug).	
Class of insulation			F 155°C	
Electrical connection			The coil is connected with a 2 P + E plug according to EN 175301-803 type B.	
Ambient temperature			-40°C to +50°C The application is limited also by the temperature range of the valve.	
Elect. Power	DC	**Pn** (hot)	-	
		P (cold) 20°C	-	
	AC	**Pn** (holding)	3 W	
		Attraction cold	7.5 VA (4 W)	
Weight			100 g with DIN Plug	
Voltages "Un"			VAC/Hz	Code
-10% to +10% of the Un			24/50-60	P0
			48/50-60	S4
			110-115/50, 120/60	S5
			220-240/50, 240/60	S6

To Order a Coil choose Coil Ref + Voltage Code, example: **483590** for **24/50,24/60** = **483590P0**
More voltage possibilities can be found in the table of voltage codes at the end of the coil section.

These coils must be used with suitable housings, see example below:

The coil assembly kit **Ref. 8993** corresponds to the "housing" of Lucifer® valve numbering system (Valve - housing - coil/voltage).

It is composed of a nameplate giving details of the valve type, a round washer and a nut to ensure the fixing between 22 mm coil and the valve.

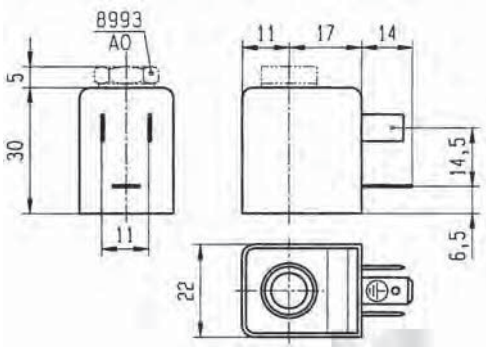

COILS FOR DIN PLUG CONNECTION

DOUBLE FREQUENCY COIL 22 mm

This coil can be mounted with every Parker solenoid valves corresponding to the specified Coil Group.
See column "Coil Group" within valve pages.

This coil is designed for valves equipped with a miniature tube assembly (2000 series valves). This is an encapsulated assembly comprising a coil, integral magnetic iron path and snap-on plug connection.

The synthetic material encapsulation provides an effective compact housing, offering full protection against dust, oil, water, etc.
Ease of mounting in confined space - offers shock and corrosion protection - simplifies conversion of existing equipment to other requirements, etc.
Coil conforms to the IEC/CENELEC safety standards and complies with European low-voltage directive.

DIN plug connector to be ordered separately (see coil accessories section).

Specification			Double frequency	
Reference (without DIN Plug)			488143	
Coil group			1.1	
Degree of protection			**IP65** according to IEC / EN 60529 standards (with DIN plug).	
Class of insulation			F 155°C	
Electrical connection			The coil is connected with a 2 P + E plug according to EN 175301-803 type B.	
Ambient temperature			-40°C to +50°C The application is limited also by the temperature range of the valve.	
Elect. Power	DC	**Pn** (hot)	-	
		P (cold) 20°C	-	
	AC	**Pn** (holding)	2.5 W	
		Attraction cold	-	
Weight			60 g	
Voltages "Un"			VAC/Hz	Code
-10% to +10% of the Un			100/50-60 200/50-60	P1 P6

To Order a Coil choose Coil Ref + Voltage Code, example: **488143** for **100/50-60** = **488143P1**
More voltage possibilities can be found in the table of voltage codes at the end of the coil section.

These coils must be used with suitable housings, see example below:

The coil assembly kit **Ref. 8993** corresponds to the "housing" of Lucifer® valve numbering system (Valve - housing - coil/voltage).

It is composed of a nameplate giving details of the valve type, a round washer and a nut to ensure the fixing between 22 mm coil and the valve.

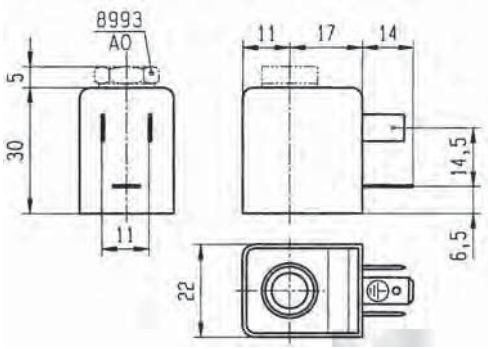

COIL GROUP

1.2

COILS FOR DIN PLUG CONNECTION

DOUBLE FREQUENCY COIL 22 mm

This coil can be mounted with every Parker solenoid valves corresponding to the specified Coil Group.
See column "Coil Group" within valve pages.

This coil is designed for valves equipped with a miniature tube assembly (2000 series valves). This is an encapsulated assembly comprising a coil, integral magnetic iron path and snap-on plug connection.

The synthetic material encapsulation provides an effective compact housing, offering full protection against dust, oil, water, etc.
Ease of mounting in confined space - offers shock and corrosion protection - simplifies conversion of existing equipment to other requirements, etc.
Coil conforms to the IEC/CENELEC safety standards and complies with European low-voltage directive.
DIN plug connector to be ordered separately (see coil accessories section).

Specification			Double frequency			
Reference (without DIN Plug)			496131			
Coil group			1.2			
Degree of protection			**IP65** according to IEC / EN 60529 standards (with DIN plug).			
Class of insulation			F 155°C			
Electrical connection			The coil is connected with a 2 P + E plug according to EN 175301-803 type B.			
Ambient temperature			-40°C to +50°C The application is limited also by the temperature range of the valve.			
Elect. Power	DC	**Pn** (hot)	3 W			
		P (cold) 20°C	-			
	AC	**Pn** (holding)	3 W			
		Attraction cold	-			
Weight			60 g			
Voltages "Un"			VAC/Hz	Code	VDC	Code
-10% to +10% of the Un			24/50-60	P0	24 V	C2
			110/50-60	P2	48 V	C4
			230/50-60	P9	110 V	C5
			48/50-60	S4		

To Order a Coil choose Coil Ref + Voltage Code, example: **496131** for **24 VDC** = **496131C2**
More voltage possibilities can be found in the table of voltage codes at the end of the coil section.

"The housing kit is already included in the valve reference, it is not needed to order it separately."

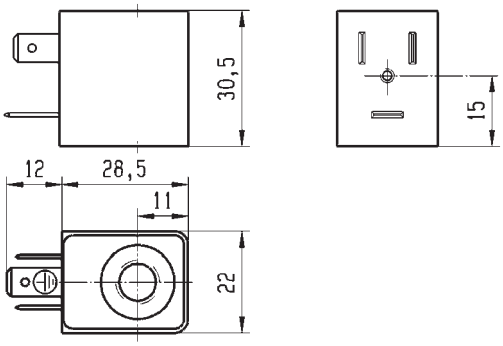

COILS FOR DIN PLUG CONNECTION

DOUBLE FREQUENCY COIL 22 mm

This coil can be mounted with every Parker solenoid valves corresponding to the specified Coil Group.
See column "Coil Group" within valve pages.

This coil is designed for valves equipped with a miniature tube assembly (2000 series valves). This is an encapsulated assembly comprising a coil, integral magnetic iron path and snap-on plug connection.

The synthetic material encapsulation provides an effective compact housing, offering full protection against dust, oil, water, etc.
Ease of mounting in confined space - offers shock and corrosion protection - simplifies conversion of existing equipment to other requirements, etc.
Coil conforms to the IEC/CENELEC safety standards and complies with European low-voltage directive.

DIN plug connector included.

Specification			Double frequency			
Reference			496482			
Coil group			1.2			
Degree of protection			**IP65** according to IEC / EN 60529 standards (with DIN plug).			
Class of insulation			F 155°C			
Electrical connection			The coil is connected with a 2 P + E plug according to EN 175301-803 type B.			
Ambient temperature			-40°C to +50°C The application is limited also by the temperature range of the valve.			
Elect. Power	DC	**Pn** (hot)	3 W			
		P (cold) 20°C	-			
	AC	**Pn** (holding)	3 W			
		Attraction cold	-			
Weight			75 g			
Voltages "Un"			VAC/Hz	Code	VDC	Code
-10% to +10% of the Un			24/50-60	P0	24 V	C2
			110/50-60	P2	48 V	C4
			230/50-60	P9	110 V	C5
			48/50-60	S4		

To Order a Coil choose Coil Ref + Voltage Code, example: **496482** for **24 VDC** = **496482C2**
More voltage possibilities can be found in the table of voltage codes at the end of the coil section.

"The housing kit is already included in the valve reference, it is not needed to order it separately."

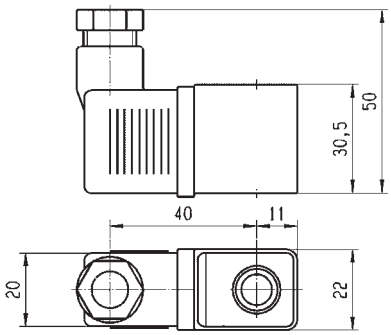

COIL GROUP

1.3

COILS FOR DIN PLUG CONNECTION

WB COIL SERIES 22 mm

These coils can be mounted with every Parker solenoid valves corresponding to the specified Coil Group. See column "Coil Group" within valve pages.

These coils can be mounted with the majority of type 2 operators. Coil manufactured with H class copper wire, moulded in thermoplastic material polyester with 30% glass fiber. IP65 protection rate with DIN 43650A three pin connector and appropriate gasket.

The synthetic material encapsulation provides an effective compact housing, offering full protection against dust, oil, water, etc. Coils conforms to the IEC/ CENELEC safety standards and complies with European low-voltage directive. For UL recognized version: UL file MH19410.

DIN plug connector to be ordered separately (see coil accessories section).

Specification			Standard		UL recognized version		High Power	
Ref. (without DIN plug)			WB4.5 for AC WB5.0 for DC		WB4.5 UR WB5.0 cURus (only 24 VDC)		WB8.0	
Coil Group			1.3					
Degree of protection			**IP65** according to IEC / EN 60529 standards (with DIN plug + gasket)					
Class of insulation			F 155°C		F 155°C		F 155°C	
Electrical connection			The coil is connected with a 2 P + E plug according to EN 175301-803 type B.					
Ambient temperature			-10°C to +50°C The application is limited also by the temperature range of the valve.		-10°C to +50°C		-10°C to +50°C	
Elect. Power	DC	**P** (cold) 20°C	5 W		-		-	
	AC	**Pn** (holding)	4.5 W		4.5 W		8 W	
		Attraction cold	7.5 VA		7.5 VA		11 VA	
Weight			90 g (without plug)					
Voltages "Un"			**WB4.5 VAC/Hz**	**Order Number**	**WB4.5 UR VAC/Hz**	**Order Number**	**WB8.0 VAC/Hz**	**Order Number**
-10% to +10% of Un for AC - 5 % to + 10 % for Un DC			100/50-60 115/50-60 230/50-60 110/50	**302609** **304260** **304262J** **304316**	115/60 208-240/60 24/60	**304087** **304089** **304086**	115/50-60 230/50-60 24/50-60	**302672** **302674** **302670**
			WB5.0 VDC	**Order Number**	**WB5.0 cURus VDC**	**Order Number**		
			110 VDC 12 VDC	**302660** **302652**	24 VDC	**302654**		

To Order a Coil: Use 6 digits ordering number - **Code Example:** WB8.0 for 115/50-60 = **302672**
More voltage possibilities can be found in the table of voltage codes at the end of the coil section.

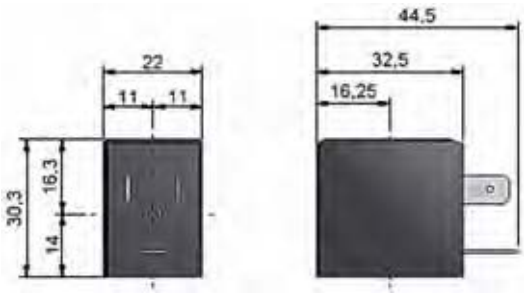

COILS FOR DIN PLUG CONNECTION

ZB COIL SERIES

These coils can be mounted with every Parker solenoid valves corresponding to the specified Coil Group.
See column "Coil Group" within valve pages.

Coil manufactured with H class copper wire, moulded in thermoplastic material polyester with 30% glass fiber.
IP65 protection rate with EN 175301-803:2006-A. Three pin connector.

This coil conforms to the IEC/CENELEC safety standards and complies with European low-voltage directive.

For UL recognized version: UL file MH19410.

DIN plug connector to be ordered separately (see coil accessories section).

Specification			Standard	UL recognized version
Reference (without DIN plug)			ZB09/ZB12	ZB09 for AC only
Coil Group			20.1	
Degree of protection			**IP65** according to IEC / EN 60529 standards (with DIN plug and gasket)	
Class of insulation			F 155°C	
Electrical connection			The coil is connected with a 2 P + E plug according to EN 175301-803 - type A	
Ambient temperature			-10°C to +50°C The application is limited also by the temperature range of the valve.	
Elect. Power	DC	P (cold) 20°C	12 W	
	AC	P (cold) 20°C	9 W	
		Attraction cold	25 VA	
Weight			130 g	

Voltages "Un"	VAC/Hz	Order Number	VDC	Order Number	VAC/Hz	Order Number
-10% to +10% of Un for AC - 5 % to + 10 % for Un DC.	ZB09 24/50-60	**304004**	ZB12 12DC	**304018**	ZB09 24/60	**304048**
	ZB09 12/50-60	**304002**	ZB12 24DC	**304020**	ZB09 110-120/60	**304011**
	ZB09 230/50-60	**304012**	ZB12 110DC	**304022**	ZB09 208-240/60	**304051**
	ZB09 115/50-60	**304010**	ZB12 48VDC	**304021**		
	ZB09 100/50-60	**304009**				
	ZB09 240/50-60	**304014**				
	ZB09 48/50-60	**304008**				
	ZB09 110-120/60	**304011**				
	ZB09 380/50-60	**304016**				

To Order a Coil: Use 6 digits ordering number - **Code Example:** ZB09 24/50-60 = **304004**
More voltage possibilities can be found in the table of voltage codes at the end of the coil section.

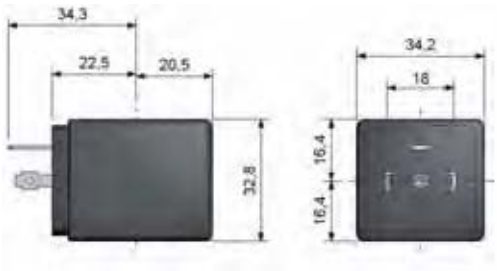

COIL GROUP

20.2

COILS FOR DIN PLUG CONNECTION

ZB/ZH HIGH POWER - HIGH TEMPERATURE COIL SERIES

These coils can be mounted with every Parker solenoid valves corresponding to the specified Coil Group.
See column "Coil Group" within valve pages.

Coil manufactured with H class copper wire, moulded in thermoplastic material polyester with 30% glass fiber.
IP65 protection rate with EN 175301-803:2006-A. Three pin connector.

This coil conforms to the IEC/CENELEC safety standards and complies with European low-voltage directive.

DIN plug connector to be ordered separately (see coil accessories section).

Specification			High power				High temperature + high power			
Ref. (without DIN plug)			ZB14/ZB16				ZH14/ZH16			
Coil Group			20.2							
Degree of protection			**IP65** according to IEC / EN 60529 standards (with DIN plug and gasket)							
Class of insulation			H 180°C							
Electrical connection			The coil is connected with a 2 P + E plug according to EN 175301-803 - type A							
Ambient temperature			ZB14/ZB16 -10°C to +50°C The application is limited also by the temperature range of the valve.				ZH14/ZH16 -10°C to +80°C			
Elect. Power	DC	P (cold) 20°C	16 W							
	AC	P (cold) 20°C	14 W							
		Attraction cold	33 VA							
Weight			130 g (without plug)							
Voltages "Un"			VAC/Hz	Order Number	VDC	Order Number	VAC/Hz	Order Number	VDC	Order Number
-10% to +10% of Un for AC - 5 % to + 10 % for Un DC			ZB14 12/50-60	**304052**	ZB16 12DC	**304068**	ZH14 24/50-60	**304100**	ZH16 24DC	**304112**
			ZB14 24/50-60	**304054**	ZB16 24DC	**304070**	ZH14 115/50-60	**304102**	ZH16 12DC	**304110**
			ZB14 100/50-60	**304084**	ZB16 110DC	**304072**	ZH14 230/50-60	**304104**		
			ZB14 115/50-60	**304060**						
			ZB14 230/50-60	**304062**						
			ZB14 240/50-60	**304064**						
			ZB14 380/50-60	**304066**						
			ZB14 48/50-60	**304058**						

To Order a Coil: Use 6 digits ordering number - **Code Example:** ZH16 for 24 VDC = **304112**
More voltage possibilities can be found in the table of voltage codes at the end of the coil section.

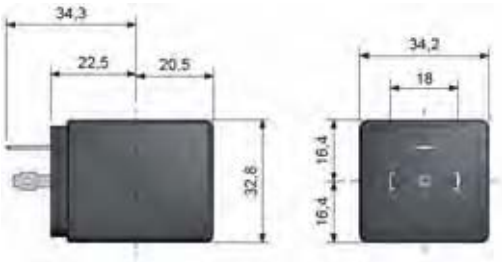

COILS FOR DIN PLUG CONNECTION

JB COIL SERIES

These coils can be mounted with every Parker solenoid valves corresponding to the specified Coil Group.
See column "Coil Group" within valve pages.

Coil manufactured with H class copper wire, moulded in thermoplastic material polyester with 30% glass fiber.
IP65 protection rate with EN 175301-803:2006-A. Three pin connector.

This coil conforms to the IEC/CENELEC safety standards and complies with European low-voltage directive.

DIN plug connector to be ordered separately (see coil accessories section).

Specification			Standard			
Ref. (without DIN plug)			JB14/JB16			
Coil Group			21.0			
Degree of protection			**IP65** according to IEC / EN 60529 standards (with DIN plug and gasket)			
Class of insulation			F 155°C			
Electrical connection			The coil is connected with a 2 P + E plug according to EN 175301-803 - Type A			
Ambient temperature			-10°C to +50°C The application is limited also by the temperature range of the valve.			
Elect. Power	DC	**P** (cold) 20°C	16 W			
	AC	**P** (cold) 20°C	14 W			
		Attraction cold	55 VA			
Weight			130 g (without plug)			
Voltages "Un"			VAC/Hz	Order Number	VDC	Order Number
-10% to +10% of Un for AC - 5 % to + 10 % for Un DC.			JB14 24/50-60 JB14 115/50-60 JB14 230/50-60 JB14 240/50-60	**304900** **304910** **304915** **304920**	JB16 12DC JB16 24DC JB16 196DC	**304945** **304950** **304958**

To Order a Coil: Use 6 digits ordering number - **Code Example:** JB16 for 12 VDC = **304945**
More voltage possibilities can be found in the table of voltage codes at the end of the coil section.

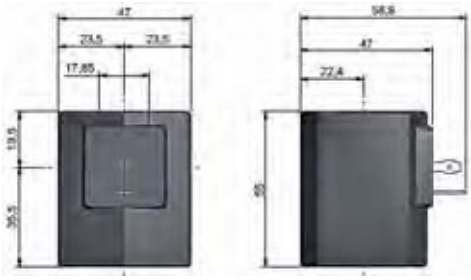

COIL GROUP

22.0

COILS FOR DIN PLUG CONNECTION

KT/KH COIL SERIES

These coils can be mounted with every Parker solenoid valves corresponding to the specified Coil Group.
See column "Coil Group" within valve pages.

Coil manufactured with H class copper wire, moulded in thermoplastic material polyester with 30% glass fiber.
IP65 protection rate with EN 175301-803:2006-A. Three pin connector.

This coil conforms to the IEC/CENELEC safety standards and complies with European low-voltage directive.

DIN plug connector to be ordered separately (see coil accessories section).

Specification			Standard	High Temperature
Ref. (without DIN plug)			KT09/KT10	KH09
Coil Group			22.0	
Degree of protection			**IP65** according to IEC / EN 60529 standards (with DIN plug and gasket)	
Class of insulation			F 155°C	H 180°C
Electrical connection			The coil is connected with a 2 P + E plug according to EN 175301-803 - Type A	
Ambient temperature			-10°C to +50°C The application is limited also by the temperature range of the valve.	-10°C to +80°C
Elect. Power	DC	P (cold) 20°C	10 W	-
	AC	P (cold) 20°C	9 W	9 W
		Attraction cold	20 VA	20 VA
Weight			150 g (without plug)	

Voltages "Un"	VAC/Hz	Order Number	VDC	Order Number	VAC/Hz	Order Number
-10% to +10% of Un for AC - 5 % to + 10 % for Un DC	KT09 24/50	**304621**	KT10 12DC	**304666**	KH09 24/50	**304746**
	KT09 115/50	**304631**	KT10 24DC	**304971**	KH09 230/50	**304748**
	KT09 208-230/60	**304656**				
	KT09-230/50	**304639**				
	KT09 240/50	**304641**				

To Order a Coil: Use 6 digits ordering number - **Code Example:** KT10 for 12VDC = **304666**
More voltage possibilities can be found in the table of voltage codes at the end of the coil section.

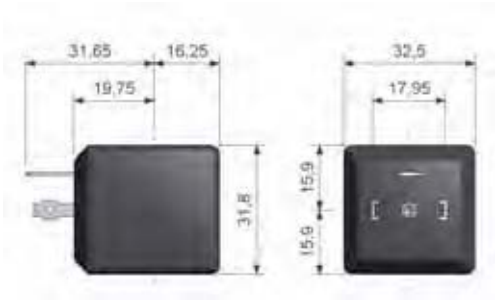

COILS FOR DIN PLUG CONNECTION

XT09 COIL SERIES

This coil can be mounted with every Parker solenoid valves corresponding to the specified Coil Group.
See column "Coil Group" within valve pages.

Coil manufactured with H class copper wire, moulded in thermoplastic material polyester with 30% glass fiber. IP54 protection rate with special 2P+E connection. Special plug with integrated powercord available separately.

This coil conforms to the IEC/CENELEC safety standards and complies with European low-voltage directive.

DIN plug connector to be ordered separately (see coil accessories section).

Specification			For Heating Applications	
Ref. (without DIN plug)			XT09	
Coil Group			23.0	
Degree of protection			**IP54** according to IEC / EN 60529 standards (with special plug supplied separately)	
Class of insulation			F 155°C	
Electrical connection			Special 2 P + E plug connection	
Ambient temperature			-10°C to +50°C The application is limited also by the temperature range of the valve.	
Elect. Power	DC	**P** (cold) 20°C	-	
	AC	**P** (cold) 20°C	9 W	
		Attraction cold	22 VA	
Weight			150 g (without plug)	
Voltages "Un"			VAC/Hz	Order Number
-10% to +10% of Un for AC			XT09 230/50	**304776**

To Order a Coil: Use 6 digits ordering number **- Code Example:** XT09 230/50 = **304776**
More voltage possibilities can be found in the table of voltage codes at the end of the coil section.

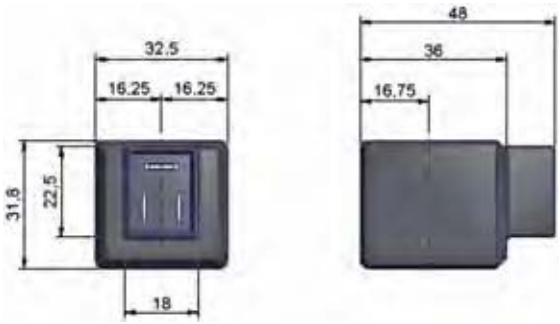

COIL GROUP

24.0

COILS FOR DIN PLUG CONNECTION

D4 SERIES - UL COILS 32 mm

This coil is UL-approved as a recognized component for the insulation Class 155, conforms to the IEC/CENELEC safety standards and complies with European low-voltage directive.

DIN plug connector to be ordered separately (see coil accessories section).

Specification			UL Recognized			
Reference (without DIN plug)			D4 Series			
Coil group			24.0			
Degree of protection			**IP65** according to IEC / EN 60529 standards (with DIN plug)			
Class of insulation			F 155°C			
Electrical Connection			The coil is connected with a 2 P + E plug according to EN 175301-803 type A			
Ambient temperature			-40°C to +50°C The application is limited also by the temperature range of the valve.			
Elect. Power	DC	**Pn** (hot)	12 W			
		P (cold) 20°C	16 W			
	AC	**Pn** (holding)	11 W			
		Attraction cold	13VA			
Weight			130 g			
Voltages "Un"			**VAC/Hz**	**Code**	**VDC**	**Code**
-10% to +10% of Un for AC - 5 % to + 10 % for Un DC.			24/60 110/50 - 120/60 220/50 - 240/60	D4E D4F D4G	24	D4B

To Order a Coil: Use 6 digits ordering number - **Code Example:** D4 for 24VAC/60Hz = **D4E**
More voltage possibilities can be found in the table of voltage codes at the end of the coil section.

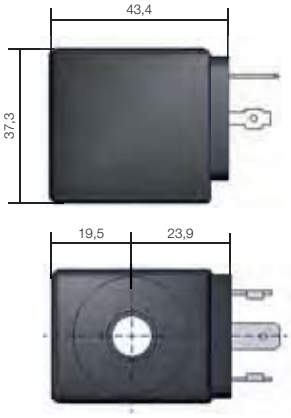

COILS FOR DIN PLUG CONNECTION

D5 COIL SERIES 32 mm

Encapsulated in synthetic material, Connector for 2P+E according with DIN EN 175301-803, Form A, IP65 degree of protection to be considered with connector plug only.

This coil conforms to the IEC/CENELEC safety standards and complies with European low-voltage directive.

DIN plug connector to be ordered separately (see coil accessories section).

Specification			Mono Frequency VDE Coil			
Reference (without DIN plug)			D5 Series			
Coil group			24.0			
Degree of protection			**IP65** according to IEC / EN 60529 standards (with DIN plug)			
Class of insulation			F 155°C			
Electrical connection			The coil is connected with a 2 P + E plug according to EN 175301-803 type A.			
Ambient temperature			-40°C to +50°C The application is limited also by the temperature range of the valve.			
Elect. Power	DC	**Pn** (hot)	9 W			
		P (cold) 20°C	-			
	AC	**P** (cold) 20°C	8 W			
		Attraction cold	40 VA			
Weight			130 g			
Voltages "Un"			VAC/Hz	Code	VDC	Code
-10% to +10% of Un for AC - 5 % to + 10 % for Un DC.			24/50 110/50 220-230/50 24/60 230/60 115/60	D5H D5XA5 D5L D5E D5XJ3 D5XK8	24	D5B

To Order a Coil: Use 6 digits ordering number - **Code Example:** D5 for 24 VAC/60 Hz = **D5E**
More voltage possibilities can be found in the table of voltage codes at the end of the coil section.

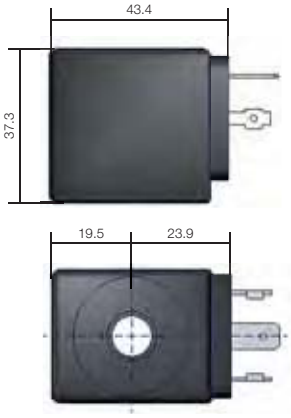

COIL GROUP

24.0

COILS FOR DIN PLUG CONNECTION

XS03 COIL SERIES 32 mm

Encapsulated in synthetic material, Connector for 2P+E according with DIN EN 175301-803, Form A, IP65 degree of protection to be considered with connector plug only.

This coil conforms to the IEC/CENELEC safety standards and complies with European low-voltage directive.

DIN plug connector to be ordered separately (see coil accessories section).

Specification			Bi- Frequency VDE Coil	
Reference (without DIN plug)			XS03 Series	
Coil group			24.0	
Degree of protection			**IP65** according to IEC / EN 60529 standards (with DIN plug)	
Class of insulation			F 155°C	
Electrical Connection			The coil is connected with a 2 P + E plug according to EN 175301-803 type A	
Ambient temperature			-40°C to +50°C The application is limited also by the temperature range of the valve.	
Elect. Power	DC	**Pn** (hot)	-	
		P (cold) 20°C	-	
	AC	**Pn** (holding)	9 W	
		Attraction cold	32 VA	
Weight			130 g	
Voltages "Un"			VAC/Hz	Code
-10% to +10% of Un for AC			24/50 - 24/60 110-115/50 - 120/60 220-240/50 - 240/60	XS03M XS03XS5 XS03XS6

To Order a Coil: Use 6 digits ordering number **- Code Example:** XS03 for 24/50-24/60 = **XS03M**
More voltage possibilities can be found in the table of voltage codes at the end of the coil section.

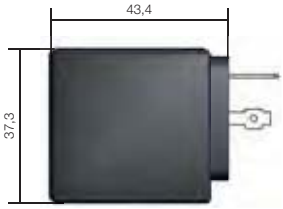

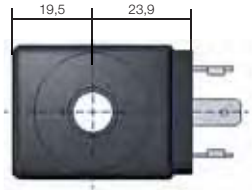

COILS FOR DIN PLUG CONNECTION

COIL FOR OIL AND GAS 37 mm

This coil can be mounted with every Parker solenoid valves corresponding to the specified Coil Group.
See column "Coil Group" within valve pages.
This is an encapsulated assembly comprising a coil, integral magnetic iron path and snap-on plug connection.
The synthetic material encapsulation provides an effective compact housing, offering full protection against dust, oil, water, etc.
Ease of mounting in confined space - offers shock and corrosion protection - simplifies conversion of existing equipment to other requirements, etc.
Coils conform to the IEC/CENELEC safety standards and complies with European low-voltage directive. DIN plug connector included (The AC electrical connection is delivered with a rectifier bridge).

Specification			Coil for Oil and Gas			
Reference (with DIN plug)			496895			
Coil group			10.1			
Degree of protection			**IP65** according to IEC / EN 60529 standards			
Class of insulation			H 180°C			
Electrical connection			With DIN plug 492459 (AC) or 486586 (DC)			
Ambient temperature			-40°C to +50°C The application is limited also by the temperature range of the valve.			
Elect. Power	DC	**Pn** (hot)	8 W			
		P (cold) 20°C	-			
	AC	**Pn** (holding)	8 W			
		Attraction cold	-			
Weight			273 g			
Voltages "Un"			VAC/Hz	Code	VDC	Code
-10% to +10% of the Un			230/50-60	P9	24	C2
			110/50-60	P2	48	C4
			24/50-60	P0	110	C5
			48/50-60	S4		

To Order a Coil choose Coil Ref + Voltage Code, example: **496895** for **24 VDC** = **496895C2**
More voltage possibilities can be found in the table of voltage codes at the end of the coil section.
The fixing nut (housing kit) is already inclued in the coil kit.

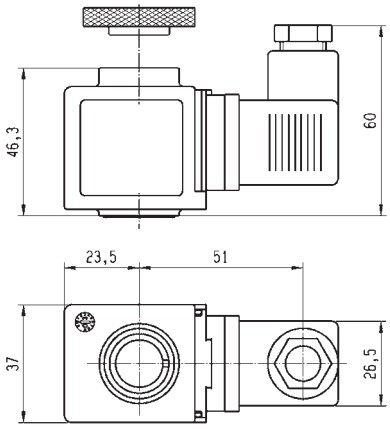

COIL GROUP

20.1

COILS WITH FLYING LEADS

YB COIL SERIES IP67

These coils can be mounted with every Parker solenoid valves corresponding to the specified Coil Group.
See column "Coil Group" within valve pages.

Coil manufactured with H class copper wire, moulded in thermoplastic material polyester with 30% glass fiber.
IP67 protection rate. Electrical connection: 2 x 1000 mm cables.

This coil conforms to the IEC/CENELEC safety standards and complies with European low-voltage directive.

For UL recognized version: UL file MH19410.

Specification			Standard	UL recognized version
Reference			YB09/YB12	YB09
Coil Group			20.1	
Degree of protection			**IP67** according to IEC / EN 60529 standards	
Class of insulation			F 155°C	
Electrical connection			The coil is connected with a 2 x 1000 mm flying leads integrated.	
Ambient temperature			-10°C to +50°C The application is limited also by the temperature range of the valve.	
Elect. Power	DC	**P** (cold) 20°C	12 W	-
	AC	**Pn** (holding)	9 W	9 W
		Attraction cold	24 VA	24 VA
Weight			150 g	

Voltages "Un"	VAC/Hz	Order Number	VDC	Order Number	VAC/Hz	Order Number
-10% to +10% of Un for AC - 5 % to + 10 % for Un DC.	YB09 115/50-60 YB09 230/50-60 YB09 24/50-60 YB09 240/50-60	**304396** **304398** **304390** **304400**	YB12 12DC YB12 24DC	**304412** **304416**	YB09 24/60 YB09 110-120/60 YB09 208-240/60	**304481** **304488** **304483**

To Order a Coil: Use 6 digits ordering number - Code Example: YB09 for 24 VAC/60 Hz = 304481
More voltage possibilities can be found in the table of voltage codes at the end of the coil section.

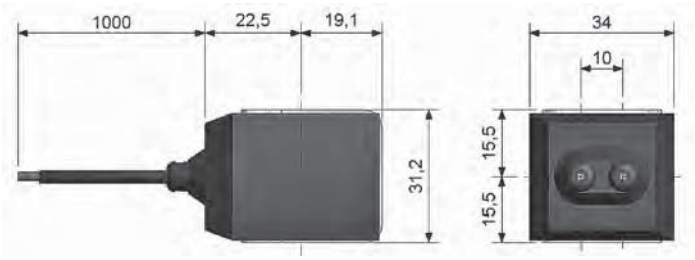

COILS WITH FLYING LEADS

LA COIL SERIES 32 mm IP67

Encapsulated in synthetic material. Degree of protection IP67 as per IEC/EN60529.

Connection: 2 x 500 mm cables.

This coil conforms to the IEC/CENELEC safety standards and complies with European low-voltage directive.

Specification			Coil with two 500 mm flying leads			
Reference			LA Series			
Coil group			24.0			
Degree of protection			**IP67** according to IEC / EN 60529 standards			
Class of insulation			F 155°C			
Ambient temperature			-10°C to +50°C The application is limited also by the temperature range of the valve.			
Elect. Power	DC	**Pn** (hot)	9 W			
		P (cold) 20°C	-			
	AC	**Pn** (holding)	9 W			
		Attraction cold	32 VA			
Weight			180 g			
Voltages "Un"			VAC/Hz	Code	VDC	Code
-10% to +10% of Un for AC - 5 % to + 10 % for Un DC.			24/50 - 24/60 110-115/50 - 120/60 220-240/50 - 240/60	LAM LAXS5 LAXS6	24	LAB

To Order a Coil: Use 6 digits ordering number **- Code Example:** LA Series for 24 VDC **= LAB**
More voltage possibilities can be found in the table of voltage codes at the end of the coil section.

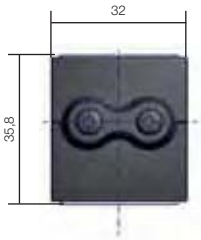

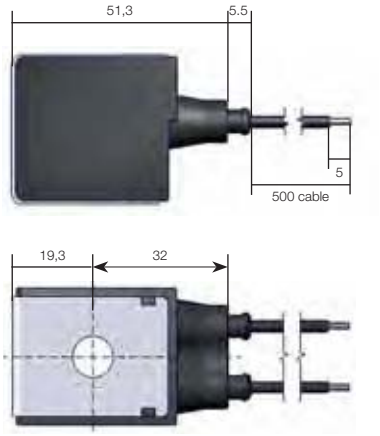

COIL GROUP

24.0

COILS WITH FLYING LEADS

LB-LC COIL SERIES 32 mm UL IP67

Encapsulated in synthetic material. Degree of protection IP67 as per IEC/EN60529.

Connection: 2 x 500mm cables.

This coil is UL-approved as a recognized component for the insulation Class 155, conforms to the IEC/CENELEC safety standards and complies with European low-voltage directive.

Specification			UL Coil with two 500 mm flying leads			
Reference			LB-LC Series			
Coil group			24.0			
Degree of protection			**IP67** according to IEC / EN 60529 standards			
Class of insulation			F 155°C			
Ambient temperature			-10°C to +50°C The application is limited also by the temperature range of the valve.			
Elect. Power	DC	**Pn** (hot)	16 W			
		P (cold) 20°C	-			
	AC	**Pn** (holding)	13-14 W			
		Attraction cold	40 VA			
Weight			180 g			
Voltages "Un"			VAC/Hz	Code	VDC	Code
-10% to +10% of Un for AC - 5 % to + 10 % for Un DC			24/60 110/50 - 120/60 208-240/60 220/50 240/60	LBE LBF LBXU3 LBG	24	LCB

To Order a Coil: Use 6 digits ordering number - **Code Example:** LB-LC for 24 VDC = **LCB**
More voltage possibilities can be found in the table of voltage codes at the end of the coil section.

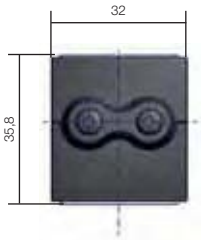

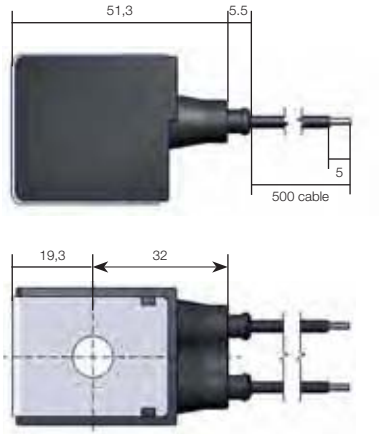

COIL 32 mm IP67

This coil can be mounted with every Parker solenoid valves corresponding to the specified Coil Group.
See column "Coil Group" within valve pages.

This is an encapsulated assembly comprising a coil, integral magnetic iron path and snap-on plug connection.

The synthetic material encapsulation provides an effective compact housing, offering full protection against dust, oil, water, etc.
Ease of mounting in confined space - offers shock and corrosion protection - simplifies conversion of existing equipment to other requirements, etc.
Coils conform to the IEC/CENELEC safety standards and complies with European low-voltage directive.

Specification			Coil with two 500 mm flying leads			
Reference			496081			
Coil Group			2.0 / 2.1			
Degree of protection			**IP67** according to IEC / EN 60529 standards			
Class of insulation			F 155°C			
Ambient temperature			-40 °C to +50°C The application is limited also by the temperature range of the valve.			
Elect. Power	DC	**Pn** (hot)	9 W			
		P (cold) 20°C	-			
	AC	**Pn** (holding)	9 W			
		Attraction cold	32 VA			
Weight			180 g			
Voltages "Un"			VAC/Hz	Order Number	VDC	Order Number
-10% to +10% of Un for AC - 5 % to + 10 % for Un DC			24/50 - 24/60 110-115/50 - 120/60 220-240/50 - 240/60	**439816** **439820** **439822**	24 12	**439818** **439814**

To Order a Coil: Use 6 digits ordering number - Code Example: 496081 for 24 VDC = 439818
More voltage possibilities can be found in the table of voltage codes at the end of the coil section.

For Parker Lucifer® valves please order housing Ref: 2995

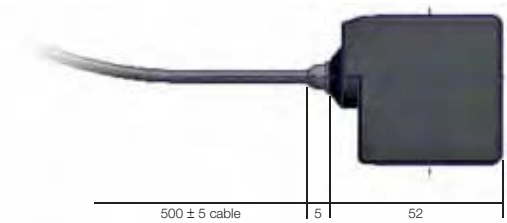

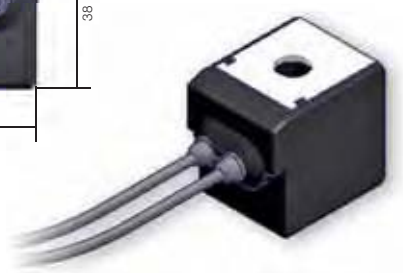

COIL GROUP

2.0/2.2

COILS WITH FLYING LEADS

COIL 32 mm IP67 UL

This coil can be mounted with every Parker solenoid valves corresponding to the specified Coil Group.
See column "Coil Group" within valve pages.

This is an encapsulated assembly comprising a coil, integral magnetic iron path and snap-on plug connection.

The synthetic material encapsulation provides an effective compact housing, offering full protection against dust, oil, water, etc.
Ease of mounting in confined space - offers shock and corrosion protection - simplifies conversion of existing equipment to other requirements, etc.
Coils conform to the IEC/CENELEC safety standards and complies with European low-voltage directive.

Specification			UL Coil with two 500 mm flying leads			
Reference			496082			
Coil Group			2.0 / 2.2			
Degree of protection			**IP67** according to IEC / EN 60529 standards			
Class of insulation			F 155°C			
Ambient temperature			-40°C to +50°C The application is limited also by the temperature range of the valve.			
Elect. Power	DC	Pn (hot)	16 W			
		P (cold) 20°C	-			
	AC	Pn (holding)	13-14 W			
		Attraction cold	40 VA			
Weight			180 g			
Voltages "Un"			VAC/Hz	Order Number	VDC	Order Number
-10% to +10% of Un for AC - 5 % to + 10 % for Un DC			24/60 110/50 - 120/60 208-240/60 220/50 - 240/60	**439826** **439828** **439824** **439834**	24 12	**439832** **439830**

To Order a Coil: Use 6 digits ordering number - Code Example: 496082 for 24 VDC= 439832
More voltage possibilities can be found in the table of voltage codes at the end of the coil section.

For Parker Lucifer® valves please order housing Ref: 2995

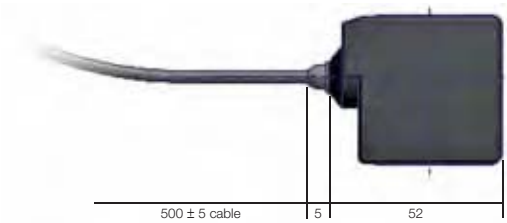

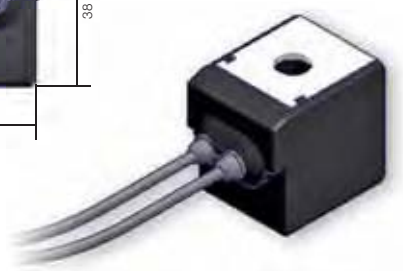

COIL GROUP

2.0/2.1

COILS WITH SCREW TERMINALS

STANDARD COILS 40 mm

These coils can be mounted with every Parker Solenoid Valves corresponding to the specified Coil Group.
See column "Coil Group" within valve pages.

They can be mounted with all metal housings.

The coil winding is completely encapsulated in synthetic material.

Easy mounting in confined spaces. Electrical connection with screw terminals for wire up to 1.5 mm².

Coils conform to the IEC/CENELEC safety standards and complies with European low-voltage directive.

Specification			Standard				Double Frequency	
Reference			481000				483520	
Coil Group			2.0 / 2.1					
Class of insulation			F 155°C					
Ambient temperature			-40°C to +50°C The application is limited also by the temperature range of the valve..					
Elect. Power	DC	Pn (hot)	8W				-	
		P (cold) 20°C	9W				-	
	AC	Pn (holding)	8W				9W	
		Attraction cold	32 VA (9 W)				36 VA (10 W)	
Weight			130 g				130 g	
Voltages "Un"			VAC/Hz	Code	VDC	Code	VAC/Hz	Code
-10% to +10% of the Un (-15 % to +5 % for double-frequency coil with voltage code S6 if 240 V/50/Hz is used).			24/50 48/50 110/50-115/50 220/50-230/50	A2 A4 0A 3D	24 48 110	C2 C4 C5	24/50-60 220-240/50-240/60	P0 S6

To Order a Coil choose Coil Ref + Voltage Code, example: **4828** for **24 VDC** = **481000C2**
More voltage possibilities can be found in the table of voltage codes at the end of the coil section.

These coils must be used with suitable housings, see examples below:

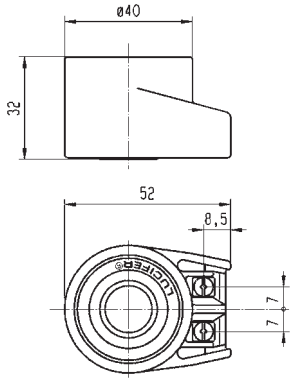

Ref. 4270 - Protection **IP 44** according to IEC / EN 60529 standard (with cable gland)

Ref. 4538 - Protection **IP 67** according to IEC / EN 60529 standard

COIL GROUP

2.0/2.2

COILS WITH SCREW TERMINALS

HIGH POWER COILS 40 mm

This coil can be mounted with every Parker Solenoid Valves corresponding to the specified Coil Group.
See column "Coil Group" within valve pages.

They can be mounted with all metal housings.

The coil winding is completely encapsulated in synthetic material.

Easy mounting in confined spaces. Electrical connection with screw terminals for wire up to 1.5 mm².

Coils conform to the IEC/CENELEC safety standards and complies with European low-voltage directive.

Specification			High Power	
Reference			481044	
Coil Group			2.0 / 2.2	
Class of insulation			F 155°C	
Ambient temperature			-40°C to +50°C The application is limited also by the temperature range of the valve.	
Elect. Power	DC	Pn (hot)	-	
		P (cold) 20°C	-	
	AC	Pn (holding)	14 W	
		Attraction cold	56 VA (20 W)	
Weight			130 g	
Voltages "Un"			VAC/Hz	Code
-10% to +10% of the Un			24/50	A2
			110/50	A5
			220/50	A7
			230/50	F4

To Order a Coil choose Coil Ref + Voltage Code, example: **481044** for **24VAC/50Hz = 481044A2**
More voltage possibilities can be found in the table of voltage codes at the end of the coil section.

These coils must be used with suitable housings, see examples below:

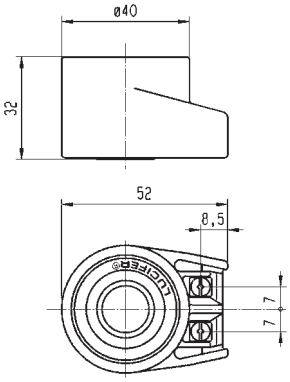

Ref. 4270 - Protection **IP 44** according to IEC / EN 60529 standard (with cable gland)

Ref. 8520 - Protection **IP 67** according to IEC / EN 60529 standard

COIL GROUP
2.0/2.1 2.2

COILS WITH SCREW TERMINALS

HIGH TEMPERATURE COILS 40 mm

These coils can be mounted with every Parker Solenoid Valves corresponding to the specified Coil Group.
See column "Coil Group" within valve pages.

They can be mounted with all metal housings.

The coil winding is completely encapsulated in synthetic material.

Easy mounting in confined spaces. Electrical connection with screw terminals for wire up to 1.5 mm².

Coils conform to the IEC/CENELEC safety standards and complies with European low-voltage directive.

Specification			High Temperature				High Temperature & High Power			
Reference			485100				486265			
Coil Group			2.0 / 2.1				2.0 / 2.2			
Class of insulation			H 180°C							
Ambient temperature			-40°C to +50°C The application is limited also by the temperature range of the valve.							
Elect. Power	DC	Pn (hot)	8 W				14 W			
		P (cold) 20°C	9 W				21 W			
	AC	Pn (holding)	8 W				14 W			
		Attraction cold	32 VA (9 W)				56 VA (20 W)			
Weight			140 g							
Voltages "Un"			VAC/Hz	Code	VDC	Code	VAC/Hz	Code	VDC	Code
-10% to +10% of the Un			24/50 380/50-440/60 220/50-230/50	A2 5P 3D	24	C2	24/50 110/50 220/50 230/50	A2 A5 A7 F4	12 24 48	C1 C2 C4

To Order a Coil choose Coil Ref + Voltage Code, example: **485100** for **24VAC/50Hz = 485100A2**
More voltage possibilities can be found in the table of voltage codes at the end of the coil section.

These coils must be used with suitable housings, see examples below:

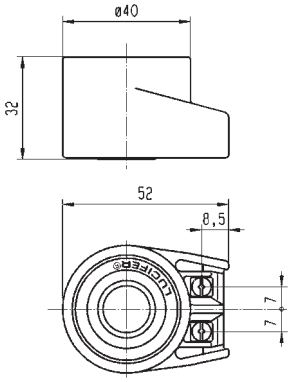

Ref. 4270 - Protection **IP 44** according to IEC / EN 60529 standard (with cable gland)

Ref. 8520 - Protection **IP 67** according to IEC / EN 60529 standard

COIL GROUP

14.1

COILS WITH
SCREW TERMINALS

HIGH TEMPERATURE & HIGH POWER COILS 40 mm OIL BURNER

This coils can be mounted with every Parker Solenoid Valves corresponding to the specified Coil Group.
See column "Coil Group" within valve pages.

It can be mounted with all metal housings.

The coil winding is completely encapsulated in synthetic material.

Easy mounting in confined spaces. Electrical connection with screw terminals for wire up to 1.5 mm².

Coil conform to the IEC/CENELEC safety standards and complies with European low-voltage directive.
This coil is used only in safety application according to DIN/EN/ISO 23551-1:2009-10 (Oil burners)

Specification			High Temperature & High Power	
Reference			483824	
Coil Group			14.1	
Class of insulation			H 180°C	
Ambient temperature			-40°C to +50°C The application is limited also by the temperature range of the valve.	
Elect. Power	DC	**Pn** (hot)	19 W	
		P (cold) 20°C	19 W	
	AC	**Pn** (holding)	19 W	
		Attraction cold	56 VA (20 W)	
Weight			130 g	
Voltages "Un"			VAC/Hz	Code
-10% to +10% of the Un			120/50	A6
			240/50	A8
			110/60	B5
			220/60	B7
			58/50-60/60	T6
			55/60	4J

To Order a Coil choose Coil Ref + Voltage Code, example: **483824** for **120/50** = **483824A6**
More voltage possibilities can be found in the table of voltage codes at the end of the coil section.

These coils must be used with suitable housings, Ref: 8760.24 and Ref: 8520.23

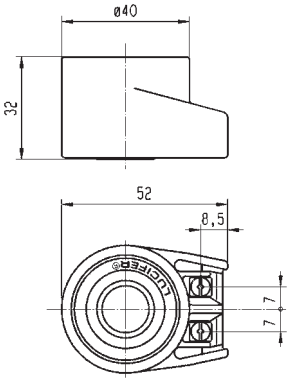

Ref. 8760.24

Ref. 8520.23

HIGH TEMPERATURE & HIGH POWER COILS 40 mm OIL BURNER

This coils can be mounted with every Parker Solenoid Valves corresponding to the specified Coil Group.
See column "Coil Group" within valve pages.

It can be mounted with all metal housings.

The coil winding is completely encapsulated in synthetic material.

Easy mounting in confined spaces. Electrical connection with screw terminals for wire up to 1.5 mm².

Coil conform to the IEC/CENELEC safety standards and complies with European low-voltage directive.
This coil is used only in safety application according to DIN/EN/ISO 23551-1:2009-10 (Oil burners)

Specification			High Temperature & High Power	
Reference			483541	
Coil Group			14.3	
Class of insulation			H 180°C	
Ambient temperature			-40°C to +50°C The application is limited also by the temperature range of the valve.	
Elect. Power	DC	Pn (hot)	20 W	
		P (cold) 20°C	20 W	
	AC	Pn (holding)	20 W	
		Attraction cold	56 VA (20 W)	
Weight			130 g	
Voltages "Un"			VAC/Hz	Code
-10% to +10% of the Un			120/50	A6
			240/50	A8
			110/60	B5
			220/60	B7
			58/50-60/60	T6
			55/60	4J

To Order a Coil choose Coil Ref + Voltage Code, example: **483541** for **120/50** = **483541A6**
More voltage possibilities can be found in the table of voltage codes at the end of the coil section.

These coils must be used with suitable housings, Ref: 8760.24 and Ref: 8520.23

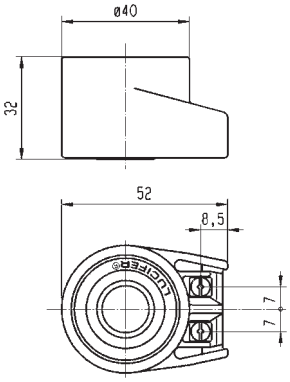

Ref. 8760.24

Ref. 8520.23

COIL GROUP

2.0/2.1

COILS WITH
SCREW TERMINALS

COIL DOUBLE FREQUENCY 40 mm H CLASS

This coil can be mounted with every Parker Solenoid Valves corresponding to the specified Coil Group.
See column "Coil Group" within valve pages.

They can be mounted with all metal housings.

The coil winding is completely encapsulated in synthetic material.

Easy mounting in confined spaces. Electrical connection with screw terminals for wire up to 1.5 mm².

Coils conform to the IEC/CENELEC safety standards and complies with European low-voltage directive.

Specification			Double Frequency 100 V - 200 V	
Reference			488553	
Coil Group			2.0/2.1	
Class of insulation			H 180°C	
Ambient temperature			-40°C to +50°C The application is limited also by the temperature range of the valve.	
Elect. Power	DC	Pn (hot)	-	
		P (cold) 20°C	-	
	AC	Pn (holding)	9 W	
		Attraction cold	-	
Weight			130 g	
Voltages "Un"			VAC/Hz	Code
-10% to +10% of the Un			100/50-60 200/50-60	P1 P6

To Order a Coil choose Coil Ref + Voltage Code, example: **488553** for **110/50-60** = **488553P1**
More voltage possibilities can be found in the table of voltage codes at the end of the coil section.

These coils must be used with suitable housings, see examples below:

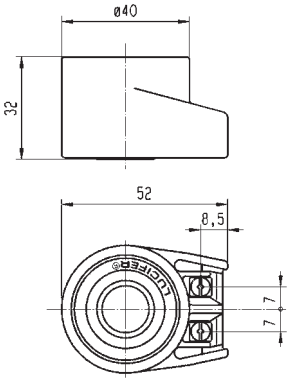

Ref. 4270 - Protection **IP 44**

Ref. 8520 - Protection **IP 54**

COILS WITH SCREW TERMINALS

BISTABLE COILS 40 mm FOR IMPULSE APPLICATIONS

These coils can be mounted with every Parker solenoid valves corresponding to the specified Coil Group.

See column "Coil Group" within valve pages.

These coils are specially designed for Lucifer® bistable (or impulse or magnetic latch) solenoid valves for Heating Applications.

They can be mounted only with the Lucifer® metallic housing 4269 or 4538. The coil winding is completely encapsulated in synthetic material.
Easy mounting in confined spaces. Electrical connection with screw terminals for wire up to 1.5 mm².

Coils conform to the IEC/CENELEC safety standards and complies with European low-voltage directive.

Specification			Bistable (Impulse)			
Reference			484990		485400	
Coil Group			4.0			
Class of insulation			F 155°C			
Ambient temperature			-40°C to +50°C The application is limited also by the temperature range of the valve.			
Length of impulses			Switch on (terminals A-B): minimum 50 ms Switch off (terminals A-C): minimum 35 ms			
Electr. Power consuption	DC	Attraction (hot)	-		13 W	
		Attraction (cold)	-		19 W	
		Release (hot)	-		8 W	
		Release (cold)	-		10 W	
	AC	Attraction (hot)	11 W		-	
		Attraction (cold)	17 W		-	
		Release (hot)	4 W		-	
		Release (cold)	7 W		-	
Weight			150 g			
Voltages "Un"			VAC/Hz	Code	VDC	Code
-10% to +10% of the Un			24/50-24/60	P0	24	C2
			48/50-48/60	S4	48	C4
			110-115/50-115/60	1P	110	C5
			220-230/50-60	3P		

To Order a Coil choose Coil Ref + Voltage Code, example: **485400** for **24 VDC** = **485400C2**
More voltage possibilities can be found in the table of voltage codes at the end of the coil section.

These coils must be used with suitable housings, see examples below:

DIAGRAM

Alternating Current

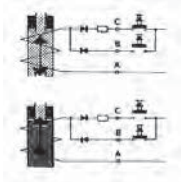

Direct Current

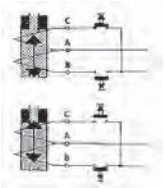

Only an electrical impulse given to terminals A-C reverses the magnetic field. This magnetic field demagnetises the reversible magnet enough to allow the return spring to bring the plunger back to its initial position and close the valve.

Ref. 4269 - Protection **IP 44**

Ref. 4538 - Protection **IP 67**

COIL GROUP

13.0

COILS WITH ISO-DIN CONNECTORS

COILS 12 V - 24 V FOR TRANSPORTATION APPLICATIONS 32 mm

These coils can be mounted with every Parker solenoid valves corresponding to the specified Coil Group.

See column "Coil Group" within valve pages.

These coils are specially designed for Lucifer® solenoid valves for Transportation Applications.
They can be mounted with the standard Lucifer® housing 2161 or customized housing.

The coil winding is completely encapsulated in epoxy.
Easy mounting and dismounting in confined spaces. Bayonet twist and lock coupling for tight, vibration resistant connection.

Coils conform to the IEC/CENELEC safety standards and complies with European low-voltage directive.

Specification			Transportation			
Reference			**496193** with diode		**495294** without diode	
Coil Group			**13.0**			
Degree of protection			**IP69K** for DIN 400050 part 9			
Ambiant temperature			- 40°C to +120°C The application is limited also by the temperature range of the valve and duty cycle of the valve.			
Insulation Class			F 155°C			
Electrical connection			ISO 15170-A1-2.3-Sn/K2		DIN 72585-A3-2.1	
Elect. Power	DC	**Pn** (hot)	9 w			
		P (cold) 20°C	-			
	AC	**Pn** (holding)	-			
		Attraction cold	-			
Weight			147 g			
Voltages "Un"			VDC	Code	VDC	Code
- 30% to + 30% of the Un			12 24	C1 C2	12 24	C1 C2

To Order a Coil choose Coil Ref + Voltage Code, example: **496193** for **24 VDC** = **496193C2**

These coils must be used with suitable housings Ref.2168 for 12Vdc and 2169 for 24 VDC.

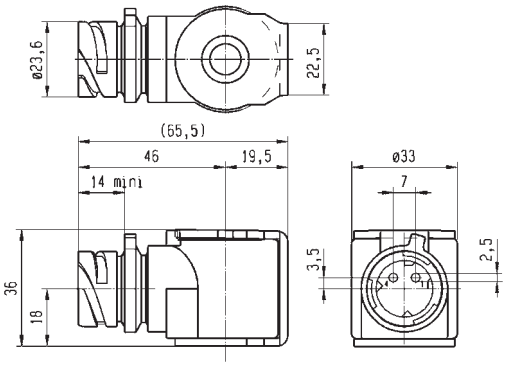

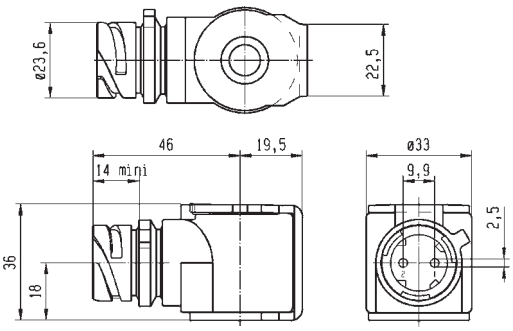

TABLE OF CONTENT

INTRODUCTION

Index for Explosion Proof Electrical Parts 442
List of Coil Groups 443

COILS

Coils for DIN plug connection 446
Coils with flying leads 469
Coils with screw terminal 474
Coils with ISO-DIN connector 481

EXPLOSION PROOF ELECTRICAL PARTS

Level of protection "nAc nCc" 484
Level of protection "db" 492
Level of protection "mb" 494
Level of protection "db mb" 499
Level of protection "eb" 504
Level of protection "eb mb" 505
Level of protection "ia" 508

HOUSINGS 518

COIL ACCESSORIES 522

EXPLOSIVE ENVIRONMENTS 524

COIL APPENDICES

Guidance chart for IS-Barriers 534

ELECTRICAL PART LOW POWER 22 mm

This coil can be mounted with every Parker ATEX solenoid valves corresponding to the specified Coil Group.

See column "Coil Group" within valve pages.

Application:
Control of solenoid valves in dangerous areas where explosion-proof protection Ex nAc nCc IIC T5 is required.

Benefits:
The synthetic material encapsulation of the coil provides an effective compact housing, offering full protection against dust, oil, water, etc.
Small size for ease of mounting in confined spaces.

Reference			495865			
Certificate			LCIE 05 ATEX 6003 X			
Coil Group			1.1			
Type of protection		Gas	II 3 G Ex nAc nCc IIC T5			
		Dust	II 3 D - Ex tc IIIC - T 95°C			
Degree of protection			**IP65** (with plug) according to IEC/EN 60529 Standards			
Ambiant temperature			-40°C to +50°C The application is limited also by the temperature range of the valve.			
Insulation Class			F 155°C			
Electrical connection			These coils with connection 2P + G - when mounted together with the supplied Pg 9 plug (delivered with the coil),			
Elect. Power	DC	**Pn** (hot)	2.5 W			
		P (cold) 20°C	3 W			
	AC	**Pn** (holding)	2 W			
		Attraction cold	5.7 VA (2.5 W)			
Weight			120 g			
Voltages "Un"			VAC/Hz	Code	VDC	Code
-10% to +10% of the Un			24/50	A2	24	C2
			48/50	A4	48	C4
			110/50-115/50	0A		
			220/50-230/50	3D		

To Order a Coil choose Coil Ref + Voltage Code, example: **495865** for **24 VDC** = **495865C2**

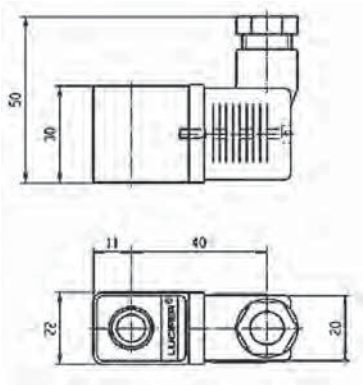

COIL GROUP

1.2

ELECTRICAL PARTS
"nAc nCc"

ELECTRICAL PART DOUBLE FREQUENCY 22 mm

This coil can be mounted with every Parker ATEX solenoid valves corresponding to the specified Coil Group.

See column "Coil Group" within valve pages.

Application:
Control of solenoid valves in dangerous areas where explosion-proof protection Ex nAc nCc IIC T5 is required.

Benefits:
The synthetic material encapsulation of the coil provides an effective compact housing, offering full protection against dust, oil, water, etc.
Small size for ease of mounting in confined spaces.

Specification			Double Frequency			
Reference			496637			
Certificate			ATEX			
Coil group			1.2			
Type of protection		Gas	Ex nAc nCc IIC T5			
		Dust	II 3 D - Ex tc IIIC - T 95°C			
Degree of protection			**IP65** (with plug) according to IEC/EN 60529 Sandards			
Ambiant temperature			-20°C to +50°C The application is limited also by the temperature range of the valve.			
Insulation Class			F 155°C			
Elect. Power	DC	**Pn** (hot)	3 W			
		P (cold) 20°C	-			
	AC	**Pn** (holding)	3 W			
		Attraction cold	5.7 VA (2.5 W)			
Weight			75 g			
Voltages "Un"			VAC/Hz	Code	VDC	Code
-10% to +10% of the Un			24/50-60	P0	24 V	C2
			110/50-60	P2	48 V	C4
			230/50-60	P9	110 V	C5
			48/50-60	S4		

To Order a Coil choose Coil Ref + Voltage Code, example: **496637** for **24 VDC** = **496637C2**

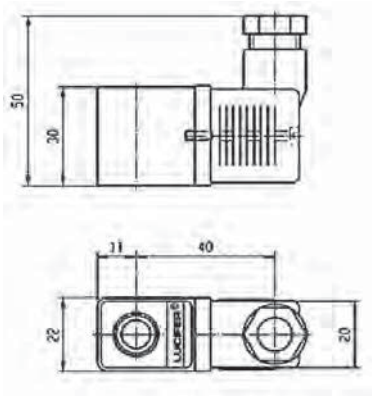

ELECTRICAL PARTS "nAc nCc"

ELECTRICAL PART 32 mm

These coils can be mounted with every Parker ATEX solenoid valves corresponding to the specified Coil Group.
See column "Coil Group" within valve pages.

Application: Control of solenoid valves in dangerous areas where explosion-proof protection Ex nAc nCc IIC T3/T4 is required.
Ease of mounting in confined space - offers shock and corrosion protection-simplifies conversion of existing equipment to other requirements, etc.

Benefits:
The synthetic material encapsulation of the coil provides an effective compact housing, offering full protection against dust, oil, water, etc.
Small size for ease of mounting in confined spaces.

Reference			495870				496110	
Certificate			LCIE 05 ATEX 6003 X					
Coil Group			2.0 / 2.1					
Type of protection		Gas	II 3 G Ex nAc nCc IIC T3/T4				II 3 G Ex nAc nCc IIC T3/T4	
		Dust	II 3 D - Ex tc IIIC - T195°C / T130°C				II 3 D - Ex tc IIIC - T195°C / T130°C	
Degree of protection			**IP65** (with plug) according to IEC/EN 60529 Standards					
Insulation Class			F (155°C)					
Duty cycle			100%					
Ambiant temperature			-40°C to +65°C / 50°C The application is limited also by the temperature range of the valve.					
Elect. Power	DC	Pn (hot)	9 W				-	
		P (cold) 20°C	12 W				-	
	AC	Pn (holding)	8 W				9 W	
		Attraction cold	26 VA (9 W)				32 VA (10 W)	
Weight			150 g					
Voltages "Un"			VAC/Hz	Code	VDC	Code	VAC/Hz	Code
-10% to +10% of the Un			24/50	A2	24	C2	24/50-60	P0
			48/50	A4	48	C4	48/50-60	S4
			110/50	A5	110	C5	110/50-60	S5
			220-230/50	3D			220/50-60	S6

To Order a Coil choose Coil Ref + Voltage Code, example: **495870** for **24 VDC** = **495870C2**

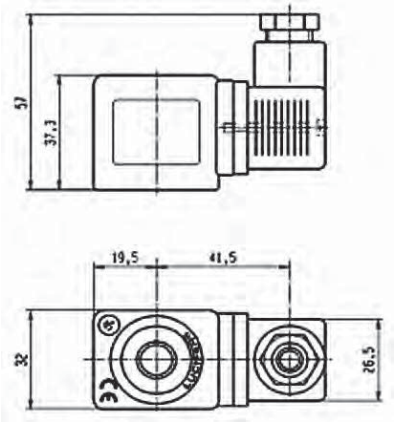

COIL GROUP

6.0

ELECTRICAL PARTS
"nAc nCc"

ELECTRICAL PART LOW POWER 32 mm

This coil can be mounted with every Parker ATEX solenoid valves corresponding to the specified Coil Group.
See column "Coil Group" within valve pages.

Application: Control of solenoid valves in dangerous areas where explosion-proof protection Ex nAc nCc IIC T5/T6 is required.
Ease of mounting in confined space - offers shock and corrosion protection-simplifies conversion of existing equipment to other requirements, etc.

Benefits:
The synthetic material encapsulation of the coil provides an effective compact housing, offering full protection against dust, oil, water, etc.
Small size for ease of mounting in confined spaces.

Reference			496125	
Certificate			LCIE 05 ATEX 6003 X	
Coil group			6.0	
Type of protection	Gas		II 3 G Ex nAc nCc IIC T5/T6	
	Dust		II 3 D Ex tc IIIC T95°C/80°C	
Degree of protection			**IP65** (with plug) according to IEC/EN 60529 Standards	
Insulation Class			F (155°C)	
Duty cycle			100%	
Ambiant temperature			-40°C to +65°C / 50°C The application is limited also by the temperature range of the valve.	
Elect. Power	DC	**Pn** (hot)	1.6 W	
		P (cold) 20°C	2.1 W	
	AC	**Pn** (holding)	-	
		Attraction cold	-	
Weight			150 g	
Voltages "Un"			VDC	Code
-10% to +10% of the Un			24	C2
			48	C4
			110	C5

To Order a Coil choose Coil Ref + Voltage Code, example: **496125** for **24 VDC** = **496125C2**

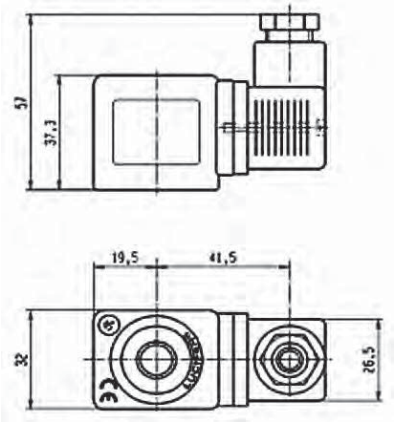

ELECTRICAL PARTS "nAc nCc"

ELECTRICAL PART 32 mm

This coil can be mounted with every Parker ATEX solenoid valves corresponding to the specified Coil Group.
See column "Coil Group" within valve pages.

Application: Control of solenoid valves in dangerous areas where explosion-proof protection Ex nAc nCc IIC T3/T4 is required.
Ease of mounting in confined space - offers shock and corrosion protection-simplifies conversion of existing equipment to other requirements, etc.

Benefits:
The synthetic material encapsulation of the coil provides an effective compact housing, offering full protection against dust, oil, water, etc.
Small size for ease of mounting in confined spaces.

Specification			32 mm Coil "nAc nCc"			
Reference			495875			
Certificate			LCIE 05 ATEX 6003 X			
Coil Group			3.0			
Type of protection		Gas	II 3 G Ex nAc nCc IIC T3/T4			
		Dust	II 3 D - Ex tc IIIC - T195°C / T130°C			
Degree of protection			**IP65** (with plug) according to IEC/EN 60529 Standards			
Insulation Class			F 155°C			
Duty cycle			100%			
Ambiant temperature			-40°C to +65°C / 50°C The application is limited also by the temperature range of the valve.			
Elect. Power	DC	**Pn** (hot)	7 W			
		P (cold) 20°C	-			
	AC	**Pn** (holding)	6 W			
		Attraction cold	-			
Weight			180 g			
Voltages "Un"			VAC/Hz	Code	VDC	Code
-10% to +10% of the Un			220-230/50	3D	24	C2

To Order a Coil choose Coil Ref + Voltage Code, example: **495875** for **24 VDC** = **495875C2**

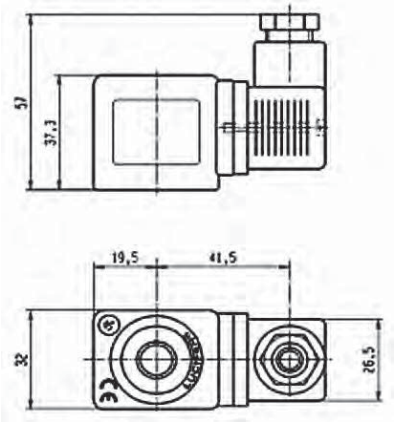

COIL GROUP
2.0/2.2

NON ENCAPSULATED ELECTRICAL PARTS "nAc nCc"

ELECTRICAL PART 32 mm

This coil can be mounted with every Parker ATEX solenoid valves corresponding to the specified Coil Group.
See column "Coil Group" within valve pages.

Application: Control of solenoid valves in dangerous areas where explosion-proof protection Ex nAc nCc IIC T3 is required.
Ease of mounting in confined space - offers shock and corrosion protection - simplifies conversion of existing equipment to other requirements, etc.

Benefits:
The synthetic material encapsulation of the coil provides an effective compact housing, offering full protection against dust, oil, water, etc.
Small size for ease of mounting in confined spaces.

Specification			32 mm Coil "nAc nCc"			
Reference			495880			
Certificate			LCIE 05 ATEX 6003X			
Coil Group			2.0 / 2.2			
Type of protection		Gas	II 3 G Ex nAc nCc IIC T3			
		Dust	II 3 D - Ex tc IIIC - T195°C			
Degree of protection			**IP65** (with plug) according to IEC/EN 60529 Standards			
Insulation Class			H 180°C			
Duty cycle			100%			
Ambiant temperature			-40°C to +65°C The application is limited also by the temperature range of the valve.			
Elect. Power	DC	**Pn** (hot)	14 W			
		P (cold) 20°C	-			
	AC	**Pn** (holding)	14 W			
		Attraction cold	-			
Weight			180 g			
Voltages "Un"			VAC/Hz	Code	VDC	Code
-10% to +10% of the Un			24/50 110/50 230/50	A2 A5 F4	24	C2

To Order a Coil choose Coil Ref + Voltage Code, example: **495880** for **24 VDC** = **495880C2**

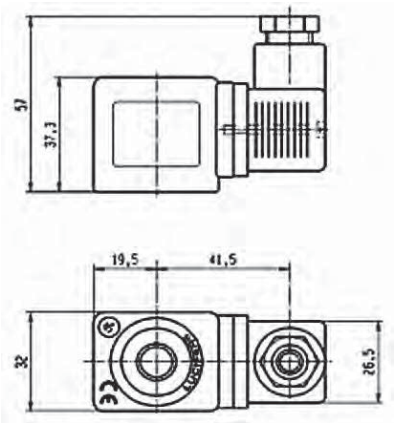

495915 - ELECTRICAL PARTS 50 mm

This coil can be mounted with every Parker ATEX solenoid valves corresponding to the specified Coil Group.
See column "Coil Group" within valve pages.

Application: Control of solenoid valves in dangerous areas where explosion-proof protection - Ex nAc nCc IIC T3 is required.

Benefits: Rotatable housing 360°, epoxy vernished steel with internal and external screw terminals for earth connection.

Small size for ease of mounting in confined space. Simplifies conversion of existing equipment to hazardous area requirements.

Reference			495915			
Certificate			LCIE 05 ATEX 6010 X			
Coil group			4.0			
Type of protection		Gas	II 3 G Ex nAc nCc IIC T3			
		Dust	II 3 D - Ex tc IIIC - T 195°C			
Degree of protection			**IP67** according to IEC/EN 60529 Standards			
Ambient temperature			-40°C to +65°C The application is limited also by the temperature range of the valve.			
Insulation Class			F 155°C			
Electrical connection			By special cable gland M20 x 1.5 on screw terminals for wires up to 1.5 mm². Cable with outside diameter 6.5 mm to 13.5 mm can be simply sealed using the rubber gland with resilient sealing rings supplied			
Consomation Electrique	AC	Attraction (hot)	11 W	-		
		Attraction (cold) 20°C	17 W	-		
		Release (hot)	4 W	-		
		Release (cold) 20°C	7 W	-		
	DC	Attraction (hot)	-	13 W		
		Attraction (cold) 20°C	-	19 W		
		Release (hot)	-	8 W		
		Release (cold) 20°C	-	10 W		
Weight			320 g			
Duty cycle			Continuous duty solenoid (ED 100%)			
Voltages "Un"			VAC/Hz	Code	VDC	Code
-10% to +10% of the Un			110-115/50-60	1P	24	C2
			220-230/50-60	3P	48	C4
			48/50-60	S4		
			24/50-60	P0		

To Order a Coil choose Coil Ref + Voltage Code,
example: **495915** for **24 VDC** = **495915C2**

Schema

As soon as an electrical impulse is given to the terminals A-B, the electromagnetical force attracts the plunger and simultneously magnetizes a reversible permanent magnet ring. This magnet retains the plunger in place. It stays in position even without current. Only an electrical impulse given to terminals A-C reserves the magnetic field. This magnetic field demagnetises the reversible magnet enough to allow the return spring to bring the plunger back to its initial position and close the valve.

Switch: Switch on (terminals A-B): Minimum 50 ms (maximum 1 s)
AC: Switch off (terminals A-C): Minimum 35 ms (maximum 1 s)

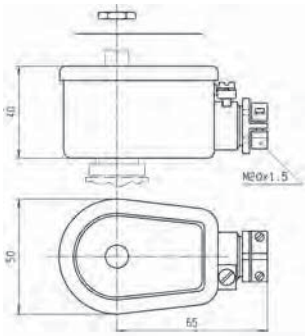

COIL GROUP
2.0/2.2

INCREASED SAFETY ELECTRICAL PARTS "nAc nCc"

3.5.1 ELECTRICAL PARTS 496155

These coils can be mounted with every Parker solenoid valves corresponding to the specified Coil Group.
See column "Coil Compatibility Group" within valve pages.

Application: Control of solenoid valves in dangerous areas where explosion-proof protection Ex nAc nCc IIC T3 is required.

Benefits: Rotatable housing 360°, epoxy vernished steel with internal and external screw terminals for earth connection.

Small size for ease of mounting in confined space.Simplifies conversion of existing equipment to hazardous area requirements.

Reference			496155			
Certificate			LCIE 05 ATEX 6010 X			
Coil Group			2.0/2.2			
Type of protection		Gas	II 3 G Ex nAc nCc IIC T3			
		Dust	II 3 G D - Ex tc IIIC - T 195 °C			
Degree of protection			**IP67** according to IEC/EN 60529 Standards			
Ambiant temperature			-40°C to +65°C The application is limited also by the temperature range of the valve.			
Insulation Class			F 155°C			
Electrical connection			By special cable gland or M20x1.5 on screw terminals for wires up to 1.5 mm². Cables with outside diameter 6.5 mm to 13.5 mm can be simply sealed using the rubber gland with resilient sealing rings supplied.			
Elect. Power	DC	**Pn** (hot)	14 W			
		P (cold) 20°C	21 W			
	AC	**Pn** (holding)	14 W			
		Attraction cold	56 VA (20 W)			
Weight			320 g			
Voltages "Un"			VAC/Hz	Code	VDC	Code
-10% to +10% of the Un			24/50 110/50 230/50	A2 A5 F4	24 48	C2 C4

To Order a Coil choose Coil Ref + Voltage Code, example: **496155** for **24VAC/50Hz** = **496155A2**

Fuses:

Both electrical parts have to be connected in series with a safety fuse according to IEC 60127-3.

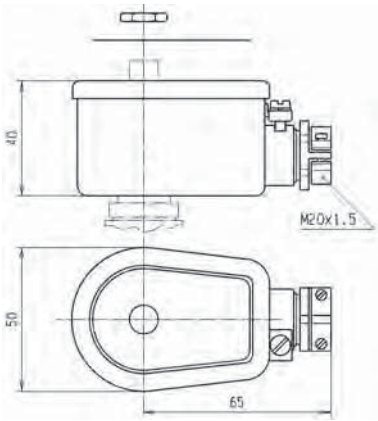

483270 & 483270.02 - ELECTRICAL PARTS 50 mm

These coils can be mounted with every Parker ATEX solenoid valves corresponding to the specified Coil Group.
See column "Coil Group" within valve pages.

Application: Control of solenoid valves in dangerous areas where explosion-proof protection Ex db IIC T4 to T6 is required.

Benefits: Rotatable 360°, housing made of cast iron with internal connection chamber: Cover made of aluminium alloy fixed with 4 screws. The electromagnetic control pilot is composed of three main elements: housing, coil and plunger tube including housing plate.

Small size for ease of mounting in confined space.

Reference			483270 (M20 x 1.5) 483270.02 (1/2 NPT)			
Certificate			LCIE 02 ATEX 6008 X			
Coil group			11.0			
Type of protection		Gas	II 2 G - Ex db IIC T4/T5/T6			
		Dust	II 2 D - Ex tb IIIC - T130°C/ 95°C/ 80°C			
Degree of protection			**IP66** with appropriate cable gland according to IEC/EN 60529 Standards			
Ambient temperature			-40 to +80°C / +75°C / +60°C The application is limited also by the temperature range of the valve.			
Class of insulation			F (155 °)			
Electrical connection			The electrical connection is made within the housing connection chamber on an accessible screw terminal. The cable entry to the connecting chamber is made through 1/2" NPT thread suitable for fitting an approved Ex db IIC cable gland.			
Elect. Power	DC	Pn (hot)	8 W			
		P (cold) 20°C	9 W			
	AC	Pn (holding)	8 W			
		Attraction cold	9 W			
Weight			1100 g (with coil)			
Voltages "Un"			VAC/Hz	Code	VDC	Code
-10% to +10% of the Un			110-115/50-60	1P	24	C2
			220-230/50-60	3P	48	C4
					110	C5

To Order a Coil choose Coil Ref + Voltage Code, example: **483270** for **24 VDC** = **483270C2**

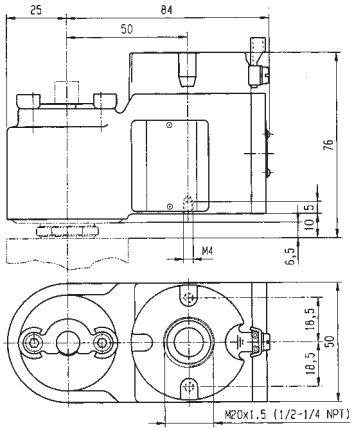

Plunger tube:

The plunger tube is welded to the stainless steel plate and is thus integrated to the housing which is screwed on the valve body.
This electrical part is supplied only as complete unit mounted on a valve, as the "Ex db" protection depends on minimum gap between plunger tube, plate and housing.

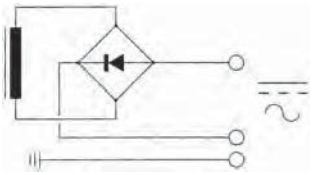

COIL GROUP
10.3

FLAMEPROOF
ELECTRICAL PARTS
"db"

497105 & 497105.02 - ELECTRICAL PARTS

These coils can be mounted with every Parker ATEX solenoid valves corresponding to the specified Coil Group.
See column "Coil Group" within valve pages.

Application: Control of solenoid valves in dangerous areas where explosion-proof protection Ex db IIC T4 / T5 / T6 is required.

Benefits: Rotatable 360°, stainless steel with internal and external screw terminals for earth connection.

Small size for ease of mounting in confined space. Simplifies conversion of existing equipement to hazardous area requirements.

Reference			497105 (M20x1.5) 497105.02 (NPT 1/2")			
Certificate			INERIS 12ATEX0041X - IECEx INE 12.0034X			
Coil Group			10.3			
Type of protection	Gas		II 2 G - Ex db IIC T4 / T5 / T6			
	Dust		II 2 D - Ex tb IIIC - 130°C / 95°C / 80°C			
Degree of protection			**IP66** (with relevant cable gland) according to IEC/EN 60529 Standards			
Ambient temperature			-50°C to +80°C / +60°C / +40°C The operating temperature of the valve/coil can be limited by that of the valve			
Insulation Class			F 155°C			
Electrical connection			Electric connection is done in the connection chamber on an easily accessible connector terminals. The cable entry to the connection chamber is made through a 1/2" NPT or M20x1.5 thread in which an approved Exdb IIC cable gland must be installed.			
Electrical consumption	DC	**Pn** (hot)	8 W			
		P (cold) 20°C	9 W			
	AC	**Pn** (holding)	8 W			
		Attraction cold	9 W			
Voltage Tolerance			+/- 10% of nominal voltage			
Emergising Cuty			ED 100%			
Voltages			VAC/Hz	Code	VDC	Code
			24/50-60 110-115 / 50-60 220-230 / 50-60	P0 1P 3P	12 24 48 110	C1 C2 C4 C5

To Order a Coil choose Coil Ref + Voltage Code, example: **497105** for **24 VDC** = **497105C2**

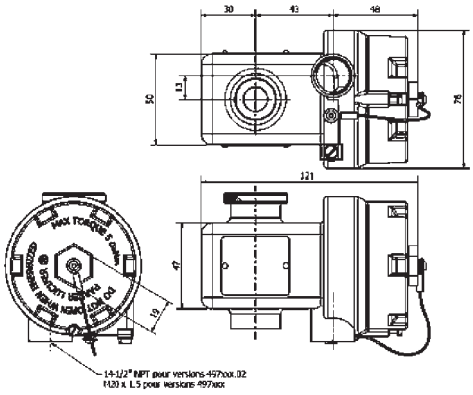

ELECTRICAL PART LOW POWER 22 mm

These coils can be mounted with every Parker ATEX solenoid valves corresponding to the specified Coil Group.
See column "Coil Group" within valve pages.

Application:
Control of solenoid valves in dangerous areas where explosion-proof protection Ex mb IIC T4 / T5 is required.

Benefits:
Coil and magnetic circuit encapsulated in synthetic material - offering shock and corrosion protection. AC coils with integrated thermal fuse. Small size for ease of mounting in confined spaces.

Reference			482605		482606 or 482606.160*			
Certificate			LCIE 02 ATEX 6014 X - IECEx LCI 07.0026 X					
Coil Group			1.1					
Type of protection	Gas		II 2 G - Ex mb IIC T4 / T5					
	Dust		II 2 D - Ex tb IIIC - T130°C / 95°C					
Degree of protection			**IP65** (with plug) according to IEC/EN 60529 Standards					
Ambiant temperature			-40°C to +65°C / +40°C The application is limited also by the temperature range of the valve.		-40°C to +65°C / +35°C			
Insulation Class			F 155°C					
Electrical connection			Cable connection (3 x 0.75 mm²) encapsulated with coil, cable material according to application					
Elect. Power	DC	**Pn** (hot)	5 W		2.5 W			
		P (cold) 20°C	6.5 W		3 W			
	AC	**Pn** (holding)	4 W		2 W			
		Attraction cold	8.9 VA (5 W)		5.7 VA (2.5 W)			
Weight			150 g					
Voltages "Un"			VDC	Code	VAC/Hz	Code	VDC	Code
-10% to +10% of the Un			12 24	C1 C2	24/50 48/50 110/50-115/50 220/50-230/50	A2 A4 0A 3D	24 48 110	C2 C4 C5

To Order a Coil choose Coil Ref + Voltage Code, example: **482605** for **24 VDC** = **482605C2**

* 482606.160 - 6 m cable length - available only in C2 and 3D
* 482606 - 1.5 m cable length

Fuses:
Both electrical parts 482605 & 482606 have to be connected in series with a safety fuse according to CEI 60127-3. Indicating example bellow:

482605:

DC: 12 V, 1000 mA - 24 V, 500 mA - 48 V, 200 mA - 110 V, 100 mA
AC 50 HZ: 24 V, 500 mA - 48 V, 250 mA - 110/115 V, 100 mA - 220/230 V, 3 mA
AC 60 Hz: 24 V, 630 mA - 110/115 V, 125 mA - 220/230 V, 63 mA

482606:

DC: 12 V, 400 mA - 24 V, 200 mA - 48 V, 100 mA - 110 V, 50 mA
AC 50 HZ: 24 V, 250 mA - 48 V, 125 mA - 110/115 V, 63 mA - 220/230 V, 32 mA
AC 60 Hz: 24 V, 315 mA - 110/115 V, 63 mA - 220/230 V, 32 mA

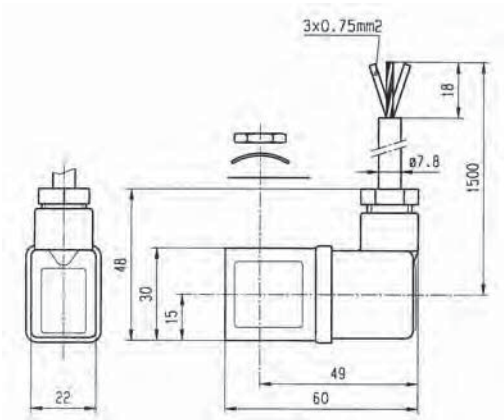

COIL GROUP
2.0/2.1

ENCAPSULATED
ELECTRICAL PARTS
"mb"

ELECTRICAL PART 32 mm

This coil can be mounted with every Parker ATEX solenoid valves corresponding to the specified Coil Group.
See column "Coil Group" within valve pages.

Application: Control of solenoid valves in dangerous areas where explosion-proof protection Ex mb IIC T4 is required.

Benefits: Coil and magnetic circuit encapsulated in synthetic material offering shock and corrosion protection. AC/DC coils with integrated thermal fuse. DC coils with integrated surge suppression diode.

Small size for ease of mounting in confined spaces. This electrical

Reference			492670*			
Certificate			LCIE 02 ATEX 6015 X			
Coil Group			2.0 / 2.1			
Type of protection		Gas	II 2 G - Ex mb IIC T4			
		Dust	II 2 D - Ex tb IIIC - T130°C			
Degree of protection			**IP65** (With DIN Plug connector) according to IEC/EN 60529 standards			
Ambiant temperature			-40°C to +40°C The application is limited also by the temperature range of the valve.			
Class of insulation			F 155°C			
Electrical connection			Cable connection (3 x 1.5 mm²) encapsulated with coil, cable material according to application			
Elect. Power	DC	**Pn** (hot)	9 W			
		P (cold) 20°C	12 W			
	AC	**Pn** (holding)	8 W			
		Attraction cold	26 VA (9 W)			
Weight			320 g			
Voltages "Un"			VAC/Hz	Code	VDC	Code
-10% to +10% of the Un			48/50	A4	24	C2
			230/50	F4	48	C4
					110	C5

To Order a Coil choose Coil Ref + Voltage Code, example: **492670** for **24 VDC** = **492670C2**

* 492670 3 m cable length

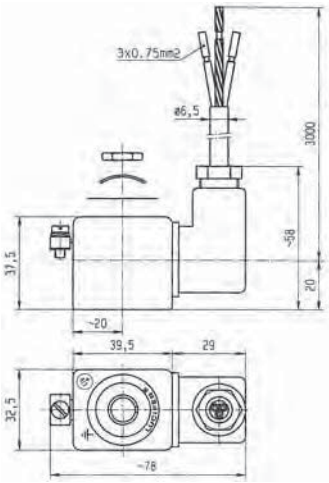

Special conditions:

The supply connection lines have to be fixed and positioned in such a way that they are protected against mechanical damages.

It is necessary to use a safety fuse with a nominal current corresponding to the coil current (max. 3 x nominal according to IEC 60127 and IEC 60269) against short-circuits.

Recommended values:

DC: 12 V, 1250 mA - 24 V, 630 mA - 48 V, 315 mA - 110 V, 125 mA
AC 50 HZ: 24 V, 1000 mA - 48 V, 500 mA - 110 V, 250 mA - 230 V, 100 mA
AC 60 Hz: 240 V, 100 mA

COIL GROUP

2.0/2.1

ENCAPSULATED ELECTRICAL PARTS "mb"

WITH WATER PROOF METAL HOUSING 50 mm

These coils can be mounted with every Parker ATEX solenoid valves corresponding to the specified Coil Group.
See column "Coil Group" within valve pages.

Application: Control of solenoid valves in dangerous areas where explosion-proof protection Ex mb IIC T4/ T5 is required.

Benefits: Epoxy-vernished steel housing - solenoid coil, rectifier (silicium diodes), fuse and varistor protection element are completely encapsulated in the coil housing by means of epoxy resin.

Small size for ease of mounting in confined space. Simplifies conversion of existing equipment to hazardous area requirements.

Reference			492070 (with 3 m cable length) 492070.160 (with 6 m cable length)			
Certificate			LCIE 02 ATEX 6017 X - IECEx LCI 09.0024 X			
Coil Group			2.0 / 2.1			
Type of protection		Gas	II 2 G - Ex mb IIC T4/ T5			
		Dust	II 2 D - Ex tb IIIC - T130 / 95°C			
Degree of protection			**IP67** according to IEC/EN 60529 standards			
Ambient temperature			-40°C to +65°C / 40°C The application is limited also by the temperature range of the valve.			
Insulation Class			F 155°C			
Electrical connection			Cable connection (3 x 1.5 mm²) with cable gland M20 x 1.5, external earth screw connection.			
Elect. Power	DC	**Pn** (hot)	8 W			
		P (cold) 20°C	10 W			
	AC	**Pn** (holding)	9 W			
		Attraction cold	11 W			
Weight			500 g			
Voltages "Un"			VAC/Hz	Code	VDC	Code
-10% to +10% of the Un			24/50-60	P0	24	C2
			110/50-60	P2	48	C4
			220/50-60	R5	110	C5
			230/50-60	P9		
			240/50-60	Q1		

To Order a Coil choose Coil Ref + Voltage Code, example: **492070** for **24 VDC** = **492070C2**

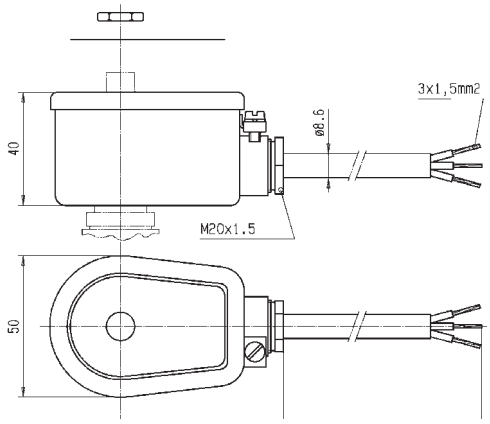

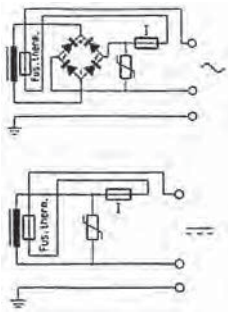

COIL GROUP
2.0/2.1

ENCAPSULATED
ELECTRICAL PARTS
"mb"

HZ10 COIL DOUBLE FREQUENCY

This coil can be mounted with every Parker ATEX solenoid valves corresponding to the specified Coil Group.
See column "Coil Group" within valve pages.

Application: Control of solenoid valves in dangerous areas where explosion-proof protection Ex mb IIC T3/T4/T5 is required.

The coil is delivered with a 3m cable.

Specification			Double Frequency			
Reference			HZ10			
Certificate			LCIE 02 ATEX 6020 X - IECEx LCI 08.0027 X			
Coil Group			2.0 / 2.1			
Type of protection	Gas		II 2 G - Ex mb IIC T3/T4/T5			
	Dust		II 2 D - Ex tb IIIC T195°C / 130°C / 95°C			
Degree of protection			**IP65** (with plug) according to IEC/EN 60529 Standards			
Ambient temperature			-40°C to +80°C / 65°C / 40°C The application is limited also by the temperature range of the valve.			
Insulation Class			H 180°C			
Duty cycle			100% continuous			
Electrical connection			Cable connection (3 x 1.5 mm²) with cable gland M20 x 1.5, external earth screw connection.			
Elect. Power	DC	**Pn** (hot)	8 W			
		P (cold) 20°C	-			
	AC	**Pn** (holding)	8 W			
		Attraction cold	-			
Weight			299 g			
Voltages "Un"			VAC/Hz	Code	VDC	Code
-10% to +10% of the Un			24/60	B2	12	C1
			110/50-120/60	P3	24	C2
			220/50-240/60	Q3	120	C6

To Order a Coil choose Coil Ref + Voltage Code, example: **HZ10** for **24 VDC** = **HZ10C2**

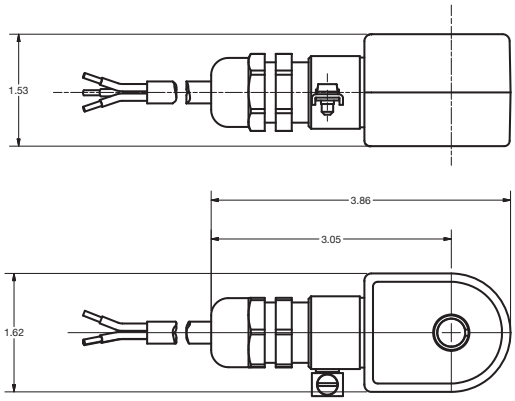

Dimensions in Inches.

HZ11 COIL DOUBLE FREQUENCY

This coil can be mounted with every Parker ATEX solenoid valves corresponding to the specified Coil Group.

See column "Coil Group" within valve pages.

Application: Control of solenoid valves in dangerous areas where explosion-proof protection Ex mb IIC T3/T4/T5 is required.

The coil is delivered with a 3m cable.

Specification			Double Frequency			
Reference			HZ11			
Certificate			LCIE 02 ATEX 6020 X - IECEx LCI 08.0027 X			
Coil Group			2.0 / 2.2			
Type of protection		Gas	II 2 G - Ex mb IIC T3/T4/T5			
		Dust	II 2 D - Ex tb IIIC T195°C / 130°C / 95°C			
Degree of protection			**IP65** (with plug) according to IEC/EN 60529 Standards			
Ambient temperature			-40°C to + 65°C / 40°C The application is limited also by the temperature range of the valve..			
Insulation Class			H 180 °C			
Duty cycle			100% continuous			
Elect. Power	DC	**Pn** (hot)	14 W			
		P (cold) 20°C	-			
	AC	**Pn** (holding)	14 W			
		Attraction cold	-			
Weight			299 g			
Voltages "Un"			VAC/Hz	Code	VDC	Code
-10% to +10% of the Un			24/60	B2	12	C1
			110/50-120/60	P3	24	C2
			220/50-240/60	Q3	120	C6

To Order a Coil: **Coil Ref** + **Voltage Code**, example: **HZ11** for **24 VDC** = **HZ11C2**

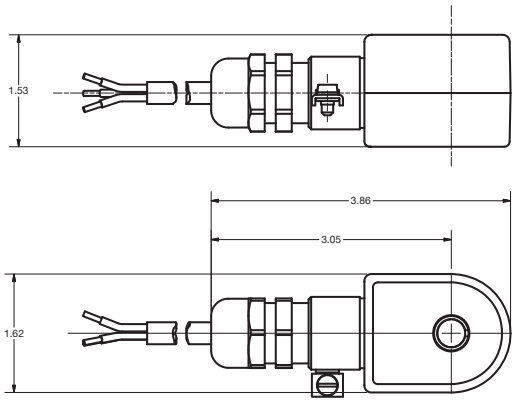

Dimensions in Inches.

COIL GROUPS

6.0

FLAME PROOF ENCAPSULATED
ELECTRICAL PARTS
"db mb"

495900 - LOW POWER ELECTRICAL PARTS 37 mm

This coil can be mounted with every Parker ATEX solenoid valves corresponding to the specified Coil Group.
See column "Coil Group" within valve pages.

Application: Control of solenoid valves in dangerous areas where explosion-proof protection Ex db mb IIC T4 to T6 is required.

Benefits: Rotatable 360° fibreglass-reinforced plastic housing (class H). Solenoid coil, rectifier (silicium diodes), fuses and varistor protection are completely encapsulated into the coil housing by epoxy resin for shock and corrosion protection.

The plastic housing is delivered with M20 x 1.5 cable gland certified for use "db" protection. Small size for ease of mounting in confined space.

Reference			495900 (VAC)		495900 (VDC)	
Certificate			LCIE 03 ATEX 6451 X - IECEx LCI 06.0004 X			
Coil Group			6.0			
Type of protection		Gas	II 2 G - Ex db mb IIC T4 / T5 / T6		II 2 G - Ex db mb IIC T4 / T5 / T6	
		Dust	II 2 D Ex tb IIIC - 130°C / 95°C / 80°C		II 2 D Ex tb IIIC - T130°C / 95°C / 80°C	
Degree of protection			**IP67** according to IEC/EN 60529 Standards			
Ambient temperature			-40°C to +80°C / 55°C / 40°C The application is limited also by the temperature range of the valve.		-40°C to +80°C / 65°C / 55°C	
Class of insulation			H (180 °)			
Electrical connection			Electric connection is done in the connection box on an easily accessible connector terminals. The introduction of the cable (Ø min 5 mm, Ømax. 11 mm, section max. 2.5 mm²) in the connection box passes by the built in M20 x 1.5 cable gland			
Elect. Power	DC	**Pn** (hot)	-		2 W	
		P (cold) 20°C	-		2.5 W	
	AC	**Pn** (holding)	2.5 W		-	
		Attraction cold	3 W		-	
Voltages "Un"			VAC/Hz	Code	VDC	Code
-10% to +10% of Un for AC - 10 % to + 10 % for Un DC.			24/50 48/50 115/50 230/50	A2 A4 E5 F4	24 48 110	C2 C4 C5

To Order a Coil: **Coil Ref** + **Voltage Code**, example: **495900** for **24 VDC** = **495900C2**

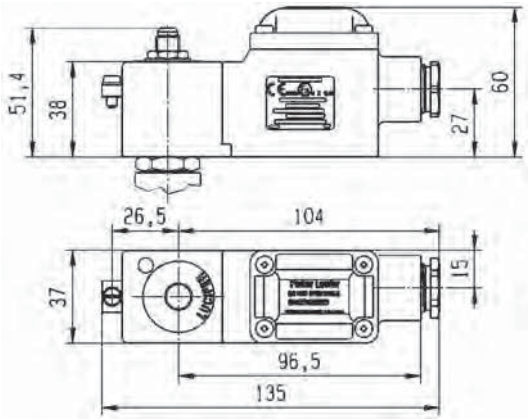

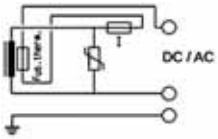

495905 - ELECTRICAL PARTS 37 mm

These coils can be mounted with every Parker ATEX solenoid valves corresponding to the specified Coil Group.
See column "Coil Group" within valve pages.

Application: Control of solenoid valves in dangerous areas where explosion-proof protection Ex db mb IIC T4 is required.

Benefits: Rotatable 360° fibreglass-reinforced plastic housing (class H). Solenoid coil, rectifier (silicium diodes), fuses and varistor protection are completely encapsulated into the coil housing by epoxy resin for shock and corrosion protection.

The plastic housing is delivered with M20 x 1.5 cable gland certified for use "db" protection. Small size for ease of mounting in confined space.

Reference			495905		495905.05*	
Certificate			LCIE 03 ATEX 6451 X - IECEx LCI 06.0004 X			
Coil Group			2.0 / 2.1			
Type of protection		Gas	II 2 G - Ex db mb IIC T4			
		Dust	II 2 D - Ex tb IIIC - 130°C			
Degree of protection			**IP67** according to IEC/EN 60529 Standards			
Ambient temperature			-40°C to +80°C The application is limited also by the temperature range of the valve.			
Class of insulation			H (180 °)			
Electrical connection			Electric connection is done in the connection box on an easily accessible connector terminals. The introduction of the cable (Ø min 5 mm, Ømax. 11 mm, section max. 2.5 mm²) in the connection box passes by the built in M20 x 1.5 cable gland.			
Elect. Power	DC	**Pn** (hot)	8 W			
		P (cold) 20°C	9 W			
	AC	**Pn** (holding)	8 W			
		Attraction cold	9 W			
Voltages "Un"			VAC/Hz	Code	VDC	Code
-10% to +10% of Un for AC -10% to +10% for Un DC			24/50 48/50 115/50 230/50	A2 A4 E5 F4	24 48 110	C2 C4 C5

To Order a Coil choose Coil Ref + Voltage Code, example: **495905** for **24 VDC** = **495905C2**

* 495905.05 available only in C4

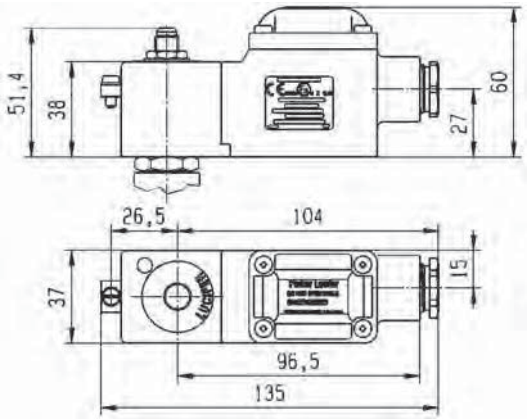

495905

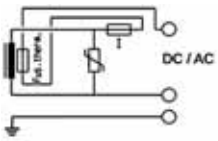

*495905.05

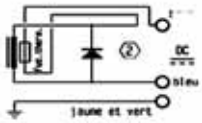

COIL GROUP
10.2/10.1

FLAME PROOF ENCAPSULATED ELECTRICAL PARTS "db mb"

496555 & 496560 - ELECTRICAL PARTS 37 mm

These coils can be mounted with every Parker ATEX solenoid valves corresponding to the specified Coil Group.
See column "Coil Group" within valve pages.

Application: Control of solenoid valves in dangerous areas where explosion-proof protection Ex db mb IIC T4 to T6 is required.

Benefits: Rotatable 360° fibreglass-reinforced plastic housing (class H). Solenoid coil, rectifier (silicium diodes), fuses and varistor protection are completely encapsulated into the coil housing by epoxy resin for shock and corrosion protection.

The plastic housing is delivered with M20 x 1.5 cable gland certified for use "db" protection. Small size for ease of mounting in confined space.

Reference			496555				496560			
Certificate			LCIE 07 ATEX 6075 X - IECEx LCI 07.0014X							
Coil Group			10.2				10.1			
Type of protection		Gas	II 2 G - Ex db mb IIC T4 / T5 / T6				II 2 G - Ex db mb IIC T4			
		Dust	II 2 D - Ex tb IIIC - T130°C / 95°C / 80°C				II 2 D - Ex tb IIIC - T130°C			
Degree of protection			**IP 67** according to IEC/EN 60529 Standards							
Ambiant temperature			-40°C to +65 / 50 / 35°C The application is limited also by the temperature range of the valve.				-40°C to +65°C			
Class of insulation			H (180 °)							
Electrical connection			Electric connection is done in the connection box on an easily accessible connector terminals. The introduction of the cable (Ø min 5 mm, Ømax. 11 mm, section max. 2.5 mm²) in the connection box passes by the built in M20 x 1.5 cable gland.							
Elect. Power	DC	**Pn** (hot)	-		6 W		-		8 W	
		P (cold) 20°C	-		7.5 W		-		10.5 W	
	AC	**Pn** (holding)	6 W		-		8 W		-	
		Attraction cold	7.5 W		-		10.5 W		-	
Voltages "Un"			VAC/Hz	Code	VDC	Code	VAC/Hz	Code	VDC	Code
-10% to +10% of the Un			230/50-60 110/50-60 24/50-60 48/50-60	P9 P2 P0 S4	24 48 110	C2 C4 C5	230/50-60 110/50-60 24/50-60 48/50-60	P9 P2 P0 S4	24 48 110	C2 C4 C5

To Order a Coil choose Coil Ref + Voltage Code, example: **496555** for **24 VDC** = **496555C2**

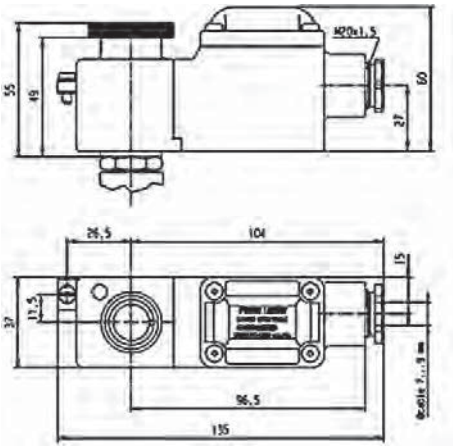

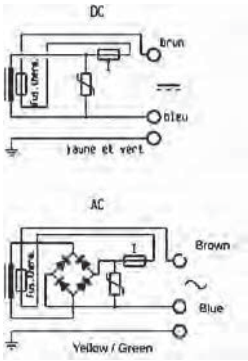

496700 & 496800 - ELECTRICAL PARTS 37 mm

These coils can be mounted with every Parker ATEX solenoid valves corresponding to the specified Coil Group.
See column "Coil Group" within valve pages.

Application: Control of solenoid valves in dangerous areas where explosion-proof protection Ex db mb IIC T4 to T6 is required.

Benefits: Rotatable 360° fibreglass-reinforced plastic housing (class H). Solenoid coil, rectifier (silicium diodes), fuses and varistor protection are completely encapsulated into the coil housing by epoxy resin for shock and corrosion protection.

The plastic housing is delivered with 1/2" NPT or M20 x 1.5 threaded hole for wide range of cable glands. Small size for ease of mounting in confined space.

Reference			496700 or 496700.02 (NPT)				496800 or 496800.02 (NPT)			
Certificate			LCIE 10 ATEX 3059 X - IECEx LCI 10.0023X							
Coil Group			10.2				10.1			
Type of protection		Gas	II 2 G - Ex db mb IIC T4 / T5 / T6				II 2 G - Ex db mb IIC T4			
		Dust	II 2 D - Ex tb IIIC - T130 / 95 / 80°C				II 2 D - Ex tb IIIC - T130°C			
Degree of protection			**IP67** according to IEC/EN 60529 Standards							
Ambiant temperature			-40°C to +35°C / +50°C / +65°C The application is limited also by the temperature range of the valve.				-40°C to +65°C			
Class of insulation			H (180°)							
Electrical connection			Electric connection is done in the connection box passes through a 1/2 NPT or M20x1.5 thread in which a certified Ex dBIIC cable gland must be installed							
Elect. Power	DC	Pn (hot)	-		6 W		-		8 W	
		P (cold) 20°C	-		7.5 W		-		10.5 W	
	AC	Pn (holding)	6 W		-		8 W		-	
		Attraction cold	7.5 W		-		10.5 W		-	
Voltages "Un"			VAC/Hz	Code	VDC	Code	VAC/Hz	Code	VDC	Code
-10% to +10% of the Un			230/50-60 110/50-60 24/50-60 48/50-60	P9 P2 P0 S4	24 48 110	C2 C4 C5	230/50-60 110/50-60 24/50-60 48/50-60	P9 P2 P0 S4	24 48 110	C2 C4 C5

To Order a Coil choose Coil Ref + Voltage Code, example: **496700** for **24 VDC** = **496700C2**

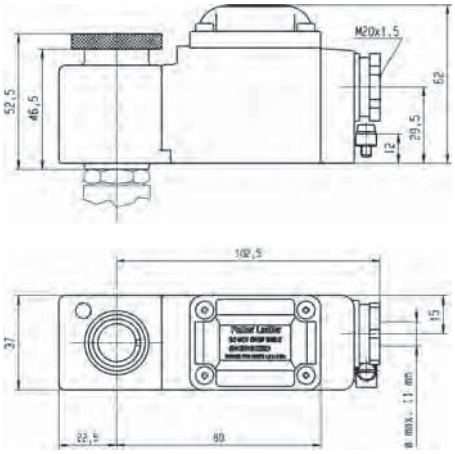

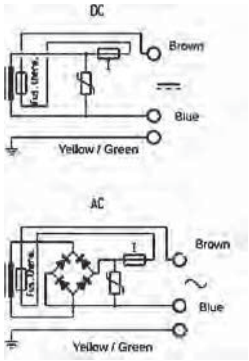

COIL GROUP

2.0/2.1

FLAME PROOF ENCAPSULATED ELECTRICAL PART "db mb"

493640 OR HZ09 - ELECTRICAL PARTS

This coil can be mounted with every Parker ATEX solenoid valves corresponding to the specified Coil Group.
See column "Coil Group" within valve pages.

Application: Control of solenoid valves in dangerous areas where explosion-proof protection Ex db mb IIC T4/T5 is required.

Benefits: Metal armature encapsulated in synthetic material provides high shock and corrosion protection.

Small size for ease of mounting in confined space.

Reference			493640 493640.60*			
Certificate			LCIE 02 ATEX 6009 X			
Coil Group			2.0 / 2.1			
Type of protection	Gas		II 2 G Ex db mb IIC T4/T5			
	Dust		II 2 D - Ex tb IIIC - T130°C / T95°C			
Degree of protection			**IP65** according to IEC/EN 60529 Standards			
Ambiant temperature			- 40°C to +100°C / +75°C The application is limited also by the temperature range of the valve.			
Class of insulation			F (155 °)			
Electrical connection			Special "Ex db" cable gland, galvanized steel, with EPDM sealing. (EPR) cable, outside diameter 7.3 ± 0.5 mm and 3000 mm long.			
Elect. Power	DC	**Pn** (hot)	8 W			
		P (cold) 20°C	9 W			
	AC	**Pn** (holding)	8 W			
		Attraction cold	32 VA (9 W)			
Weight			500 g			
Voltages "Un"			VAC/Hz	Code	VDC	Code
- 15% to +10% of the Un			110/50	A5	24	C2
			110-120/50-60	P3	48	C4
			220-240/50-60	Q3	120	C6

To Order a Coil choose Coil Ref + Voltage Code, example: **493640** for **24 VDC** = **493640C2**

* 493640.60 - 6 m cable length - Available only in C2

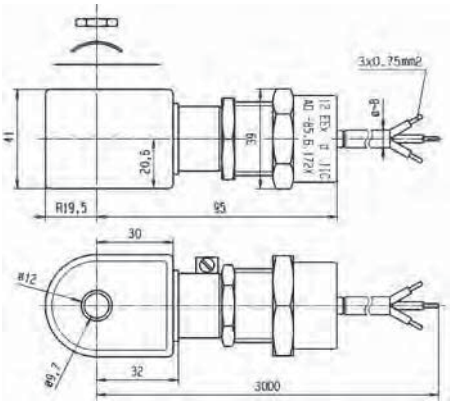

Fuses

This electrical part is equipped with a standard thermal cut-off fuse on all models and voltages

This electrical part must be connected in series with a safety fuse according to IEC 60127-3.

DC: 24V, 400 mA

AC: 110/50-120/60, 200 mA
220/50-240/60, 100 mA
230/50, 95 mA

483371 & 494040 - ELECTRICAL PARTS 50 MM

This coil can be mounted with every Parker ATEX solenoid valves corresponding to the specified Coil Group.
See column "Coil Group" within valve pages.

Application: Control of solenoid valves in dangerous areas where explosion-proof protection Ex eb IIC T3 orT4 is required.

Benefits: Rotatable housing 360°, epoxy vernished steel with internal and external screw terminals for earth connection.

Small size for ease of mounting in confined space.Simplifies conversion of existing equipment to hazardous area requirements.

Reference			483371				494040			
Certificate			LCIE 02 ATEX 6011 X				LCIE 02 ATEX 6013 X			
Coil Group			2.0 / 2.1							
Type of protection		Gas	II 2 G - Ex eb IIC T4				II 2 G - Ex eb IIC T3 / T4			
		Dust	II 2 D - Ex tb IIIC - T130°C				II 2 D - Ex tb IIIC - T195°C / T130 °C			
Degree of protection			**IP67** according to IEC/EN 60529 Standards							
Ambiant temperature			-40°C to +65°C The application is limited also by the temperature range of the valve.				-40°C to +90°C / to +65°C			
Class of insulation			F 155°C				H (180°)			
Electrical connection			By special cable gland or M20 x 1.5 "Ex eb" on screw terminals for wires up to 1.5 mm². Cables with outside diameter 6.5 mm to 13.5 mm can be simply sealed using the ru bber gland with resilient sealing rings supplied.							
Elect. Power	DC	**Pn** (hot)	8 W				8 W			
		P (cold) 20°C	9 W				9 W			
	AC	**Pn** (holding)	8 W				8 W			
		Attraction cold	32 VA (9 W)				32 VA (9 W)			
Weight			320 g							
Voltages "Un"			VAC/Hz	Code	VDC	Code	VAC/Hz	Code	VDC	Code
-10% to +10% of the Un			24/50 48/50 110-115/50 220-230/50	A2 A4 OA 3D	24 48 110	C2 C4 C5	220-230/50	3D	24	C2

To Order a Coil choose Coil Ref + Voltage Code, example: **483371** for **24 VDC** = **483371C2**

Fuses:
Both electrical parts have to be connected in series
with a safety fuse according to IEC 60127-3.

483371:

DC: 24 V, 400 mA - 48V, 250 mA - 110 V, 100 mA
AC 50HZ: 24 V, 630 mA - 48V, 315 mA - 110 V, 160 mA - 220/230 V, 80 mA

494040:

DC: 12 V, 400 mA - 24V, 200 mA - 48 V, 100 mA - 110V, 50 mA
AC 50HZ: 24 V, 250 mA - 48V, 125 mA - 110/115 V, 63 mA - 220/230 V, 32 mA

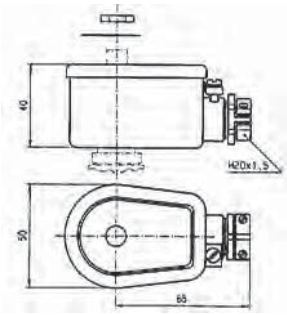

COIL GROUP
10.1

INCREASED SAFETY AND ENCAPSULATED ELECTRICAL PARTS "eb mb"

RoHS

492310 - ELECTRICAL PARTS 50 mm

This coil can be mounted with every Parker ATEX solenoid valves corresponding to the specified Coil Group.
See column "Coil Group" within valve pages.

Application: Control of solenoid valves in dangerous areas where explosion-proof protection Ex eb mb II T4 to T5 is required.

Benefits: Rotatable 360° fibreglass-reinforced plastic housing. Solenoid coil, rectifier (silicium diodes), fuses and varistor protection are completely encapsulated into the coil housing by epoxy resin for shock and corrosion protection.

Small size for ease of mounting in confined space.

Reference			492310			
Certificate			LCIE 02 ATEX 6023 X - IECEx LCI 06.0011 X			
Coil group			10.1			
Type of protection		Gas	II 2 G - Ex eb mb II T4 / T5			
		Dust	II 2 D - Ex tb IIIC - T130°C / T95°C			
Degree of protection			**IP66** according to IEC/EN 60529 Standards			
Ambiant temperature			-40°C to +75°C / to +40°C The operating temperature of the valve/coil can be limited by that of the valve			
Class of insulation			F 155°C			
Electrical connection			Connection box with terminals and cable entry via gland M20 x 1.5 - Possibility for additional earth via external screw.			
Elect. Power	DC	Pn (hot)	6 W			
		P (cold) 20°C	7.5 W			
	AC	Pn (holding)	6 W			
		Attraction cold	7.5 W			
Weight			500 g			
Voltages "Un"			VAC/Hz	Code	VDC	Code
-10% to +10% of the Un			24/50-60	P0	24	C2
			48/50-60	S4	48	C4
			230/50-60	P9	110	C5

To Order a Coil choose Coil Ref + Voltage Code, example: **492310** for **24 VDC** = **492310C2**

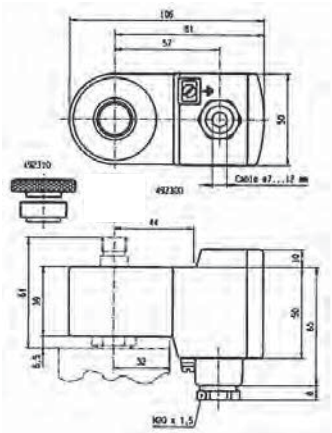

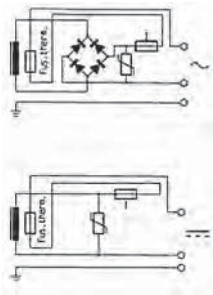

492210 - ELECTRICAL PARTS "BOOSTER" 50 mm

These coils can be mounted with every Parker ATEX solenoid valves corresponding to the specified Coil Group.
See column "Coil Group" within valve pages.

Application: Control of solenoid valves in dangerous areas where explosion-proof protection - Ex eb mb IIC T5/T6 is required.

Benefits: Rotatable 360° fibreglass-reinforced plastic housing. Solenoid coil, fuses and varistor protection are completely encapsulated into the coil housing by epoxy resin for shock and corrosion protection.Small size for ease of mounting in confined space. Simplifies conversion of existing equipment to hazardous area requirements.

Available only in 24 VDC (suffix code : C2)

Reference		492210
Certificate		LCIE 02 ATEX 6023 X - IECEx LCI 06.0011 X
Coil group		9.0
Type of protection	Gas	II 2 G - Ex eb mb IIC T5 / T6
	Dust	II 2 D - Ex tb IIIC - T95°C / T80°C
Degree of protection		**IP66** according to IEC/EN 60529 Standards
Ambient temperature		-40°C to +75°C / +40°C The operating temperature of the valve/coil can be limited by that of the valve
Insulation Class		F 155°C
Electrical connection		Connection box with terminals and cable entry via gland M20 x 1.5 Possibility for additional earth via external screw
Power consumption DC		1 to 1.8 W according to length of cable
Attraction current		I min = 60 mA (I nominal = 75 mA)
Voltage DC		U nominal = 24 VDC (C2), Umin = 21.6 VDC
Resistance		23 Ω + (R = 270 Ω)
Inductance		0 mH
Capacitance		0 µF
Response time		2 - 4 s
Weight		500 g

To Order a Coil choose Coil Ref + Voltage Code, example: **492210** for **24 VDC** = **492210C2**

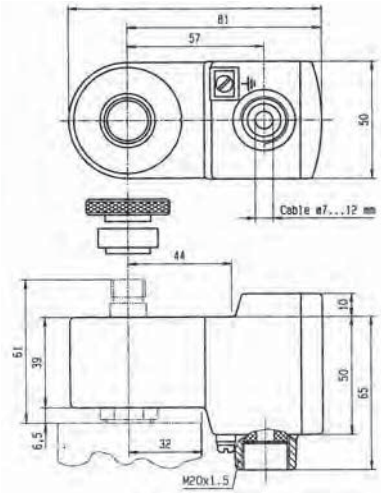

Indications:

Booster for Offshore valves

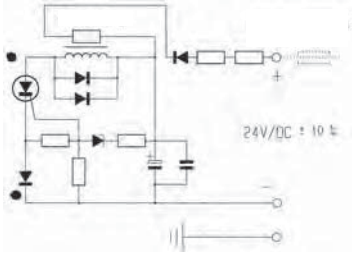

These electrical parts need an external fuse of I = 100 mA

COIL GROUP
2.0/2.1

INCREASED SAFETY
AND ENCAPSULATED
ELECTRICAL PARTS "**eb mb**"

492190 - ELECTRICAL PARTS 50 mm

This coil can be mounted with every Parker ATEX solenoid valves corresponding to the specified Coil Group.
See column "Coil Group" within valve pages.

Application: Control of solenoid valves in dangerous areas where explosion-proof protection Ex eb mb IIC T3 to T4 is required.

Benefits: Rotatable 360°, fiberglass -reinforced plastic housing. Solenoid coil, rectifier (silicium diodes), fuses and varistor protection are completely encapsulated into the coil housing by epoxy resin for shock and corrosion protection.

Small size for ease of mounting in confined space.

Reference			492190			
Certificate			LCIE 02 ATEX 6023 X - IECEx LCI 06.0011 X			
Coil Group			2.0 / 2.1			
Type of protection	Gas		II 2 G - Ex eb mb IIC T3 / T4			
	Dust		II 2 D - Ex tb IIIC - 195°C / 130°C			
Degree of protection			**IP66** according to IEC/EN 60529 Standards			
Ambient temperature			-40°C to +75°C / +40°C The operating temperature of the valve/coil can be limited by that of the valve			
Insulation Class			F 155°C			
Electrical connection			Connection box with terminals and cable entry via gland M20 x 1.5 Possibility for additional earth via external screw			
Electrical consumption	DC	**Pn** (hot)	9 W			
		P (cold) 20°C	11 W			
	AC	**Pn** (holding)	11 W			
		Attraction cold	13 W			
Weight			320 g			
Voltages "Un" -10% to +10% of the Un			VAC/Hz	Code	VDC	Code
			24/50-60	P0	24	C2
			110/50-60	P2	48	C4
			230/50-60	P9	110	C5

To Order a Coil choose Coil Ref + Voltage Code, example: **492190** for **24 VDC** = **492190C2**

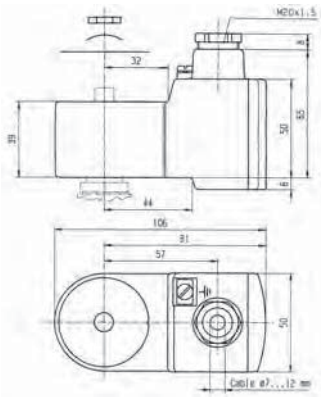

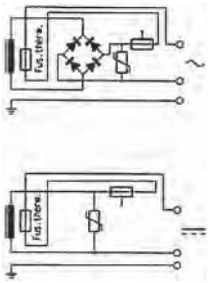

483580 - 483960 ELECTRICAL PARTS 32 mm "IS"

These coils can be mounted with every Parker ATEX solenoid valves corresponding to the specified Coil Group.

See column "Coil Group" within valve pages.

Application: Control of solenoid valves in dangerous areas where explosion-proof protection Ex ia IIC T6 is required.

Benefits: Fully encapsulated assembly comprising a coil, metal armature, three diodes circuit and DIN plug connection.

The encapsulation provides an effective compact housing offering full protection against dust, oil, water, etc.

Small size for ease of mounting in confined space. Available only in 28 VDC (suffix code : N7)

Reference (without plug) (with plug)			483580.01 483960.01
Certificate			LCIE 02 ATEX 6065 X - IECEx LCI 07.0025 X
Coil Group			7.0
Type of protection		Gas	II 1 G - Ex ia IIC - T6
		Dust	II 1 D - Ex ta IIIC - T80°C
Degree of protection			**IP65** with plug according to IEC/EN 60529 Standards
Ambiant temperature			- 40°C à + 55°C The operating temperature of the valve/coil can be limited by that of the valve.
Electrical connection			The coil is connected with a 2P + E plug according to EN 175301-803 type A Contact 1 is marked as the positive pole ⊕.
Maximum supply voltage			28 VDC (N7) - 110 mA The minimum operating voltage at maximum 60°C is 14 VDC.
Power	DC	Minimum	500 mW
		Maximum	3 W
			Depending on applied voltage, IS barrier type and resistance of connected cable
Coil resistance at 20°C Impedance Apparent inductance Apparent capacitance			340 Ω 340 Ω 0 mH 0 µF
Weight			160 g (with plug)

To Order a Coil choose Coil Ref + Voltage Code, example: **483580** for **28 VDC** = **483580N7**

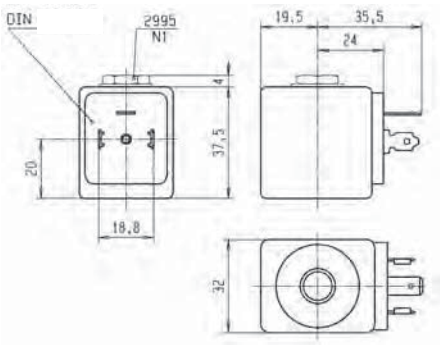

Important

The intrinsically safe supply circuit should have enough capacity in all environmental conditions to assure a **minimum operating current of 35 mA** through the coil.

The minimal holding current is 20 mA.

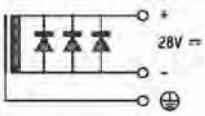

For the barrier compatibility see the corresponding table in in appendix section.

These coil must be used with suitable housing : **Ref. 2995**

COIL GROUP
8.0

INTRINSICALLY SAFE
ELECTRICAL PARTS
"ia"

495910 - MINIWATT - 0.3 W
ELECTRICAL PARTS "IS" "BOOSTER" 37 mm

These coils can be mounted with every Parker ATEX solenoid valves corresponding to the specified Coil Group.
See column "Coil Group" within valve pages.

Application: Control of solenoid valves in dangerous areas where explosion-proof protection Ex ia IIC T4 to T6 is required.

Benefits: Rotatable 360° fibreglass-reinforced plastic housing (class H). Solenoid coil, rectifier (silicium diodes), fuses and varistor protection are completely encapsulated into the coil housing by epoxy resin for shock and corrosion protection.

Small size for ease of mounting in confined space. Available only in 28 VDC (code: N7).

Reference			495910
Certificate			LCIE 03 ATEX 6464 X - IECEx LCI 07.0006 X
Coil Group			8.0
Type of protection	Gas		II 1 G - Ex ia IIC - T4 / T5 / T6
	Dust		II 1 D - Ex ta IIIC T80 / 95 / 130°C
Degree of protection			**IP67** according to IEC/EN 60529 Standards
Ambiant temperature			- 40°C to +80°C / 75°C / 65°C The application is limited also by the temperature range of the valve..
Class of insulation			H 180°C
Electrical connection			Electric connection is done in the connection box on an easily accessible connector terminals. The introduction of the cable (Ø min 7 mm, Ømax. 11 mm, section max. 2.5 mm²) in the connection box passes by the built in M20 x 1.5 cable gland
Maximum supply voltage			28 VDC (N7) - 110 mA
Power	DC	Minimum	0.3 W (with 13 VDC)
		Maximum	1.2 W (with 24 VDC)
			Depending on applied voltage, IS barrier type and resistance of connected cable
Line check			4 mA or 5 VDC max
Coil resistance at 20°C Impedance Apparent inductance Apparent capacitance			Charge ~ 550 Ω - Holding ~ 500 Ω 0 mH 0 µF
Response time			2 - 3 s
Weight			500 g

To Order a Coil choose Coil Ref + Voltage Code, example: **495910** for **28 VDC** = **495910N7**

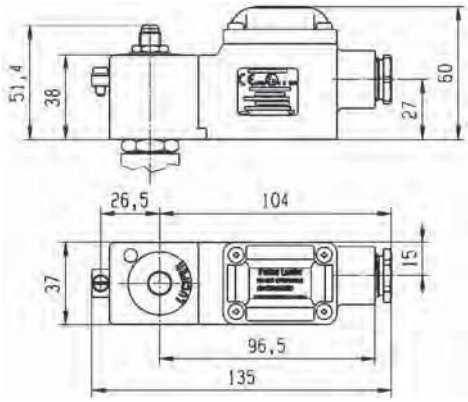

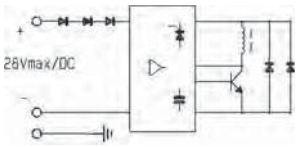

496565 ELECTRICAL PARTS "BOOSTER" "IS" 37 mm

This coil can be mounted with every Parker ATEX solenoid valves corresponding to the specified Coil Group.
See column "Coil Group" within valve pages.

Application: Control of solenoid valves in dangerous areas where explosion-proof protection Ex ia IIC T4 to T6 is required.

Benefits: Rotatable 360° fibreglass-reinforced plastic housing (class H). Solenoid coil, rectifier (silicium diodes), fuses and varistor protection are completely encapsulated into the coil housing by epoxy resin for shock and corrosion protection.

The plastic housing is delivered with M20 x 1.5 cable gland. Small size for ease of mounting in confined space. Available only in 28 VDC (code: N7).

Reference		496565	
Certificate		LCIE 08 ATEX 6071 X - IECEx LCI 08.0030 X	
Coil group		9.0	
Type of protection	Gas	II 1 G - Ex ia IIC - T4 / T5 / T6	
	Dust	II 1 D - Ex ta IIIC - T80 / T95 /T130°C	
Degree of protection		**IP67** according to IEC/EN 60529 Standards	
Ambiant temperature		- 40°C to +80 / 75 / 65°C The application might also be limited by the temperature range of the valve.	
Electrical connection		Cable connection through a plastic cable gland M20 x 1.5 allowing use of cable diameter from 7 to 12 mm. Additional earth connection possible with external screw terminal.	
Class of insulation		H180°C	
Minimum Courant of function		20 mA	
Minimum voltage of function at 60°C		28 VDC (N7)	
Safety parameters Maximum acceptable values: Ui (V) / Ii (mA) / Pi (W)		28 V / 110 mA / 0.77 W 27 V / 120 mA / 0.81 W 26 V / 135 mA / 0.88 W 25 V / 150 mA / 0.94 W 24 V / 170 mA/ 1.02 W	28 V / 280 mA / 1.96 W 27 V / 320 mA / 2.16 W 26 V / 350 mA / 2.27 W 25 V / 390 mA / 2.43 W 24 V / 430 mA/ 2.58 W
Line check		4 mA or 5 VDC max	
Apparent Impedance Typ. Apparent Inductance Apparent Capacitance		Attraction ~ 600 Ω - Holding ~ 570 Ω 0 mH 0 µF	
Response Time Typ.		2 - 4 s	
Weight		500 g	

To Order a Coil choose Coil Ref + Voltage Code,
example: **496565** for **28 VDC** = **496565N7**

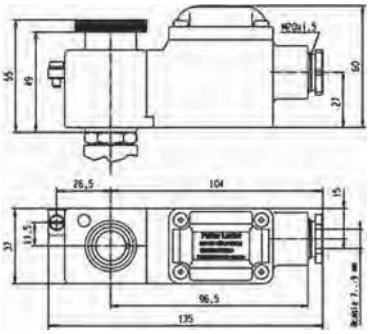

COIL GROUP
9.0

INTRINSICALLY SAFE
ELECTRICAL PARTS
"ia"

492965 ELECTRICAL PART "BOOSTER" "IS" 50 mm

This coil can be mounted with every Parker ATEX solenoid valves corresponding to the specified Coil Group.
See column "Coil Group" within valve pages.

Application: Control of solenoid valves in dangerous areas where explosion-proof protection Ex ia IIC - T6 is required.

Benefits: Rotatable 360° fibreglass-reinforced plastic housing. Solenoid coil, fuses and varistor protection are completely encapsulated into the coil housing by epoxy resin for shock and corrosion protection.Small size for ease of mounting in confined space. Simplifies conversion of existing equipment to hazardous area requirements.

Small size for ease of mounting in confined space. Available only in 28 VDC.

Reference			492965.01 - (Stainless steel fixation) 492965.02 - (Plastic fixation)
Certificate			LCIE 02 ATEX 6066 X - IECEx LCI 07.0007 X
Coil Group			9.0
Type of protection	Gas		II 1 G - Ex ia IIC - T6
	Dust		II 1 D - Ex ta IIIC - T80°C
Degree of protection			**IP66** according to IEC/EN 60529 Standards
Ambiant temperature			- 40°C to +65°C The application is limited also by the temperature range of the valve.
Electrical connection			Cable connection through a plastic or stainless steel cable gland M20 x 1.5 allowing use of cable diameter from 10 to 12 mm. Additional earth connection possible with external screw terminal.
Class of insulation			H180°C
Maximum supply voltage			28 VDC (N7) - 110 mA
Power	DC	Minimum	0.3 W (with 13 VDC)
		Maximum	2.3 W (with 24 VDC)
			Depending on applied voltage, IS barrier type and resistance of connected cable
Line check			4 mA or 5 VDC max
Coil resistance at 20°C Impedance Apparent inductance Apparent capacitance			85 Ω 275 Ω (with 13 VDC) - 260 Ω (with 24 VDC) 0 mH 0 µF
Response time			2 - 4 s
Weight			500 g

To Order a Coil choose Coil Ref + Voltage Code, example: **492965.01** for **28 VDC** = **492965.01N7**

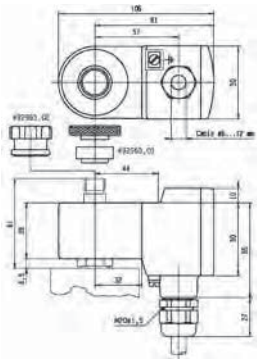

Important

The intrinsically safe supply circuit should have enough capacity in all environmental conditions to assure a **minimum operating current of 29 mA** through the coil.

The minimal holding current is 20 mA.

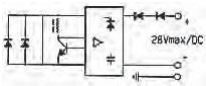

For the barrier compatibility see the corresponding table in appendix section.

482870.01 & 492335 "NEMA" ELECTRICAL PARTS "IS" 50 mm

These coils can be mounted with every Parker ATEX solenoid valves corresponding to the specified Coil Group.
See column "Coil Group" within valve pages.

Application: Control of solenoid valves in dangerous areas where an explosion-proof protection Ex ia IIC - T6 is required.

Benefits: Rotatable 360° housing, polyamid with fibreglass housing and cover. Coil, electronic circuits and other elements required for intrinsic safety are completely encapsulated in the housing with epoxy material for shock and corrosion protection.

Small size for ease of mounting in confined space.

Reference			482870.01	492335
Certificate			LCIE 02 ATEX 6024 X	LCIE - FM - CSA
Coil Group			12.0	
Type of protection	Gas		II 1 G - Ex ia IIC - T6	Cl. I, Div.I, Gr. A, B, C, D, Cl. II, Div.I, Gr. E, F, G
	Dust		II 1 D - Ex ta IIIC - T80°C	
Degree of protection			**IP66** according to IEC/EN 60529 Standards	NEMA 4 - 4X
Ambiant temperature			- 40°C to +65°C The application is limited also by the temperature range of the valve.	+60°C
Class of insulation			H180°C	
Electrical connection			Cable connection through a stainless steel cable gland M20 x 1.5 allowing use of cable diameter from 10 to 12 mm. Additional earth connection possible with external screw terminal.	
Maximum supply voltage			28 VDC (N7) - 110 mA	30 VDC (L8) - 100 mA
Power	DC	Minimum	300 mW	
		Maximum	3 W	
			Depending on applied voltage, IS barrier type and resistance of connected cable	
Coil resistance at 20°C Impedance Apparent inductance Apparent capacitance			295 Ω 345 Ω 0 mH 0 µF	
Weight			500 g	

To Order a Coil choose Coil Ref + Voltage Code, example: **492335** for **30VDC** = **492335L8**

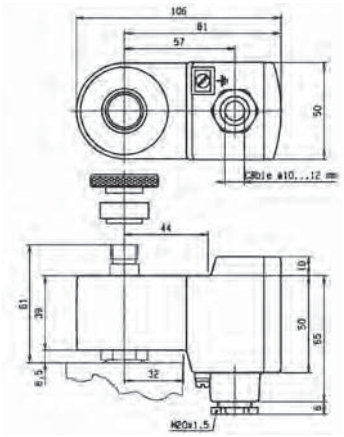

Important

The intrinsic safety supply circuit must have sufficient capacitance in all ambient conditions to guarantee a minimum operating current in excess of **29 mA** across the coil.

The minimum current for holding in the energised position is 20 mA

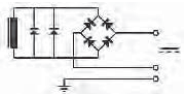

For the barrier compatibility see the corresponding table in appendix section.

COIL GROUP
7.0

INTRINSICALLY SAFE
ELECTRICAL PARTS
"ia"

488650.01 & 490885 "NEMA" ELECTRICAL PARTS "IS" 50 mm

This coil can be mounted with every Parker ATEX solenoid valves corresponding to the specified Coil Group.
See column "Coil Group" within valve pages.

Application: Control of solenoid valves in dangerous areas where explosion-proof protection Ex ia IIC - T6 is required.

Benefits: Rotatable 360° housing, polyamid with fibreglass housing and cover. Coil, electronic circuits and other elements required for intrinsic safety are completely encapsulated in the housing with epoxy material for shock and corrosion protection.

Small size for ease of mounting in confined space.

Reference			488650.01	490885
Certificate			LCIE 02 ATEX 6024 X	LCIE / FM / CSA
Coil Group			7.0	
Type of protection	Gas		II 1 G - Ex ia IIC - T6	Cl. I, Div.I, Gr. A, B, C, D, Cl. II, Div.I, Gr. E, F, G
	Dust		II 1 D - Ex ta IIIC - T80°C	
Degree of protection			**IP66** according to IEC/EN 60529 Standards	NEMA 4 - 4X
Ambiant temperature			- 40°C to +65°C The operating temperature of the valve/coil can be limited by that of the valve.	60°C
Electrical connection			Cable entry through a cable gland M20 x1.5. Screw terminals for leads 3 x 1.5 mm² max. Additional earth connection possible with external screw terminal	
Class of insulation			H180°C	
Maximum supply voltage			28 VDC (N7) - 110 mA	30 VDC(L8) - 100 mA
			The minimum operating voltage at maximum 60°C is 11.5 VDC.	
Power	DC	Minimum	300 mW	
		Maximum	3 W	
			Dependent on the applied voltage, type of barrier IS and the resistance of the connected cable	
Coil resistance at 20°C Impedance Apparent inductance Apparent capacitance			295 Ω 345 Ω 0 mH 0 µF	
Weight			500 g	

To Order a Coil choose Coil Ref + Voltage Code, example: **490885** for **30VDC** = **490885L8**

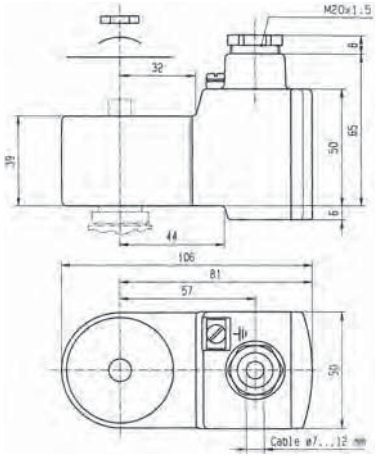

Important

The intrinsically safe supply circuit should have enough capacity in all environmental conditions to assure a **minimum operating current of 29 mA** through the coil.

The minimal holding current is 20 mA.

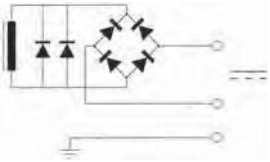

For the barrier compatibility see the corresponding table in appendix section.

488660.01 & 490890 " NEMA" ELECTRICAL PARTS "IS" 50 mm

These coils can be mounted with every Parker ATEX solenoid valves corresponding to the specified Coil Group.
See column "Coil Group" within valve pages.

Application: Control of solenoid valves in dangerous areas where explosion-proof protection Ex ia IIC T6 is required.

Benefits: Rotatable 360° housing, epoxy vernished steel housing and cover. Coil, electronic circuits and other elements required for intrinsic safety are completely encapsulated in the housing with epoxy material for shock and corrosion protection.

Small size for ease of mounting in confined space.

Reference			488660.01	490890
Certificate			LCIE 02 ATEX 6024 X	LCIE / FM / CSA
Coil Group			7.0	
Type of protection	Gas		II 1 G - Ex ia IIC - T6	Cl. I, Div.I, Gr. A, B, C, D Cl. II, Div.I, Gr. E, F, G
	Dust		II 1 D - Ex ta IIIC - T80°C	
Degree of protection			**IP67** according to IEC/EN 60529 Standards	NEMA 4 - 4X
Ambiant temperature			- 40°C to +65°C The operating temperature of the valve/coil can be limited by that of the valve	+60°C
Electrical connection			Cable connection (2 x 1 mm²) with cable gland M20 x1.5, external earth screw connection.	
Class of insulation			H180°C	
Maximum supply voltage			28 VDC - 110 mA (N7) The minimum operating voltage at maximum 60°C is 11.5 VDC.	30 VDC - 100 mA (L8)
Power	DC	Minimum	300 mW	
		Maximum	3 W	
			Dependent on the applied voltage, type of barrier IS and the resistance of the connected cable	
Coil resistance at 20°C Impedance Apparent inductance Apparent capacitance			295 Ω 345 Ω 0 mH 0 µF	
Weight			500 g	

To Order a Coil choose Coil Ref + Voltage Code, example: **490890** for **28 VDC** = **490890N7**

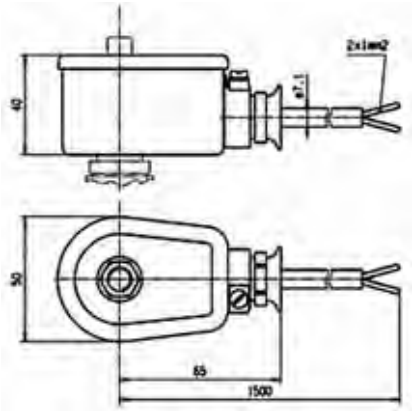

Important

The intrinsic safety supply circuit must have sufficient capacitance in all ambient conditions to guarantee a minimum operating current in excess of **29 mA** across the coil.

The minimum current for holding in the energised position is 20 mA.

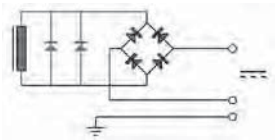

For the barrier compatibility see the corresponding table in appendix section.

COIL GROUP
7.0

INTRINSICALLY SAFE
ELECTRICAL PARTS
"ia"

488670.01 - ELECTRICAL PARTS "IS" 50 mm

This coil can be mounted with every Parker ATEX solenoid valves corresponding to the specified Coil Group.
See column "Coil Group" within valve pages.

Application: Control of solenoid valves in dangerous areas where explosion-proof protection Ex ia IIC - T6 is required.

Benefits: Rotatable 360° housing, epoxy vernished steel housing and cover. Coil, electronic circuits and other elements required for intrinsic safety are completely encapsulated in the housing with epoxy material for shock and corrosion protection.

Small size for ease of mounting in confined space.

Reference			488670.01
Certificate			LCIE 02 ATEX 6024 X
Coil group			7.0
Type of protection	Gas		II 1 G - Ex ia IIC - T6
	Dust		II 1 D - Ex ta IIIC - T80°C
Degree of protection			**IP65** according to IEC/EN 60529 Standards
Ambiant temperature			- 40°C to +65°C The operating temperature of the valve/coil can be limited by that of the valve
Electrical connection			Cable entry through a cable gland M20 x1.5. Screw terminals for leads 3 x 1.5 mm² max. Additional earth connection possible with external screw terminal.
Maximum supply voltage			28 VDC (N7) - 110 mA The minimum operating voltage at maximum 60°C is 11.5 VDC.
Power	DC	Minimum	300 mW
		Maximum	3 W
			Dependent on the applied voltage, type of barrier SI and the resistance of the connected cable
Coil resistance at 20°C Impedance Apparent inductance Apparent capacitance			295 Ω 345 Ω 0 mH 0 µF
Weight			500 g

To Order a Coil choose Coil Ref + Voltage Code, example: **488670.01** for **28 VDC** = **488670.01N7**

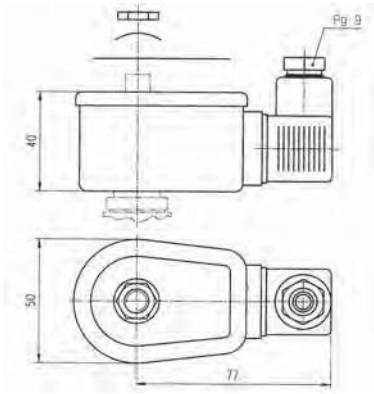

Important

The intrinsic safety supply circuit must have sufficient capacitance in all ambient conditions to guarantee a minimum operating current in excess of **29 mA** across the coil.

The minimum current for holding in the energised position is 20 mA.

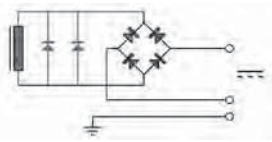

For the barrier compatibility see the corresponding table in appendix section.

TABLE OF CONTENT

INTRODUCTION

Index for Explosion Proof Electrical Parts 442
List of Coil Groups 443

COILS

Coils for DIN plug connection 446
Coils with flying leads 469
Coils with screw terminal 474
Coils with ISO-DIN connector 481

EXPLOSION PROOF ELECTRICAL PARTS

Level of protection "nAc nCc" 484
Level of protection "db" 492
Level of protection "mb" 494
Level of protection "db mb" 499
Level of protection "eb" 504
Level of protection "eb mb" 505
Level of protection "ia" 508

HOUSINGS 518

COIL ACCESSORIES 522

EXPLOSIVE ENVIRONMENTS 524

COIL APPENDICES

Guidance chart for IS-Barriers 534

HOUSING

4270

COIL STANDARD HOUSING WITH SCREW TERMINALS

Standard housing:

Reference:	4270
Material:	Epoxy vernished steel with cataphoresis traitement
Degree of protection:	**IP** according to IEC/EN 60529 **IP 10** with armoured conduit **IP 44** with cable gland
Electrical connection:	Can be made with armoured conduit or cable gland M12x1.5. Parts No. 495740 (cable gland M12x1.5) and 484093 to be ordered separately. Grounding connection by screw M3 on the inside of housing base plate.
Weight:	120 g

Benefits:

This metal housing offers the ideal protection against shocks and corrosion- rotatable 360° - easy mounting in confined spaces - single-nut mounting - light weight - simplifies conversion of existing equipment to other requirements.

Application:

The majority of the Lucifer® valves can be fitted with this standard housing, and can be mounted with several compatible Lucifer® coils group.

Compatible coils:

- **481000 - Standard Coil**
  8 W Class F (155°C)
- **483520 - Double-Frequency Coil**
  9 W Class F (155°C)
- **481044 - Standard High-Power Coil**
  14 W Class F (155°C)
- **485100 - Standard High-Temperature Coil**
  8 W Class H (180°C)
- **486265 - High-Temperature and High-Power Coil**
  14 W Class H (180°C

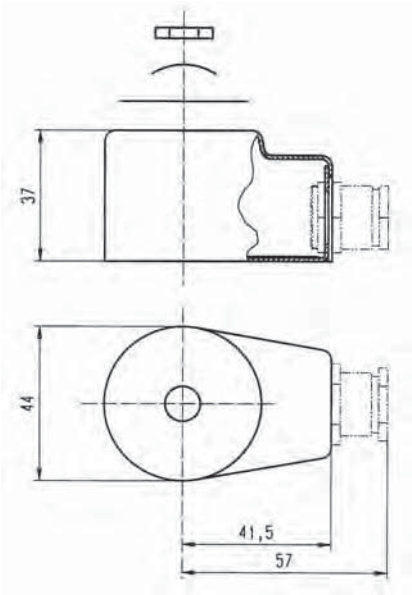

HOUSING

4269

HOUSING FOR BISTABLE (IMPULSE) COILS

Housing for bistable coil:

Reference:	4269
Material:	Epoxy vernished steel
Degree of protection:	**IP** according to IEC/EN 60529 **IP 10** with armoured conduit **IP 44** with cable gland
Electrical connection:	Can be made with armoured conduit or cable gland M12x1.5. Parts No. 484092 and 484093 to be ordered separately. Grounding connection by screw M3 on the inside of housing base plate.
Weight:	120 g

Benefits:

This metal housing offers the ideal protection against shocks and corrosion- rotatable 360° - easy mounting in confined spaces - single-nut mounting - light weight - simplifies conversion of existing equipment to other requirements.

Application:

This housing is specially designed for group 4.0 coils and can be mounted only with valves controlled by electrical impulses.

Compatible coils:

- **484990 - Impulse coil for AC**
  11 W Class F (155°C)
- **485400 - Impulse coil for DC**
  13 W Class F (155°C)

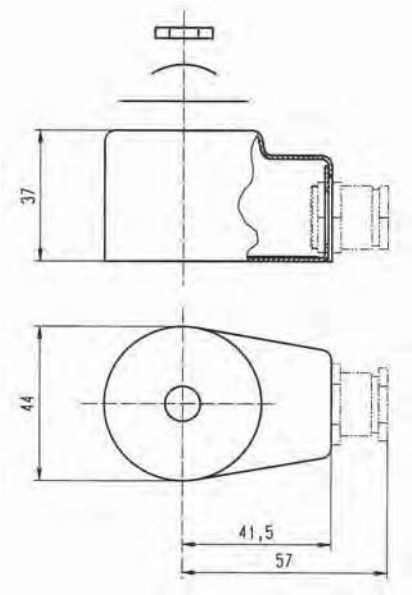

HOUSING

4538 WATERPROOF AND DUSTPROOF HOUSING

Waterproof housing:

Reference:	4538
Material:	Epoxy vernished steel
Degree of protection:	**IP** according to IEC/EN 60529 **IP 67** with cable gland
Electrical connection:	Cable connection by cable gland M20x1.5 according to DIN 46320. Cable with outer diameter 6.5 - 13.5 mm can be simply sealed using a rubber gland with resilient sealing rings. The enclosure is internally and externally fitted with grounding and earthing screw terminals.
Weight:	180 g

Benefits:

This enclosure is dust- and waterproof. It corresponds to the degree of "International Protection" IP 67 according to IEC / EN 60529. Corrosion resistant, the metal housing offers good protection for the coil against shocks and other outside influences - rotatable 360° - easy mounting in confined spaces - easy access to the screw terminals - single-nut mounting - light weight - simple conversion of existing electrical equipment to other requirements without interruption of fluid passage in the valve.

Application:

This housing can be equipped with several coils of our range, like the standard, double-frequency and magnetic latch coils.

Compatible coils:

- **481000 - Standard Coil**
  8 W Class F (155°C)
- **483520 - Double-Frequency Coil**
  9 W Class F (155°C)
- **484990 - Impulse Coil for AC**
  11 W Class F (155°C)
- **485400 - Impulse Coil for DC**
  13 W Class H (180°C)

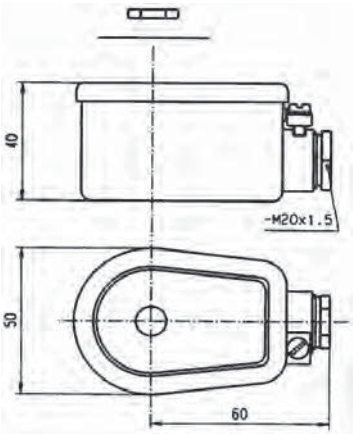

HOUSING

8520

WATERPROOF HOUSING FOR HIGH-TEMPERATURE COILS

Waterproof housing:

Reference:	8520
Material:	Epoxy vernished steel
Degree of protection:	**IP** according to IEC/EN 60529 **IP 67** with cable gland
Electrical connection:	Cable connection by cable gland M20x1.5 according to European standards. Cable with outer diameter 6.5 - 13.5 mm can be simply sealed using a rubber gland with resilient sealing rings. The enclosure is internally and externally fitted with grounding and earthing screw terminals.
Weight:	180 g

Benefits:

This enclosure is dust- and waterproof. It corresponds to the degree of "International Protection" IP 67 according to IEC / EN 60529. Corrosion resistant, the metal housing offers good protection for the coil against shocks and other outside influences - rotatable 360° - easy mounting in confined spaces - easy access to the screw terminals - single-nut mounting - light weight - simple conversion of existing electrical equipment to other requirements without interruption of fluid passage in the valve.

Application:

The majority of the Parker Lucifer® valves can be fitted with this housing and can be mounted with several compatible Parker Lucifer® coils for high temperature (14 W, 8 W Class F or H).

Compatible coils:

- **481044 - High Power Coil**
  14 W Class F (155°C)
- **486265 - High Power Coil**
  14 W Class H (180°C)
- **485100 - Coil for High Temperature**
  8 W Class H (180°C)

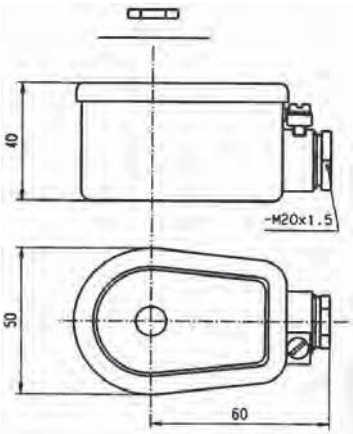

22 mm
32 mm

COIL ASSEMBLY KITS

COIL ASSEMBLY KIT FOR 22 mm COIL

The coil assembly kit corresponds to the numbering system for Parker Lucifer® valve housings (Valve - housing - coil/voltage).

It is composed of a nameplate with the details of the valve type, a washer and a nut to secure the 22 mm coil to the valve.

Caution: This coil assembly kits for 22 mm coils are not adapted for high flow valves, ask your distributor for the adapted kit.

KIT OF 100 PIECES

Reference	Specification	Application
488993.50	Standard - aluminium nameplate - passivated washer and nut - pressure indication in [bar]	Standard valves

COIL ASSEMBLY KIT FOR 32 mm COIL

The coil assembly kit corresponds to the "housing" of Parker Lucifer® valve numbering system (Valve - housing - coil/voltage).

It is composed of a nameplate giving details of the valve type, a round washer and a nut to ensure the fixing between 32 mm coil and the valve.

KIT OF 100 PIECES

Reference	Specification	Application
482995.50	Standard - Aluminium nameplate - Passivated iron washer and nut - Pressure indication in [bar]	Standards valves

ACCESSORIES

DIN PLUG CONNECTOR ACCORDING TO EN 175301-803 -B

No. 481043 for Parker Lucifer® coil
No. 600040 for Parker coil

Electrical connection suitable for all 22 mm coils
(e.g. 488980, 481180)

DIN PLUG CONNECTOR ACCORDING TO EN 175301-803 - A

No. 486586 for standard Parker Lucifer® version
No. 492645 for high temperature Parker Lucifer® version
No. 600004 for Parker version

Electrical connection suitable for all 32 mm coils
(e.g. 481865, 492425)

METALIC ASSEMBLY KIT

Nut No. 482213 M14 x 1+ Ring No. 482214 +
O-Ring No. 483917

Coil assembly kit for offshore electrical parts
(e.g. 482870.01, 492210, 492965.01, 496565, 496700)

PLASTIC NUT WITH METAL INSERT

No. 8886

For Oil & Gaz electrical parts
(e.g. 492965.01)

CABLE GLAND

No. 492398 - Pg 13.5 -Ex eb II
No. 493841 - M20x1.5 - Ex ia IIC

Electrical connection and mooring cable with 6 to 12 mm diameter, for electrical parts approved "eb mb" or "ia"
(e.g. 492190, 492965….)

CABLE GLAND

No. 493426 - 1/2"-14 NPT

Electrical connection and mooring cable with 6 to 12 mm diameter, for flameproof approved electrical parts
(e.g. 493640)

INTRODUCTION

Current European regulations concerning electrical equipment for potentially explosive environments are based on optional and partial European directives which require regular modification in the form of application or adaptation directives in order to keep pace with technical developments.

The basic European text in this field, directive **76/117/EC**, which allow the free circulation of goods within the European Union, provides the general framework for the present regulations.

Electrical equipment for use in potentially explosive environments is certified by a government-approved body when it meets relevant European standards (EN 60079-0 and upwards) covering each type of protection (**db**, **ia**, **eb**, **m**, **p**, etc). Such equipment is then issued with a **an EC type examination certificate**, entitling it to carry the distinctive marking.

This mark opens the way for trading within the European Union and occasionally beyond.

Although largely beneficial, it has revealed certain drawbacks, notably a lack of flexibility and the absence of a global concept for safety. It has now been completely revised by the **new European directive 94/9/EC from March 23, 1994**.

The EC type examination certificate to harmonised standards obtained in compliance with previous directives will remain valid until June 30, 2003, but their validity will cover only conformity to the harmonised standards specified in these directives.

EUROPEAN MEMBER COUNTRIES

DEFINITIONS

EXPLOSIVE ENVIRONMENTS

Mixture with air, under atmospheric conditions, of flammable substances in the form of gases, vapours, mists or dusts in which, after combustion has occurred, combustion spreads to the entire unburned mixture.

HAZARDOUS AREAS

A hazardous area is an area in which an explosive gas environment is present, or may be expected to be present, in quantities such as to require special precautions for construction, installation and use of electrical apparatus.

INGREDIENTS FOR AN EXPLOSION

- When combustible materials are mixed with air, an explosive mixture is produced. Danger of explosion therefore exists wherever these hazardous materials are handled: such a condition is to be found on the biggest chemical plant as well as at the smallest filling station.
- Nowadays with the use of electronic and electrical instrumentation in process control, the risk of combustion by electrical energy has increased sharply.
- To protect personnel and expensive equipment special precautions should be taken to prevent combustion of those dangerous substances. Conditions likely to ignite explosive mixtures are as follows:

Three conditions are enough to create an explosion.

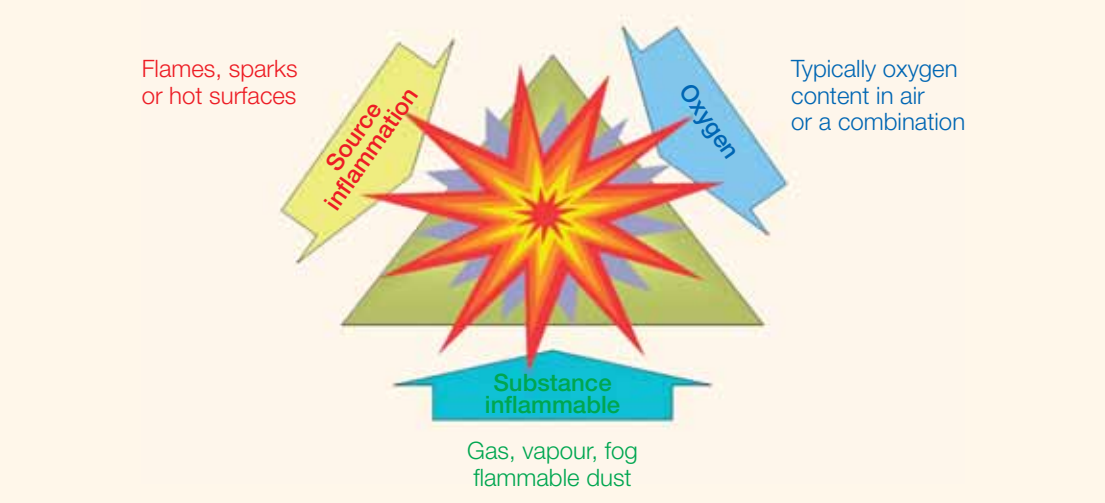

DEFINITIONS

ZONES

The hazardous areas are classified in zones based on the frequency of the occurrence and the duration of an explosive gas or dust environment as follows:

Zone 0 (20)	**Zone 1** (21)	**Zone 2** (22)
An area in wich an explosive **gas (dust)** atmosphere is present CONTINUOUSLY or is present for LONG PERIODS (~1000 h/y).	An area in wich an explosive **gas (dust)** atmosphere is present LIKELY TO OCCUR in normal operation (~10 to 999 h/y).	An area in wich an explosive **gas (dust)** atmosphere is not LIKELY TO OCCUR and if it does occur it will exist for short period only (~1 to 10 h/y).
Mode of protection: **ia** - **ma** - **px** - **...**	Mode of protection: **db** - **eb** - **ib** - **mb** - **pxb** - **...**	Mode of protection: **nc** - **mc** - **ic** - **pz** - **...**

HAZARDOUS LOCATION CLASSIFICATION

Explosive Environment	**Continuous Presence**	**Intermittent Presence** (normal operation conditions)	**Occasional Presence** (abnormal operation)
IEC	**Zone 0** (gas) **Zone 20** (dust)	**Zone 1** (gas) **Zone 21** (dust)	**Zone 2** (gas) **Zone 22** (dust)
Europe	**Zone 0** (gas) **Zone 20** (dust)	**Zone 1** (gas) **Zone 21** (dust)	**Zone 2** (gas) **Zone 22** (dust)
Canada (CEC)[1] **USA** (NEC) [2]	**Cl. I Div. 1** (gas) **Cl. II Div. 1** (dust) **Cl.III Div. 1** (fibres)	**Cl. I Div. 1** (gas) **Cl. II Div. 1** (dust) **Cl.III Div. 1** (fibres)	**Cl. I Div. 2** (gas) **Cl. II Div. 2** (dust) **Cl.III Div. 2** (fibres)

[1] (CEC): Code Canadien d'Electricité / [2] (NEC): National Electrical Code

Example:

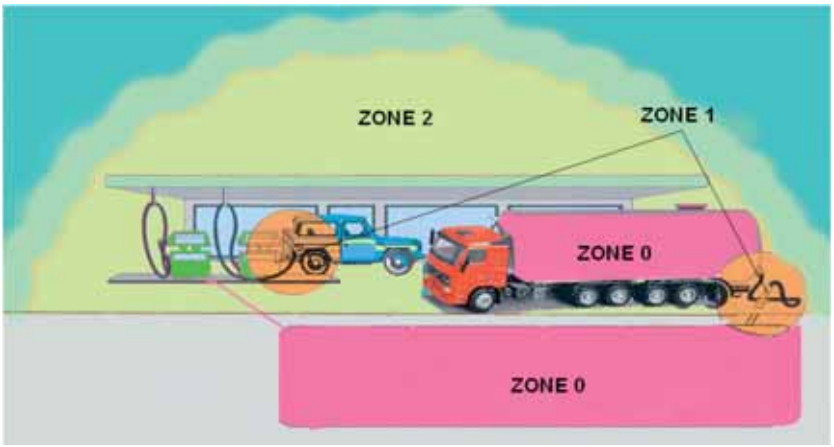

DEFINITIONS

HAZARDOUS LOCATION CLASSIFICATION

Category	Fault protection	Atmosphere	Zone	Example of protections
EC Type examination by Notified Body ⟶ annex III				
1 Very high level	2 types of protection or 2 indépendant faults	**G** (Gas)	**0**	"ia", "ma", "px" or "ia-ma", "db/eb"
		D (Dust)	**20**	
EC Type examination by Notified Body ⟶ annex III				
2 High level	One type of protection	**G** (Gas)	**1**	One type of protection
	Habitual frequent malfunction	**D** (Dust)	**21**	Ib, db, mb, eb, py, o,…
Internal production inspection ⟶ EC declaration of conformity				
3 Normal	Required level of protection	**G** (Gas)	**2**	n, ic, pz, … A, C, L, P, R
		D (Dust)	**22**	

Hazardous Location Classification

Group	Gas Reference
I	Methane
IIA	Propane
IIB	Ethylene
IIC	Hydrogen / Acethylene

Group	Dust Reference
-	-
IIIA	Fibres
IIIB	Non-conductive dust
IIIC	Conductive dust

Surface Temperature Classes

Class Temperature	Max. Temperature
T1	450°C
T2	300°C
T3	200°C
T4	135°C
T5	100°C
T6	85°C

°C: 600, 500, 400, 300, 200, 100, 0

Gas & Ignition Temperature		
560°C	Hydrogen	T1
537°C	Methane	T1
425°C	Ethylene	T2
305°C	Acetylene	T2
210°C	Kerozene	T3
160°C	Ethylether	T4
95°C	Carbon disulphide	T6

PROTECTION MODES

Concept	Code		Zones	
	Gas	Dust	Gas	Dust
Flameproof enclosure	**db**	**tb**	1/2	21/22
Encapstulation	ma / **mb** / mc	**tb** / tc	0/1/2	20/21/22
Increased Safety	**eb**	-	1/2	-
Intrinsic Safety	**ia** / ib / ic	**ta** / tb / tc	0/1/2	20/21/22
Pressurized apparatus	**pxb** / py / pz	pD	1/2	21/22
Concept Cat. 3 apparatus	**nA** nL nR **nC**	- - - -	2 2 2 2	- - - -

In red, protection modes used by parker FCDE.

STANDARDS AND PROTECTION MODES

APPARATUS FOR EXPLOSIVE GAS ATMOSPHERES EQUIPMENT GROUP II

EPL	Standards EN / IEC	Protection	Title
	60079-0	-	General requirements
Ga	60079-11	ia	Intrinsic safety
	60079-18	ma	Encapsulation
	60079-26		Equipment with equipment protection level (EPL) Ga (Zone 0)
	60079-28	op is	Protection of equipment and transmission systems using optical radiation
Gb	60079-1	db	Flameproof enclosures
	60079-2	p, pxb, py	Pressurized enclosures
	60079-5	q	Powder filling
	60079-6	o	Oil immersion
	60079-7	eb	Increased safety
	60079-11	ib	Intrinsic safety
	60079-18	mb	Encapsulation
	60079-25		Intrinsically safe systems
	60079-27		Fieldbus intrinsically safe concept (FISCO)
	60079-28	op is op pr op sh	Protection of equipment and transmission systems using optical radiation
Gc	60079-11	ic	Intrinsic safety
	60079-18	mc	Encapsulation
	60079-15	nA	Non sparking
	60079-15	nR	Restricted breathing enclosure
	60079-15	nL	Limited energy (only old edition)
	60079-15	nC	Equipment producing operational sparks
	60079-2	pz	Pressurized enclosures
	60079-27		Concept de réseau de terrain de sécurité intrinsèque (FISCO)
	60079-28	op is op pr op sh	Protection of equipment and transmission systems using optical radiation

EPL = **E**quipement **P**rotection **L**evel
In red, protection modes used by parker FCDE.

STANDARDS AND PROTECTION MODES

ELECTRICAL EQUIPMENT FOR USE IN AREAS WITH COMBUSTIBLE DUST - EQUIPMENT GROUP III

EPL	Standards EN / IEC	Protection	Title
	60079-0	-	General requirements
Da	60079-31	ta	Protection by enclosure
	60079-11	ia	Protection by intrinsic safety (iaD IEC/EN 61241-11)
	61241-18	ma	Protection by encapsulation
Db	60079-31	tb	Protection by enclosure
	60079-11	ib	Protection by intrinsic safety (ibD IEC/EN 61241-11)
	60079-18	mb	Protection by encapsulation
	IEC 61241-4	pD	Type of protection "pD"
Dc	60079-31	tc	Protection by enclosure
	60079-11	ic	Protection by intrinsic safety
	60079-18	mc	Protection by encapsulation
	IEC 61241-4	pD	Type of protection "pD"

EPL = **E**quipement **P**rotection **L**evel
In red, protection modes used by parker FCDE.

NON ELECTRICAL EQUIPMENT FOR USE IN POTENTIALLY EXPLOSIVE ATMOSPHERE

Standards	Protection	Title
EN 13463-1	-	Basic method and requirements
EN 13463-2	fr	Protection by flow restricting enclosure
EN 13463-3	db	Protection by flameproof enclosure
EN 13463-5	c	Protection by constructional safety
EN 13463-6	b	Protection by control of ignition source
EN 13463-7	p	Protection by pressurized enclosure
EN 13463-8	k	Protection by liquid immersion

ZONES AND EQUIPEMENT PROTECTION LEVEL (EPL)

Gas		Dust	
Zone	EPL	Zone	EPL
0	Ga	20	Da
1	Ga and Gb	21	Da and Db
2	Ga, Gb and Gc	22	Da, Db and Dc

CATEGORIES AND EQUIPEMENT PROTECTION LEVEL (EPL)

Categories	Gas	Dust	Safety
1	Ga	Da	Very high
2	Gb	Db	High
3	Gc	Dc	Normal

EXAMPLES OF MARKING

ELECTRICAL APPARATUS FOR EXPLOSIVE GAS ATMOSPHERES EQUIPMENT GROUP II

Protection Mode

Ex db IIC T5 Gb

Equipment Groups (Gas)	
IIA	Aceton, ethane, benzene, petrol, butane, propane, methane
IIB	Ethylene, town gas
IIC	Hydrogen, acetylene

Temperature Class	Ignition Temperature of Gas or Vapour	Maximum admissible surface temperature for permanently hot surfaces
T1	> 450°C	440°C
T2	> 300°C	290°C
T3	> 200°C	195°C
T4	> 135°C	130°C
T5	> 100°C	95°C
T6	> 85°C	80°C

Zone	Equipment Protection Level (EPL)
0	**Ga**
1	**Gb** and **Ga**
2	**Gc**, **Gb** and **Ga**

ELECTRICAL EQUIPMENT FOR USE IN AREAS WITH COMBUSTIBLE DUST - EQUIPMENT GROUP III

Protection Mode

Surface Temperature Max.

Ex tb IIIC T95°C Db

Equipment Groups (Dust)	
IIIA	Fibres
IIIB	Non-conductive dust
IIIC	Conductive dust

Zone	Equipment Protection Level (EPL)
20	**Da**
21	**Db** and **Da**
22	**Dc**, **Db** and **Da**

WHAT ABOUT THE DIRECTIVE ?
(94/9/EC - 1994-03-23)

WHAT ABOUT THE DIRECTIVE ? (94/9/EC - 1994-03-23)

In keeping with the **"new approach"**, the new directive lays down the framework for a total harmonization of regulations covering this field.

It makes no direct references to standards but sets out the essential health and safety requirements to be met and introduces the **CE** marking.

ATEX 100 A DIRECTIVE - NEW APPROACH

GROUP I (mines)	GROUP II (surface)	DIRECTIVE (machines)
82/130/CEE 88/035/CEE 91/269/CEE 94/044/CEE	76/117/CEE 79/196/CEE 84/047/CEE 88/571/CEE 90/487/CEE 94/026/CEE	98/37/CE (ESR 1.5.7)

94/9/EC

THE FRAMEWORK OF THE DIRECTIVE

The main principles of the new directive can be summarized as follows:

- It applies to **electric** and **non-electric** equipment.
- It defines **essential health and safety requirements**.
- It takes into consideration **all potential hazards** equipment may cause, in particular at design and production level.
- **The one directive** applies to both **mines** susceptible to fire damp and **surface industries**.
- It stresses the importance of equipment being **used in accordance with its intended purpose**.
- It recognises The European Standards Committee **CEN** and the European Committee for Electrotechnical Standardisation **CENELEC** as competent bodies to fix the required harmonised standards.
- It provides for the **contribution of labour and management**.
- It defines **procedures for assessing conformity** to essential requirements, on the basis of modules which qualify equipment to carry the **CE** mark of conformity.

APPLICATIONS

The directive applies to the industrial field and concerns the following equipment:

- **Equipment** (machines, apparatus, etc.)
- **Protective systems** (discharge devices, explosion suppression devices, etc.)
- **Components** (parts with no autonomous function, terminals, etc.)
- **Safety devices, controlling devices and regulating devices** intended for use outside potentially explosive environments but required for safety with respect to explosions (relays, barriers, pressure switches, thermostats, etc.)

WHAT ABOUT THE DIRECTIVE ?
(94/9/EC - 1994-03-23)

EXCLUDED FROM THE SCOPE OF THE NEW DIRECTIVE

The following equipment falls outside the scope of the new directive:

- Medical devices intended for use in a medical environment.
- Equipment and protective systems relating only to the risk of explosion of unstable chemical substances (explosives, etc.)
- Equipment intended for use in domestic and non-commercial environments.
- Personal protective equipment covered by directive 89/686/EC.
- Seagoing vessels and mobile offshore units.
- Means of transport, except for vehicles intended for use in a potentially explosive environment.

APPLICATION DATES

ATEX 100A DIRECTIVE - NEW APPROACH	
94/9/EC	
Application dates	
• Transposition to national law	1/9/1995
• Application (optional)	1/3/1996
• Application (total)	1/7/2003

POTENTIAL IGNITION SOURCES AND OTHER HAZARDS TO BE CONTROLLED

The following all represent potential hazards:

- Various sources of ignition, such as sparks, flames, electric arcs, high surface temperature, acoustic energy, optical radiation or electromagnetic waves.
- Static electricity.
- Pressure compensation operations.
- Disturbance from external sources, such as changing environmental conditions, extraneous voltage, humidity, vibration or contamination.

Provision is also made for specific requirements governing devices used to provide additional equipment safety.

These requirements necessitate detailed analysis to asses the operational reliability of such devices and their interaction with other components connected with the equipment.

GUIDANCE CHART FOR IS-BARRIERS

Manufacturer	Reference	Ex	IS Standard Electrical Parts							IS Booster Electrical Parts		
			Ex ia IIC T6 488650.01/02 488660,01 488670,01 LCIE/AUS	Ex ia IIC T6 490885 490890 (490895) LCIE/FM/CSA	Ex ia IIC T6 483580.01/03 483960.01/03 LCIE/AUS	Ex ia 490880 (493997) LCIE/FM/CSA	Ex ia IIB T6 482160,01 LCIE	Ex ia IIC T6 482870,01 LCIE	Ex ia 492335 LCIE/FM/CSA	Ex ia IIC T6 492965.01/02 LCIE	Ex ia IIC T6 496565 LCIE	Ex ia IIC T6 495910 LCIE
A puissance 3	NAEV 22-140	ia	●	-	●	-	●	●	-	●	●	●
	NAEV 26-100	ia	●	-	●	-	●	●	-	●	●	●
ABB	V171132-54	ib	●	-	●	-	●	●	-	●	●	●
	V171132-55	ib	●	-	-	-	●	●	-	●	●	●
	V171132-61	ia	●	-	-	-	●	●	-	●	●	●
	DO 890	ib	●	-	●	-	●	●	-	●	●	●
	S900-DO4-EX	ib	●	-	●	-	●	●	-	●	●	●
BRADLEY	FEX-EX 24V	ia	●	●	●	●	●	●	-	●	●	●
COOPER	LB 2101	ia	●	●	●	●	●	●	●	●	●	●
	LB 2105	ia	●	●	●	●	●	●	●	●	●	●
	LB 2112	ia	●	●	●	●	●	●	●	●	●	●
ELCON	1881 / 1882	ia	●	●	●	●	●	●	●	●	●	●
	471 / 472	ia	●	●	●	●	●	●	●	●	●	●
	2871/2872	ia	●	●	●	●	●	●	●	●	●	●
	2874/2875/2876	ia	●	●	●	●	●	●	●	●	●	●
GEORGIN	AVB 122	ia	●	-	●	-	●	●	-	●	●	●
	AVB 125	ia	●	-	●	-	●	●	-	●	●	●
	AVB 128	ia	●	-	●	-	●	●	-	●	●	●
Hima	F3328A	ib	●	-	●	-	●	●	-	●	●	●
	F3335	ib	●	-	-	-	●	●	-	●	●	●
	H4007	ib	●	-	●	-	●	●	-	●	●	●
MTL	728P, 7128P, 7728P	ia	-	-	-	-	●	-	-	●	●	●
	728, 7028, 7128, 7728	ia	●	●	●	●	●	●	●	●	●	●
	3021, 4021, 4021S	ia	●	-	●	-	●	●	-	●	●	●
	3022	ia	-	-	-	-	●	-	-	-	-	-
	4023	ia	-	-	-	-	●	-	-	-	-	-
	4024	ia	●	-	●	-	●	●		●	●	●
	4025	ia	●	●	●	●	●	●	●	●	●	●
	5021, 5023, 5024	ia	●	-	●	-	●	●	-	●	●	●
	5025	ia	●	-	●	-	●	●	●	●	●	●
	4521 / 4523 / 4524	ia	●	-	-	-	●	●	●	●	●	●
	5521 / 5523 / 5524	ia	●	-	-	-	●	●	●	●	●	●
Pepperl & Fuchs	Z 728	ia	●	●	●	●	●	●	●	●	●	●
	Z 779	ia	●	●	●	●	●	●	●	●	●	●
	EGA-041-3	ia	-	●	●	●	●	●	●	●	●	●
	KFD2-SD-EX1.36	ia	-	-	-	-	-	●	-	-	-	-
	KFD2-SL-EX1.36	ia	-	-	-	-	-	●	-	-	-	-
	KFD2-SD-EX1.48	ia	-	●	-	●	-	●	●	●	●	●
	KFD2-SL-EX1.48	ia	-	●	-	●	-	●	●	●	●	●
	KFD2-SL-EX1.48.90A	ia	-	-	-	-	-	-	-	●	●	●
	KFD2-SL-EX1.48.90A	ia	-	-	-	-	-	-	-	●	●	●
	KFD2-SL2-EX1.LK	ia	-	●	-	●	-	●	●	●	●	●
	KFD2-SL2-EX2	ia	-	●	-	●	-	●	●	●	●	●
	KSD2-BO-EX	ia	-	●	●	●	●	●	●	●	●	●
	RSD-BO-EX4	ib	-	●	-	●	-	●	●	●	●	●
	RSD-VO-EX8	ib	-	-	-	-	-	-	-	●	●	●

GUIDANCE CHART FOR IS-BARRIERS

Manufacturer	Reference	Ex	IS Standard Electrical Parts							IS Booster Electrical Parts		
			Ex ia IIC T6 488650.01/02 488660,01 488670,01 LCIE/AUS	Ex ia IIC T6 490885 490890 (490895) LCIE/FM/CSA	Ex ia IIC T6 483580.01/03 483960.01/03 LCIE/AUS	Ex ia 490880 (493997) LCIE/FM/CSA	Ex ia IIB T6 482160,01 LCIE	Ex ia IIC T6 482870,01 LCIE	Ex ia 492335 LCIE/FM/CSA	Ex ia IIC T6 492965.01/02 LCIE	Ex ia IIC T6 496565 LCIE	Ex ia IIC T6 495910 LCIE
SIEMENS	5RD00-0AB0	ib	-	-	-	-	-	-	-	●	-	-
	7RD00-0AB0	ia	-	-	-	-	-	-	-	●	●	●
	7RD01-0AB0	ia	-	-	-	-	-	-	-	●	●	●
	7RD10-0AB0	ia	-	-	-	-	-	-	-	●	●	●
	7RD11-0AB0	ia	-	-	-	-	-	-	-	●	●	●
	7RD20-0AB0	ia	-	-	-	-	-	-	-	●	●	●
	7RD21-0AB0	ia	-	-	-	-	-	-	-	●	●	●
STAHL	9001/01-252-100-14	ia	●	●	27 V	27 V	●	●	●	●	●	●
	9001/01-280-100-10	ia	●	●	24 V	24 V	●	●	●	●	●	●
	9001/01-280-110-10	ia	●	-	24 V	-	●	●	-	●	●	●
	9002/13-280-100-04	ia	24 V	24 V	27 V	27 V	24 V	24 V	24 V	17 V	17 V	17 V
	9311/52-11-10	ia	-	●	●	25 V	25 V	●	●	15 V	15 V	15 V
	9111/63-11-00	ia	-	●	●	25 V	25 V	●	●	15 V	15 V	15 V
	9351/10-15-10	ia	-	●	●	-	-	●	●	●	●	●
	9351/10-16-10	ia	-	●		●	-	●	●	●	●	●
	9351/10-17-10	ia	-	-	-	-	-	●	-	-	-	-
	9381/10-187-050-10	ib	-	●	●	●	●	●	●	●	●	●
	9381/10-246-055-10	ib	-	●	●	●	●	●	●	●	●	●
	9381/10-246-070-10	ib	-	●	●	●	●	●	●	●	●	●
	9465/12-04-11	ib	-	●	●	-	-	●	●	●	●	●
	9475/12-04-21	ia/ib	-	●	-	●	-	●	●	●	●	●
	9475/12-04-31	ia/ib	-	-	-	-	-	-	-	●	●	●
	9475/12-08-41	ia/ib	-	-	-	-	-	-	-	-	-	-
	9475/12-08-51	ib	-	-	-	-	-	-	-	●	●	●
	9475/12-08-61	ia/ib	-	-	-	-	-	-	-	-	●	●
Turck	MK72-S01-EX	ib	-	-	-	-	●	●	-	●	●	●
	MK72-S02-EEX	ib	-	-	-	-	●	●	-	●	●	●
	MK72-S04-EEX	ib	●	-	●	-	●	●	-	●	●	●
	MK72-S05-EEX	ib	●	-		-	●	●	-	●	●	●
	MK72-S06-EEX	ib	●	-	●	-	●	●	-	●	●	●
	MK72-S07-EEX	ib	●	-		-	●	●	-	●	●	●
	MK72-S09-EEX	ia		-		-			-	-	-	-
	MK72-S12-EEX	ia	●	-	●	-	●	●	-	●	●	●
	MC72 - 41	ia	●	-	●	-	●	●	-	●	●	●
	MC72 - 43	ia	●	-	●	-	●	●	-	●	●	●
	MC72 - 44	ia		-	-	-			-	●	●	●
BARTEC	07-7331-2301/1000	ia	●	-	-	-	●	●	-	●	-	-
	07-7331-2301/1100	ia	●		●		●	●		●	-	-

If barrier reference not listed, consult factory for compatibility (tech.support@parker.com)

TECHNICAL INFORMATION ABOUT SOLENOID VALVES

TECHNICAL INFORMATION ABOUT SOLENOID VALVES

General Information

Solenoid valves are electro-mechanical devices used for interrupting or diverting the flow of fluids by opening or closing one or more orifices.

The solenoid valve is a combination of three basic components:

1. An electromagnet consisting of a solenoid (windings) and a magnetic yoke.
2. A pilot with a moveable plunger (which, in some cases directly opens and closes the valve).
3. A valve body with an orifice opened or closed by plunger or diaphragm to enable or prevent flow of the medium.

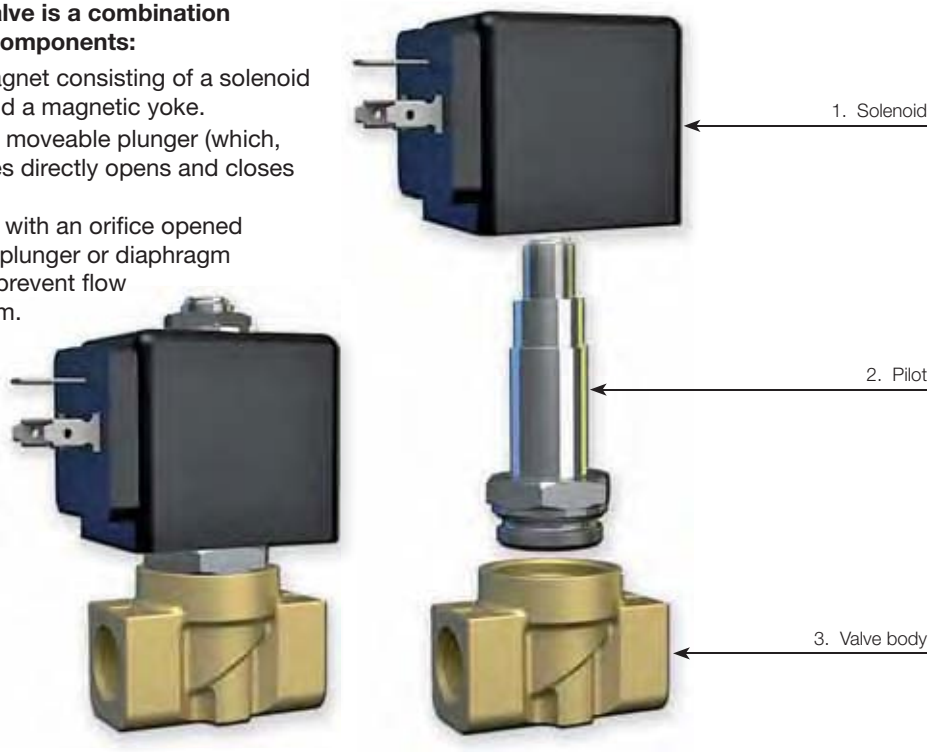

Operating principles

The term solenoid refers to operator and coil, also known as pilot or magnetic actuator.

The coil consists of copper wire wound on a support reel. When electric current is applied into the coil, magnetic flow lines are generated which are stronger in the coil center.

This magnetic flow raises the moveable plunger in the coil until it brings it into contact with the pole piece. The valve body has an orifice through which the fluid flows when the valve is open.

The moveable plunger has an integral seat which when the solenoid coil is energised, moves off the valve (direct operated) orifice or diaphragm (pilot operated) orifice opening the valve.

When the coil is de-energised, a return spring brings the plunger back to the original closing position, thus cutting off the flow of the fluid.

BASIC COMPONENTS OF A SOLENOID VALVE

Valve body: Main part of the solenoid valve including ports, seat and orifices.

Solenoid tube assembly: Cylinder, in stainless steel, hermetically sealed and closed at one extremity. It is the guide channel of the moveable plunger which is moved magnetically. The solenoid coil is fitted on the external side of the enclosing tube.

Moveable plunger: Made by ferritic stainless steel, it is attracted by the solenoid magnetic field and slides inside the tube.

Plunger spring (or return spring): Used to hold the moveable plunger in position and to return it when de-energized.

Seat seal: Part of the moveable plunger, it is used to close a valves main orifice or pilot orifice.

Electromagnet (or solenoid coil): Electrical part consisting of a copper windings (solenoid) along, with a magnetic yoke (armature), when electric current flows through, it generates a magnetic field atracting the moveable plunger.

Housing: Part that contains and protects the coil.

Yoke: Metalic case surounding the coil and concentring electro-magnetic force on the moveable plunger.

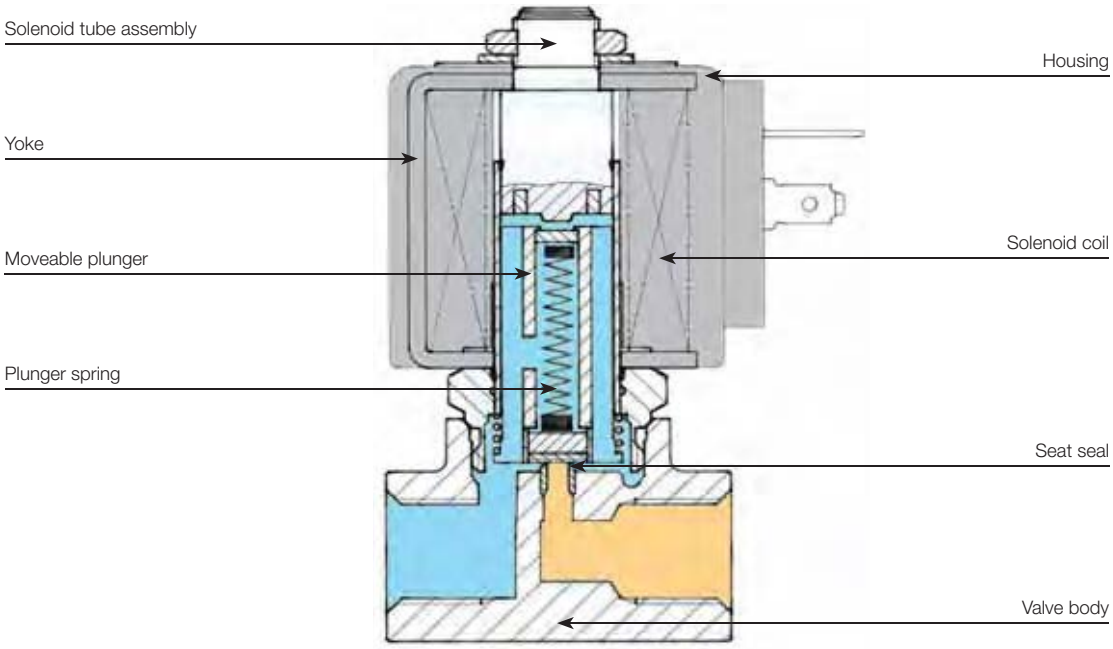

TECHNICAL VOCABULARY USED IN TABLES

Actuation	Body	Function	Port Size	Orifice (mm)	Flow Factor Kv(l/min)	MOPD (bar)	Max Fluid Temp. (°C)	Page Parker Valves	Page Parker LUCIFER® Valves

NORMALLY CLOSED

Port size	Orifice Ø	Flow factors			Operating Pressure Differential			Fluid Temp.		Seat Seal	Parker LUCIFER® Valves			Power		Coil Group	Dwg. No.
					Min	Max(MOPD)		Min	Max		Valve Ref.	Housing Ref.	Coil Ref.				
BSP	mm	Kv l/min	KV m^3/h	Qn l/min	bar	AC bar	DC bar	°C	°C					AC W	DC W		

The basic technical features of each solenoid valve are indicated in the tables, the terminology used is shown and explained below. Please notice that in certain sections you will have the choice between two product ranges: Parker valves, within blue tables and the Parker Lucifer valves, within orange tables.

Actuation: The mechianical method used to control the flow.

Body: Main part of the solenoid valve with the ports, seats and orifice needed.

Function: The way the valve operates when de-energised.

Port Size: Fitting dimensions are defined as threaded in inches (G), in BSP or Sub-base, when a flat interface for ports is adopted.

Orifice (mm): Main orifice diameter in millimetres (nominal diameter).

Flow Factors: Define the quantity of water which flows through the solenoid valve with a pressure drop of 1 bar during one minute. Expressed in l/min and m^3/h.

Max Fluid Temperature: Maximum fluid temperature the valve can withstand.

Max Ambient Temperature: Maximum ambient temperature the valve can withstand.

Minimum Operating Pressure Differential: The lowest differential pressure required for operation (bar).

Maximum Operating Pressure Differential (MOPD): The highest working differential pressure with 90% of the rated voltage (-10% Vn) applied to the solenoid coil (for AC) and 95% of the rated voltage (-5% Vn)(for DC).

NORMALLY CLOSED

Port size	Orifice Ø	Flow factors			Operating Pressure Differential			Fluid Temp.		Seat Seal	Parker Valves			Power		Coil Group	Dwg. No.
					Min	Max(MOPD)		Min	Max		Valve Order Number	Valve Type	Coil Type				
BSP	mm	Kv l/min	KV m³/h	Qn m³/h	bar	AC bar	DC bar	°C	°C					AC W	DC W		

Fluid Temperature: Minimum and Maximum admissible temperature for the media used (°C).

Seat seal: Material used for the seat discs.

Valve order number: Applicable for Parker Valves shown in blue tables.
The valve order number refers to the valves only.
(please refer to the "How To Order" section for more details).

Valve ref.: Applicable for Parker Lucifer Valves shown in orange tables.
The valve ref. refers to the valve.
(please refer to the "How To Order" section for more details).

Valve type: Refers to the Parker valve type

Housing ref.: Only for Parker Lucifer valves shown in orange tables, you can choose the housing to protect the coil.

Coil Ref.: Compatible coil reference.

Coil type: Compatible coil advised.

Power: Power consumption of a specific electrical part on selected pressure vessel, rated by AC and DC (W). Power consumption must be considered in cold conditions for the coil, at TAmb: +20°C.
For 483510, 481865 and 496081 series, power consumption indicated in the tables must be considered in warm conditions.

Coil group: Please refer to the specific section for the coil compatibility groups.

Dwg. No.: Drawing number.

TECHNICAL INFORMATION

Solenoid valves are highly engineered products that can be used in many diverse applications.

In addition to operational functionality, media compatibility and suitability for the operating environement when selecting the best product for a given application.

This section provides a brief overview of the components, actuation and function modes of solenoid valves avaible from Parker Hanninfin - FCDE.

Different Technologies:

Solenoid valves are electrically operated devices used to control flow.
The most common types of solenoid valve are:

Direct Operated Valves

Magnalift Valves

Pilot Operated Valves

DIRECT OPERATED VALVE

Magnetic force is used directly to open or close the plunger which controls the passage of the fluid. Performances are limited by the coil, the pressure, and the valve orifice size. For direct operated valves, the minimum working pressure is 0 bar and the maximum pressure relies on the combination (valve/coil) chosen.

Direct Operated Valve

De-energised

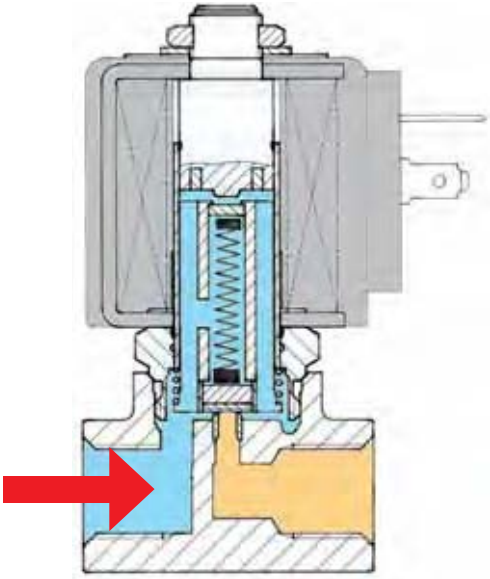

Energised

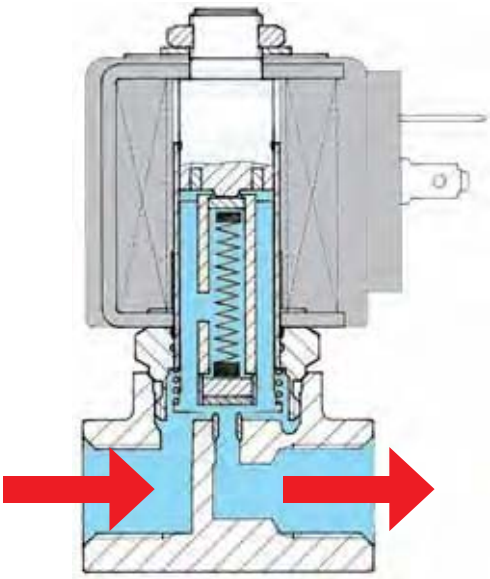

Example:

- 121 Series
- 146 Series
- N74 Series

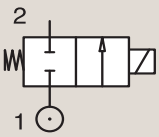

PILOT OPERATED VALVE

To control a higher flow, it is necessary to use pilot operated valves. The supply pressure enters the direct operated "pilot stage" which directs the flow to a "pilot chamber" which,in turn, applies the pilot pressure over a large area (generally a diaphragm or piston). Therefore, a large force is generated to move the main sealing elements against higher pressure or over a large orifice.
One condition of operation is to have a minimum pressure available to shift the valve (indicated in the catalogue). In most applications, this presents no particular problems (refer to magnalift valve section). The pressure rating of the valve starts between 0.1 to 0.5 bar (depending on the valve).
(NB. Pilote Operated Valves are also called Servo Operated Valves).

Pilot Operated Valve

De-energised

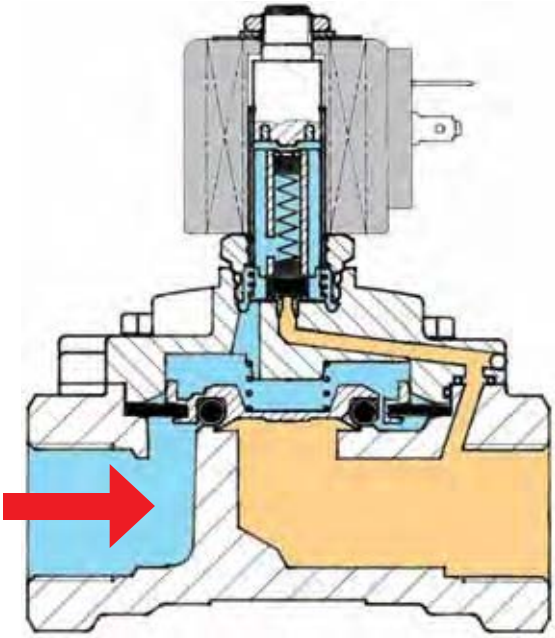

Energised

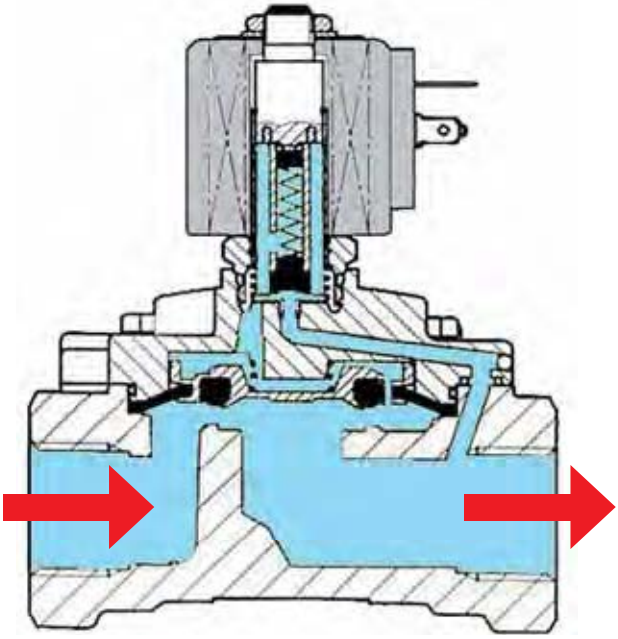

Example:

- 321 Series
- 7321B Series
- 168.1 Series

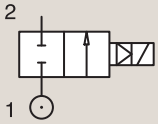

MAGNALIFT VALVE

The magnalift valves combine the features of the direct operated and pilot operated valves. A mechanical link between the plunger and diaphragm retainer allows the valve to operate as a direct operated valve at low pressures and as a pilot operated valve at higher pressures. Magnalift valves are specially designed for applications where 0 pressure is needed to operate the valve, as well as bigger flow than a direct operated valve.

Magnalift Operated Valve

De-energised

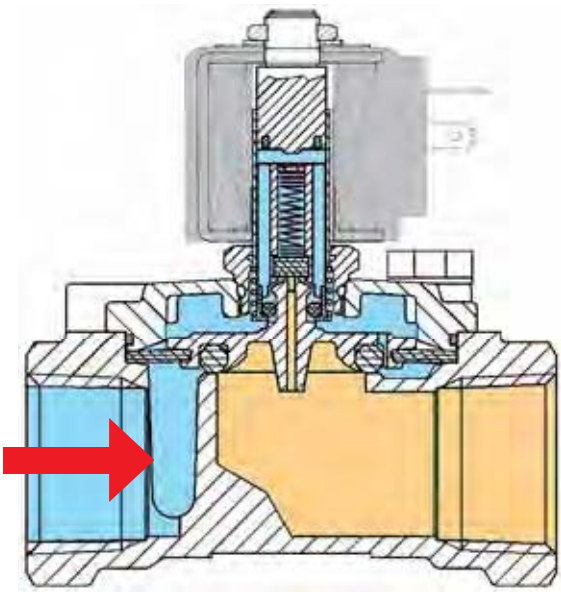

Energised

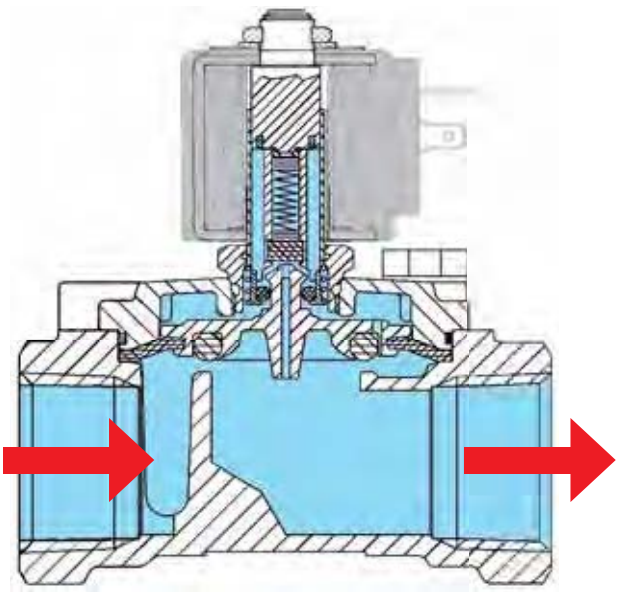

Example:

- 221 Series
- 123 Series

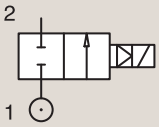

NORMALLY CLOSED VALVE

Most of our valves are available in normally closed and normally open configuration when not energized. In certain applications, you may require a normally open valve (open function in case of current failure). The differentiating factor of design of this technology, is based upon the design of the seat seal, which is reversed in comparaison to a normally closed valve.

Normally Closed Valve

De-energised

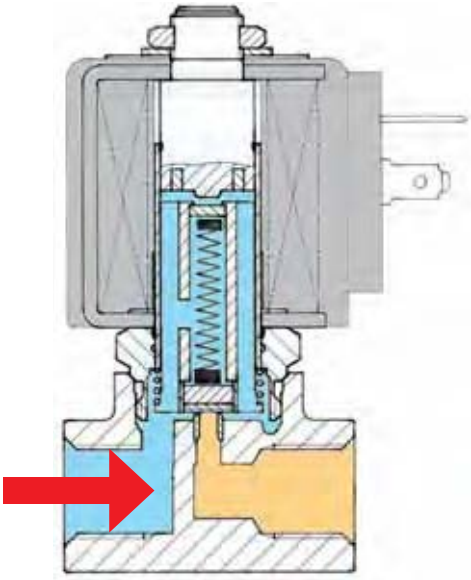

Energised

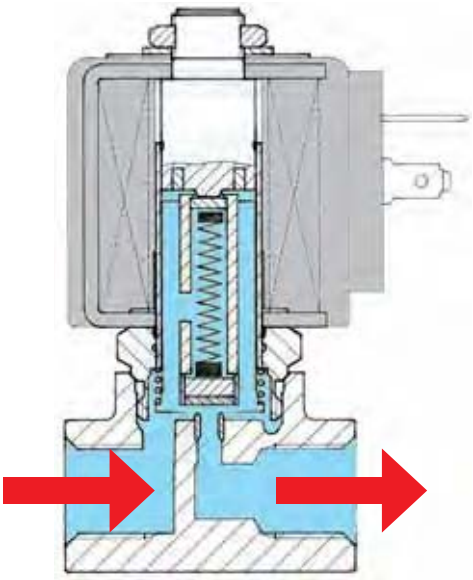

Example:

- 121 Series
- 146 Series
- N74 Series

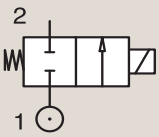

NORMALLY OPEN VALVE

Normally Open Valve

De-energised

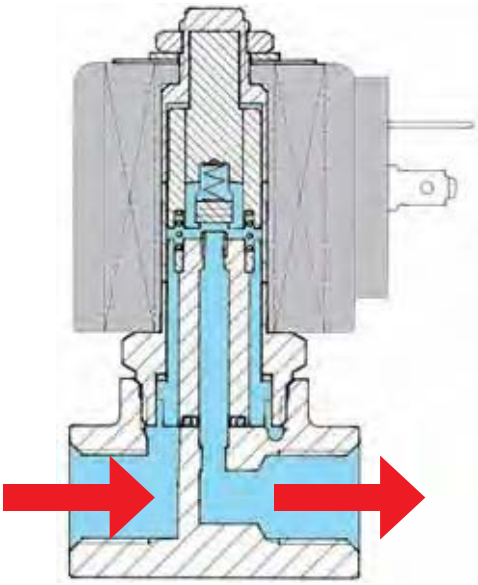

Energised

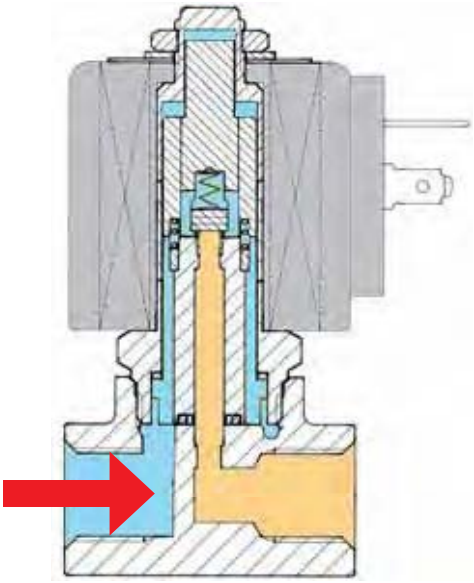

Example:

- 122 Series
- 136 Series
- 7322B Series

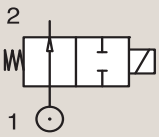

FLOW AND PRESSURE RANGES

Area of operation:

Each valve principle, as described in the previous pages, has a defined area of operation related to its pressure and flow capabilities. The following graph shows which type of valve is suitable for a certain situation.

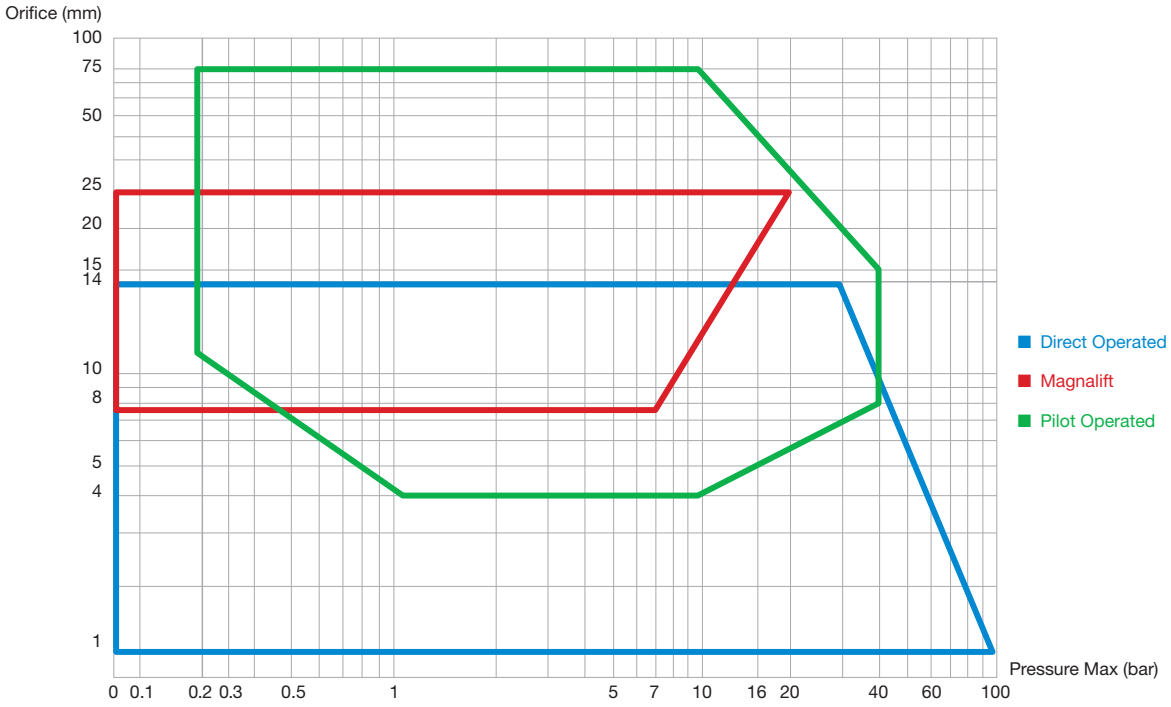

Areas of operation of Parker solenoid valves.

SIZING SOLENOID VALVES

The correct choice of solenoid valve is essential as it determines the regulation and performance required for practical application on a system. In order to decide on the exact type of solenoid valve, various parameters have to be known.

However the calculation method, based on the flow coefficient Kv, has proved highly practical as it can be determined on the basis of:

- Required flow rate
- Flow resistance
- Type of fluid and relative viscosity
- Specific gravity and temperature

This flow coefficient Kv is determined as defined in the VDI/VDE 2173 standards.
It represents the flow of water in m3/h or L/min with a temperature from 5 to 30°C which passes through the solenoid valve with a pressure drop of 1 bar.

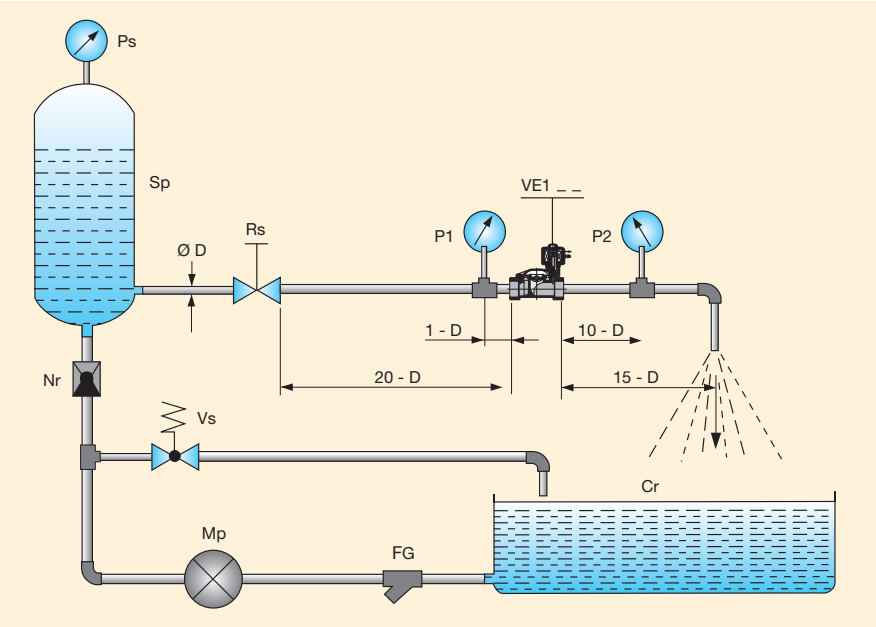

Note:

The flow coefficient used in the USA is known as Cv and represents the water flow rate in US gallons per minute with a pressure drop ΔP of 1 psi.

To convert **C_V** in **Kv** and vice versa use:

1 K_V = 0.862 C_V
1 C_V = 1.16 K_V

FG = Grid Filter **Mp** = Pump **Vs** = Safety Valve **Nr** = Check Valve **Sp** = Pressure Tank **Ps** = Static Pressure Manometer

After existing conditions have been converted into this factor Kv, the type of valve is found by referring to the pages in the related sections in this catalogue.

Parameters used for selecting the solenoid valve are in the table next page.

Consult conversion tables of the various units of measurement as defined by the ISO (International Standards Organisation) - I.S. (International System) set out in this catalogue.

FLOW AND PRESSURE RANGES

Pressure
symbol **(P)**
unit of measurement **[bar]**
Working pressure

Pressure drop
symbol **(ΔP)**
unit of measurement **[bar]**
Pressure difference between inlet (P_1) and outlet (P_2) of the solenoid valve when a medium is flowing through the valve ($\Delta P = P_1 - P_2$).

Flow cœfficient
symbol **(Kv)**
unit of measurement **[l/min]**

Specific gravity of the medium
symbol **(γ)**
unit of measurement **[Kg/dm³]**

Temperature of the medium
symbol **(t)**
unit of measurement **[°C]**

Flow rate
- for liquids
  symbol **(Q)**
  unit of measurement **[l/min]**
- for gases
  symbol **(Qn)**
  unit of measurement **[Nm³/h]**
- for steam
  symbol **(Qv)**
  unit of measurement **[Kg/h]**

Specific volume
symbol **(Vs)**
unit of measurement **[m³/Kg]**

a) Solenoid valves for liquids:

Flow rate: $Q = Kv \cdot \sqrt{\frac{\Delta P}{\gamma}}$ where: $Q = l/min$, $\Delta P = bar$, $\gamma = Kg/dm^3$

Flow coefficient:

$$Kv = Q \cdot \sqrt{\frac{\gamma}{\Delta P}}$$

In the case of liquids with viscosity greater than 3°E (22 cStokes) the Kv is modified according to the formula:

$$Kv_1 = Kv + C \qquad C = \frac{\delta \cdot \sqrt{Kv}}{200 \cdot Q} + 1$$

where C is the viscosity correction factor calculated by means of the formula:
where:
δ = kinematic viscosity of the fluid expressed in centistokes
Kv = flow rate factor of the solenoid valve
Q = flow rate in l/min

Pressure drop:

$$\Delta P = \gamma \cdot \left(\frac{Q}{Kv}\right)^2$$

b) Solenoid valves for gases:

If $\Delta P \leq 1/2\ P_1$ use the following formulae:

Flow rate: $Qn = 514 \cdot Kv \cdot \sqrt{\dfrac{\Delta P \cdot P_2}{\gamma n \cdot (273 + t)}}$

where: $Qn = Nm^3/h$ $P_1 = bar$ $P_2 = bar$

Flow coefficient: $Kv = \dfrac{Qn}{514} \cdot \sqrt{\dfrac{(273+t) \cdot \gamma n}{\Delta P \cdot P_2}}$

$t = °C$
$\gamma n = Kg/dm^3$

Pressure drop: $\Delta P = \dfrac{(273 + t) \cdot \gamma n}{P_2} \cdot \dfrac{Qn^2}{(514 \cdot Kv)^2}$

If $\Delta P > 1/2\ P_1$ use the following formula:

$$Qn = 757 \cdot Kv \cdot \sqrt{\frac{\Delta P \cdot P_2}{(273 + t) \cdot \gamma n}}$$

c) Solenoid valves for steam:

If $\Delta P \leq 1/2\ P_1$ use the following formulae:

Flow rate: $Qv = 31{,}7 \cdot Kv \cdot \sqrt{\dfrac{\Delta P}{Vs}}$

where: $Qv = Kg/h$ $\Delta P = bar$ $Vs = m^3/Kg$

Flow coefficient: $Kv = \dfrac{Qv}{31{,}7} \cdot \sqrt{\dfrac{Vs}{\Delta P}}$

Pressure drop: $\Delta P = Vs \cdot \dfrac{Qv^2}{(31{,}7 \times Kv)^2}$

If $\Delta P > 1/2\ P_1$ use the following formula:

$$Qv = 22{,}4 \cdot Kv \sqrt{\frac{P_1}{Vs}}$$

Notes:

1) Should the value ΔP not be specified, use the following, which is based on experience:

- For liquids only in the case of free discharge $\Delta P = 90\%$ of the input pressure (P_1).
- For gases never use a ΔP of more than 50% of the absolute inlet pressure, since the excessive pressure drop may cause an irregular flow rate. In most cases, ΔP can be considered as 10% of the input pressure.

2) Specific volume value (Vs) for dry saturated steam, see the table in diagram 3.

FLOW RATE FOR LIQUIDS

The liquid flow through a pipe or a valve is given by:

$$Q = Kv \cdot \sqrt{\frac{\Delta P}{\gamma}}$$

Where
- **Q** = Flow **[l/min]**
- **ΔP** = Differential Pressure **[bar]**
- **γ** = Density of the fluid **[kg/dm³]** (water γ = **1 [kg/dm³]**)
- **kv** = Flow Factor **[l/min]**

Flow factor kv:

The kv flow factor of a valve is defined as the flow rate of water in litres per minute with a pressure drop of 1 bar across the valve.

Valve manufactuerers use different definitions for kv. It may be expressed in l/h or m³/h.

Care should therefore be taken when comparing values.

Maximum flow rate Qmax.

For particular 2-way valves the maximum flow must be limited for reasons of mechanical resistance and durability.

A very high flow velocity may dislocate a popet sealing or a diaphragm.

Maximum flow rates are indicated in the catalogue.

Flow factors

Kv l/min	KV m³/h	Qn l/min

NORMALLY CLOSED

Port size	Orifice Ø	Flow factors			Operating Pressure Differential			Fluid Temp.		Seat Seal	Parker LUCIFER® Valves			Power		Coil Group	Dwg. No.
					Min	Max(MOPD)		Min	Max		Valve Ref.	Housing Ref.	Coil Ref.				
BSP	mm	Kv l/min	KV m³/h	Qn l/min	bar	AC bar	DC bar	°C	°C					AC W	DC W		

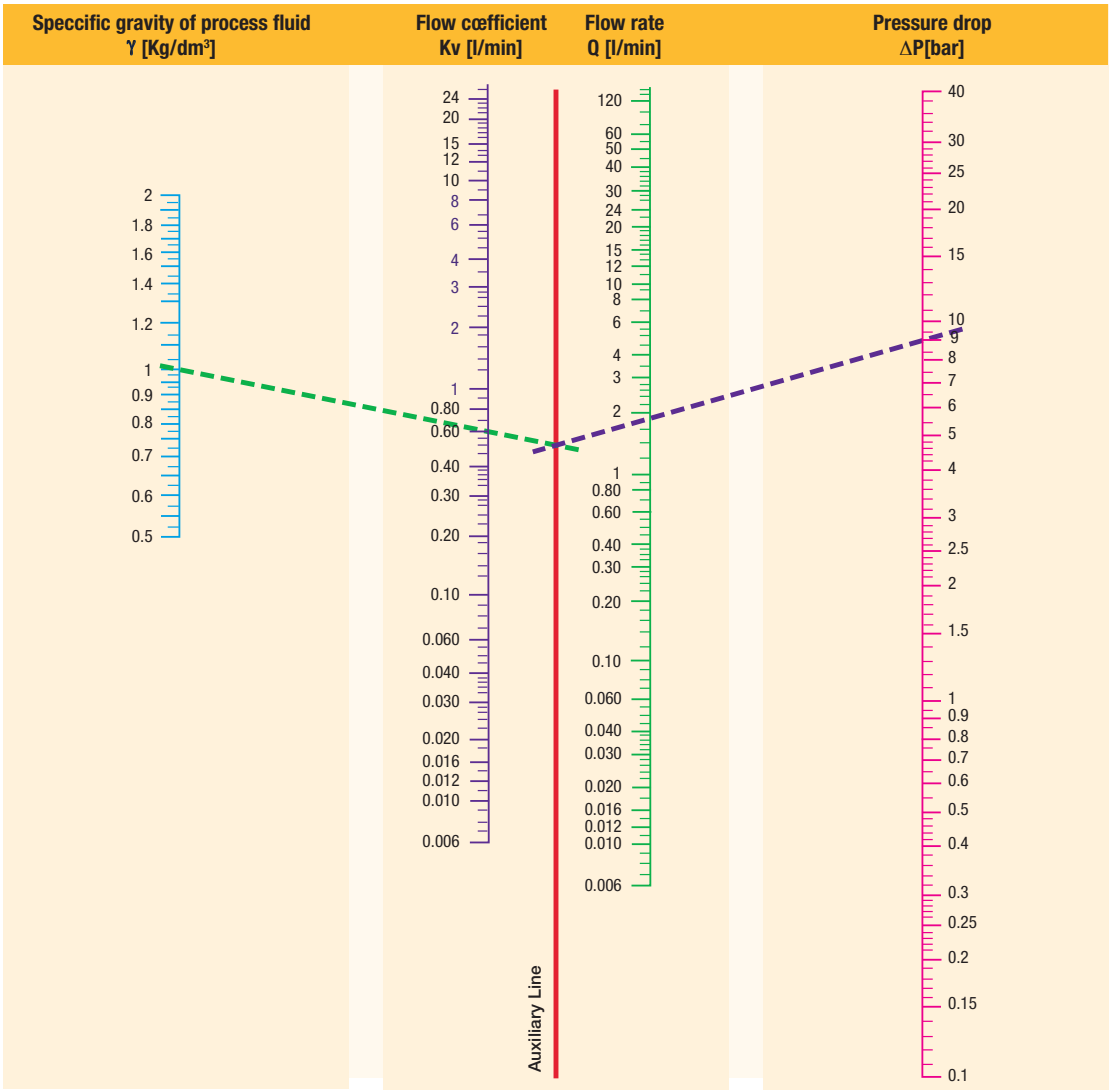

Monogram for liquid flow calculation

Specific gravity of the most common fluids (ϒ = Kg/dm³) - (t = 15°C - P = 760 mm Hg)					
Acetone	0.76	**Benzenol**	0.90	**Naphtha**	0.76
Water	1.00	**Beer**	1.02	**Pentane**	0.63
Sea water	1.02	**Hexane**	0.66	**Vegetable oil**	0.92
Ethyl alcohol	0.79	**Ethane**	0.68	**Hydraulic oil**	0.92
Methyl alcohol	0.81	**Diesel oil**	0.70	**Wine**	0.95
Petrol	0.68	**Milk**	1.03		

FLOW RATE FOR GASES

The gas flow through a valve is given by:

$$Q = C \cdot P_1 \cdot k_T \cdot \omega \cdot \gamma_{air} / \gamma_{gas}$$

Where
- **Q** = Flow Rate **[dm³/s]**
- **C** = Conductance **[dm³/s.bar]**
- **P_1** = Inlet Pressure **[bar abs]**
- **γ** = Specific Weight **[Kg/dm³]**
- **k_T** = Temperature Correction Factor

$$\omega = \sqrt{1 - \frac{P_2/P_1 - b}{1 - b}} \qquad k_T = \sqrt{\frac{293}{273 + \text{Temp. °C}}}$$

Nominal Flow Qn:

Calculations can be made with specific flow factors based on the CETOP RP 50P standard.

For practical purposes and ease of valve selection the catalogue shows the nominal flow Qn.

The nominal flow Qn is defined as the flow rate (L/min) of air across the valve when the inlet pressure P_1 = 6 bar and the pressure drop ΔP = 1 bar.

N.B.
The values of the flow factors and flow rates mentioned in catalogues are subjet to +/-15% tolerances.

Pneumatic application: $\gamma_{air} / \gamma_{gas} = 1$

a) Choked flow conditions $P_2 \leq b.P_1$
in this case $\omega = 1$ --> $Q = C . P_1 . kT$

b) Free flow conditions $P_2 > b.P_1$
in this case --> $Q = C . P_1 . kT . \omega$

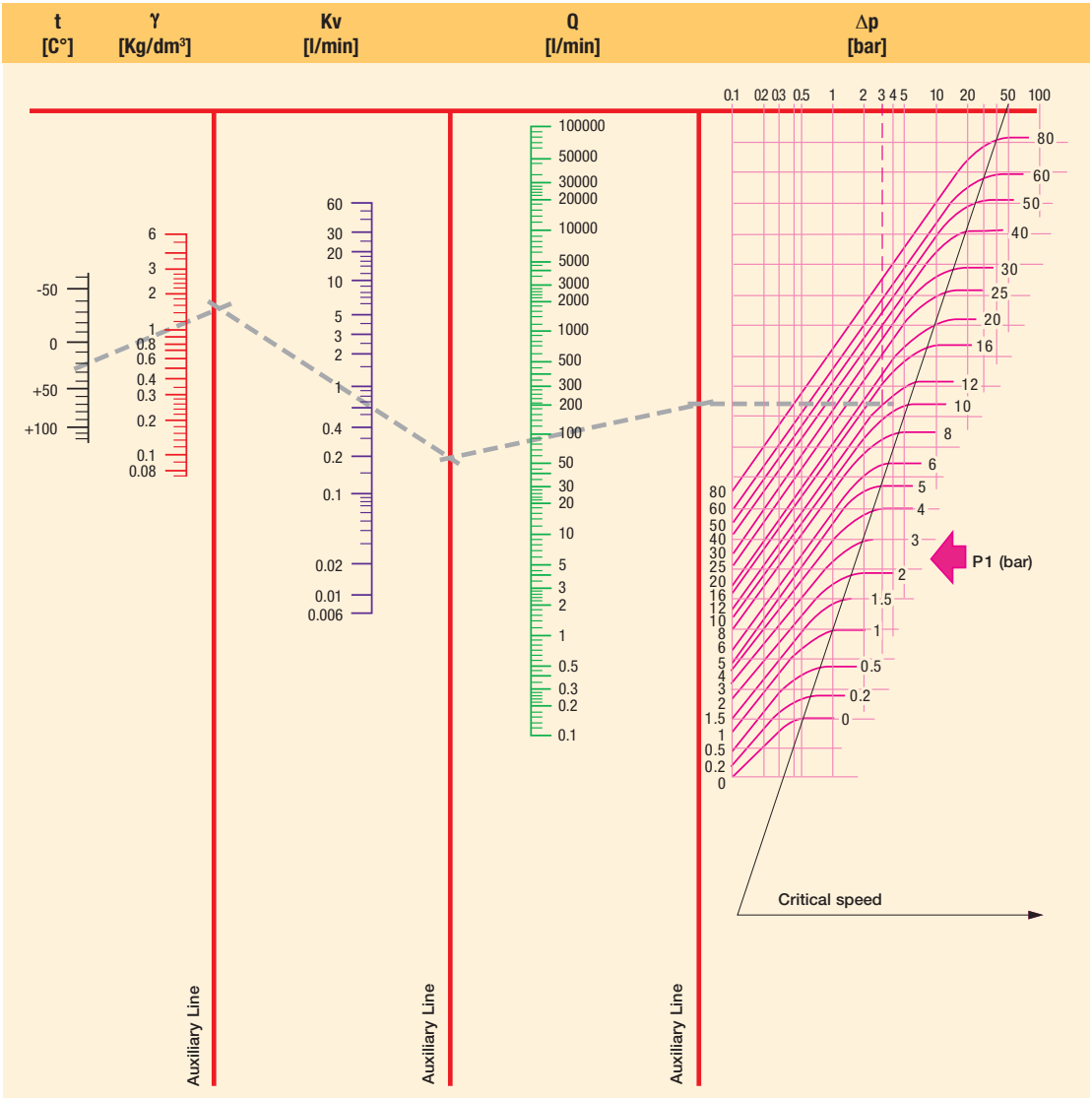

t = Fluid Temperature **γN** = Specific Gravity **Kv** = Flow Cœfficient **Qn** = Flow Rate **Δp** = Pressure Drop **P_1** = Inlet Pressure

Specific gravity of the most common gases (γ = Kg/m³) - (t = 0°C - P = 760mm Hg)					
Acetylene	1.176	**Helium**	0.179	**Natural gas**	0.723
Carbon dioxide	1.965	**Ethane**	1.035	**Methane**	0.722
Air	1.293	**Ethylene**	1.259	**Carbon monoxide**	1.250
Argon	1.780	**Hydrogen**	0.089	**Oxygen**	1.429
Nitrogen	1.255			**Propane**	1.520
Butane	2.000			**Steam**	0.805

TECHNICAL INFORMATION

Diagram 3 for Dry Satured Steam

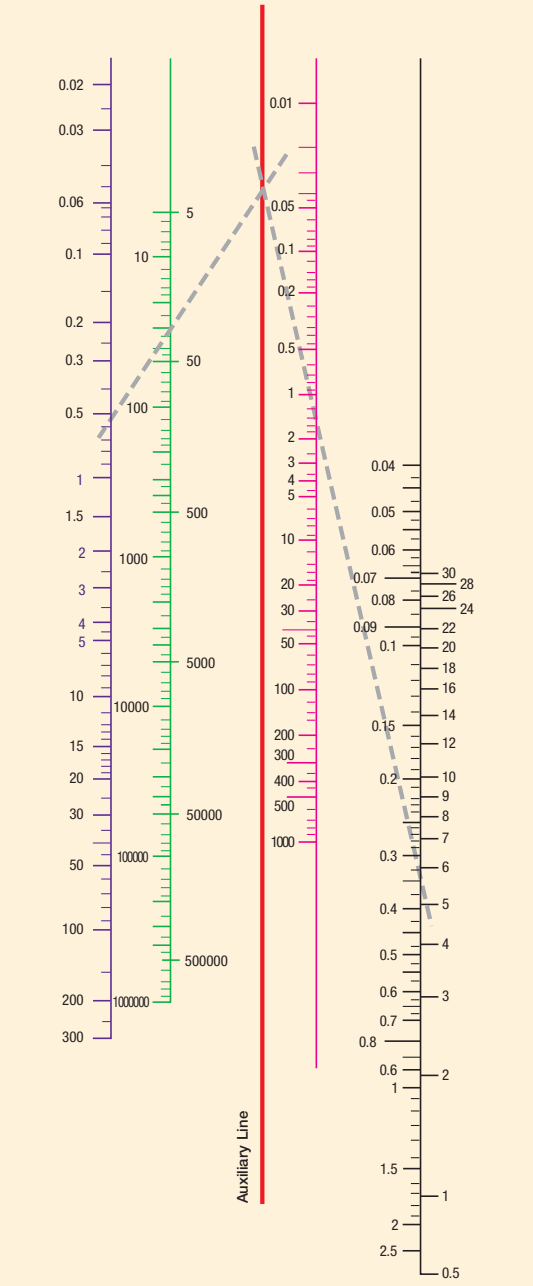

Steam (Dry Satured) Data

P_2 bar	Temp. °C	Vs m³/Kg	P_2 bar	Temp. °C	Vs m³/Kg
0.01	6.6	131.600	10.00	179.0	0.200
0.02	17.1	68.300	110.00	183.2	0.181
0.03	23.7	46.500	120.00	187.1	0.176
0.04	28.6	35.500	13.00	190.7	0.155
0.05	32.5	28.700	14.00	194.1	0.144
0.06	35.8	24.200	15.00	197.4	0.135
0.08	41.1	18.500	16.00	200.4	0.126
0.10	45.4	15.000	17.00	203.4	0.119
0.20	5 9.7	7.800	18.00	206.2	0.113
0.30	68.7	5.330	19.00	208.8	0.107
0.40	75.4	4.070	20.00	211.4	0.102
0.50	80.9	3.300	22.00	216.2	0.093
0.60	85.5	2.790	24.00	220.8	0.085
0.70	89.5	2.410	26.00	225.0	0.079
0.80	93.0	2.130	28.00	229.0	0.073
0.90	96.2	1.910	30.00	232.8	0.068
1.00	99.1	1.730	32.00	236.4	0.064
1.50	110.8	1.180	34.00	239.8	0.060
2.00	119.6	0.900	36.00	243.1	0.057
2.50	126.8	0.730	38.00	246.2	0.053
3.00	132.9	0.620	40.00	249.2	0.051
3.50	138.2	0.530	45.00	256.2	0.045
4.00	142.9	0.470	50.00	262.7	0.040
4.50	147.2	0.420	55.00	268.7	0.036
5.00	151.1	0.380	60.00	274.3	0.033
5.50	154.7	0.350	65.00	279.6	0.030
6.00	158.1	0.320	70.00	284.5	0.028
6.50	161.2	0.300	80.00	293.6	0.024
7.00	164.2	0.280	90.00	301.9	0.021
7.50	167.0	0.260	100.00	309.5	0.018
8.00	169.6	0.250	150.00	340.5	0.011
8.50	172.1	0.230	200.00	364.2	0.006
9.00	174.5	0.220	225.00	374.0	0.003
9.50	176.8	0.210			

Kv = Flow Coefficient **Qv** = Flow Rate **Δp** = Pressure Drop **Vs** = Specific Volume **P_2** = Outlet Pressure

VISCOSITY CONVERSION TABLE

Centistokes cStokes mm²/S	°Engler °E	Saybolt Universal Second SSU	Rewood Second N°1 SRW N°1
1	1	-	-
12	2	65	55
22	3	100	90
30	4	140	120
28	5	175	155
45	6	210	185
60	8	275	245
75	10	345	305
90	12	415	370
115	15	525	465
150	20	685	610
200	26	910	810
300	39	1 385	1 215
400	53	1 820	1 620
500	66	2 275	2 025
750	97	3 365	2 995
1 500	197	6 820	6 075

OTHER USEFUL FORMULAS

Formulas:

°C	=	(°F - 32) x 5/9
°F	=	(°C x 9/5) + 32
m³/h	=	l/min x 0.06
l/min	=	m³/h x 16,67
m³/sec	=	m³/h x 2,778 x 10^{-4}
m³/sec	=	l/min x 1,667 x 10^{-5}

Examples:

(**167°F**-32) x 5/9	=	**75°C**
(**30°C** x 9/5) + 32	=	**86°F**
100 l/min x 0.06	=	**6 m³/h**
9 m³/h x 16,67	=	**150 l/min**
18.000 m³/h x 2.778 x 10 -4	=	**5 m³/sec**
479.904 l/min x 1.667 x 10-5	=	**8 m³/sec**

TABLE OF SUB-BASES FOR VALVES (Examples)

This table is showing examples of existing Sub-bases and possible Valves associations.
For more detail see sub-bases drawings in the following pages.

Sub-Base Reference	488860.01 /.02/.03 /.04/.05	486162 /63/64	485635 /36/37	481168 /.04/.06 /.08/.10	481964.04 /.06/.08/.10	485291	485290	XGSPG1 /XGSPG2
Drawing	1	2	3	4	5	6	7	8
Valve Reference								
131F4480	●							
131F4480		●						
131F46		●						
131F4650		●						
131M74	●							
131M74	●							
131M7450	●							
131M7450	●							
131M75	●							
131M7550	●							
132F43		●						
132F44		●						
132F46		●						
133F46		●						
133F4650		●						
2019F1								●
3019F1								●
301XGR								●
341F34			●					
341F3403			●					
341L11					●			
341L2190							●	
341L9101				●				
345F34			●					
347L11					●			
E131F26								
E131F43		●						
E131F4350		●						
E131F44		●						
E131F4450		●						
E133F43		●						
E133F4350		●						
E133F44		●						
E133F4450		●						
E331L21						●		

TABLE OF SUB-BASES FOR VALVES (Examples)

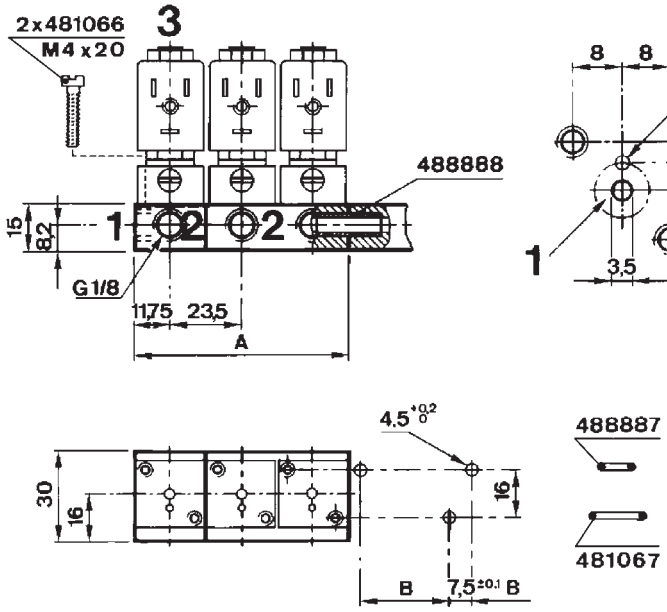

Drawing 1

Quantity of Valves by Assembly	Reference Numbers	A mm	B mm	Weight g
1	**488860-01**	23.5	16.0 ± 0.1	25
2	**488860-02**	47.0	39.5 ± 0.1	45
3	**488860-03**	70.5	63.0 ± 0.1	70
4	**488860-04**	94.0	86.5 ± 0.1	120
5	**488860-05**	117.5	110.0 ± 0.1	120

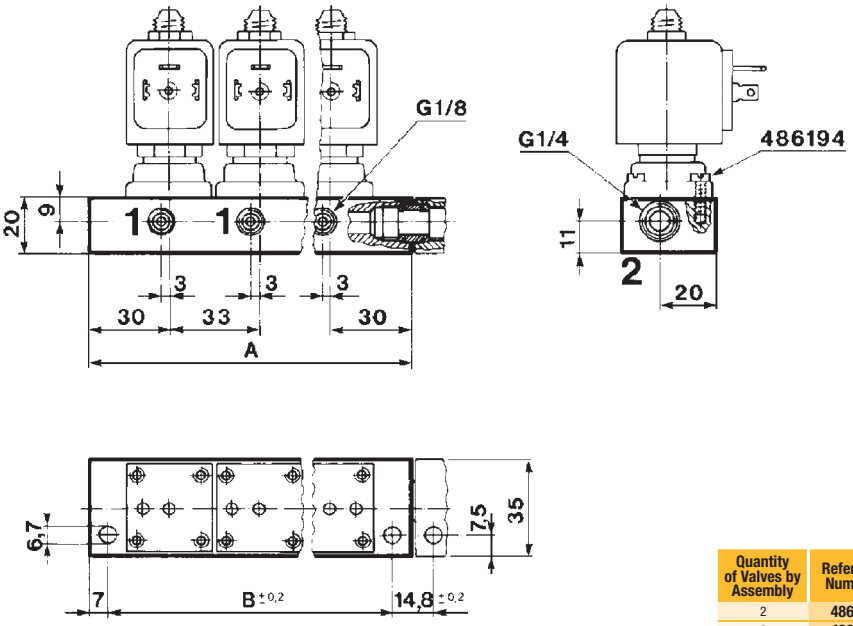

Drawing 2

Quantity of Valves by Assembly	Reference Numbers	A mm	B mm	Weight g
2	**486162**	93	79	150
3	**486163**	126	112	210
5	**486164**	192	178	420

TABLE OF SUB-BASES FOR VALVES (Examples)

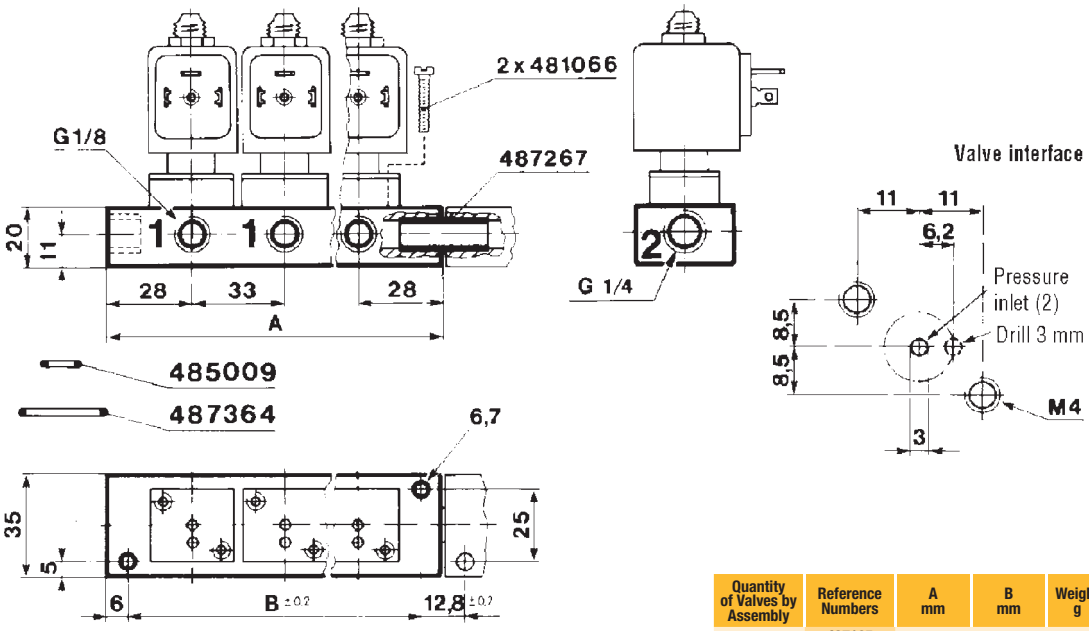

Drawing 3

Quantity of Valves by Assembly	Reference Numbers	A mm	B mm	Weight g
1	487165	56	44	85
2	487167	89	77	135
3	487169	188	176	300

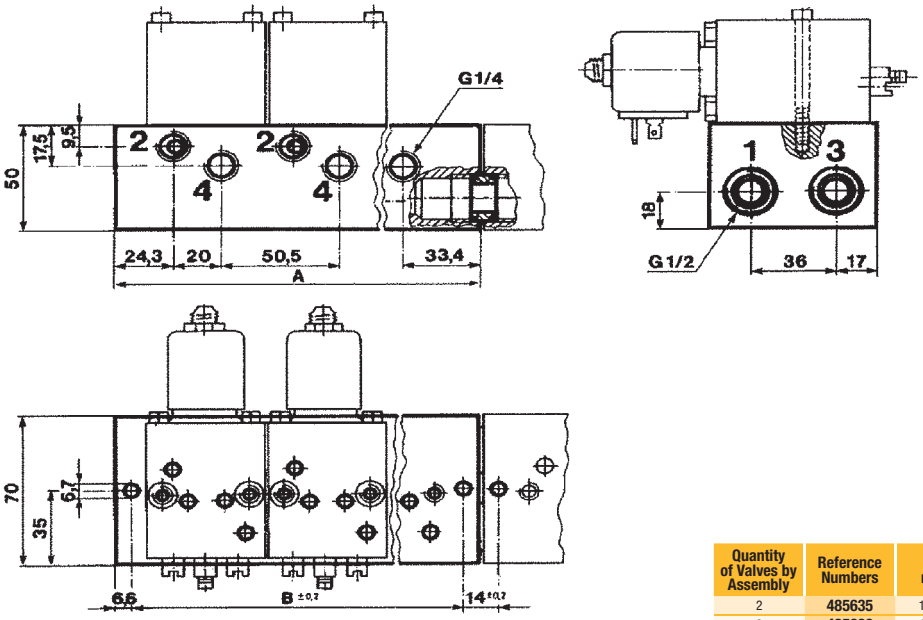

Drawing 4

Quantity of Valves by Assembly	Reference Numbers	A mm	B mm	Weight g
2	485635	128.2	115.0	1000
3	485636	178.7	165.5	1400
5	485637	279.7	266.5	2250

TABLE OF SUB-BASES FOR VALVES (Examples)

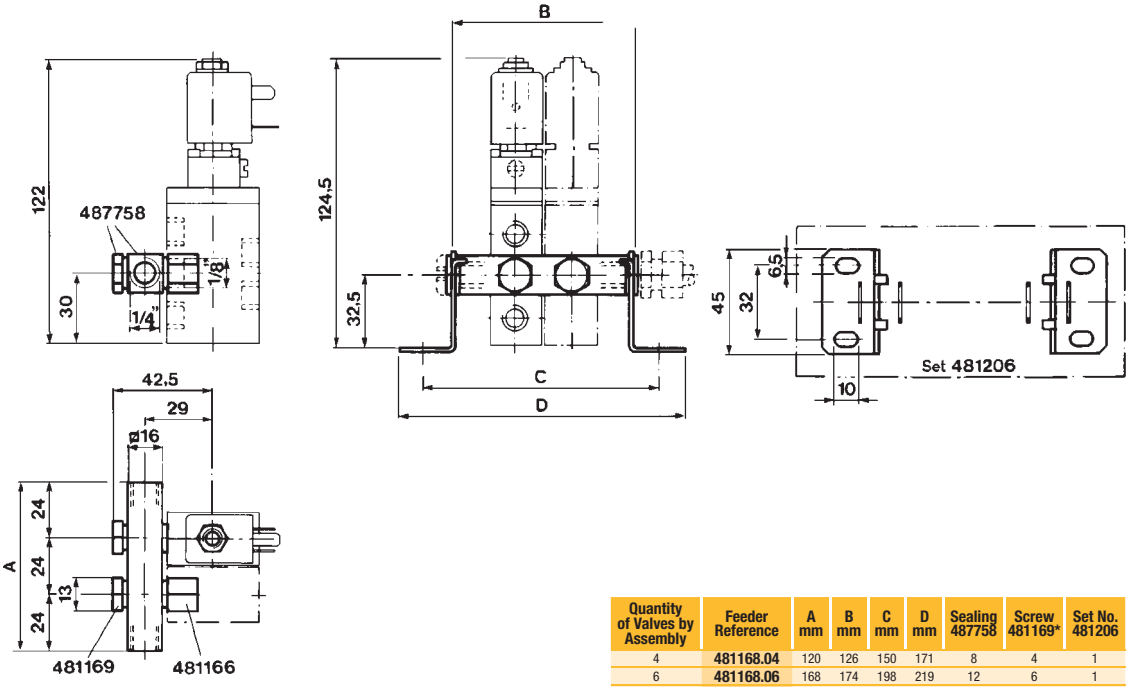

Drawing 5

Quantity of Valves by Assembly	Feeder Reference	A mm	B mm	C mm	D mm	Sealing 487758	Screw 481169*	Set No. 481206
4	**481168.04**	120	126	150	171	8	4	1
6	**481168.06**	168	174	198	219	12	6	1
8	**481168.08**	216	222	246	267	16	8	1
10	**481168.10**	264	270	294	315	20	10	1

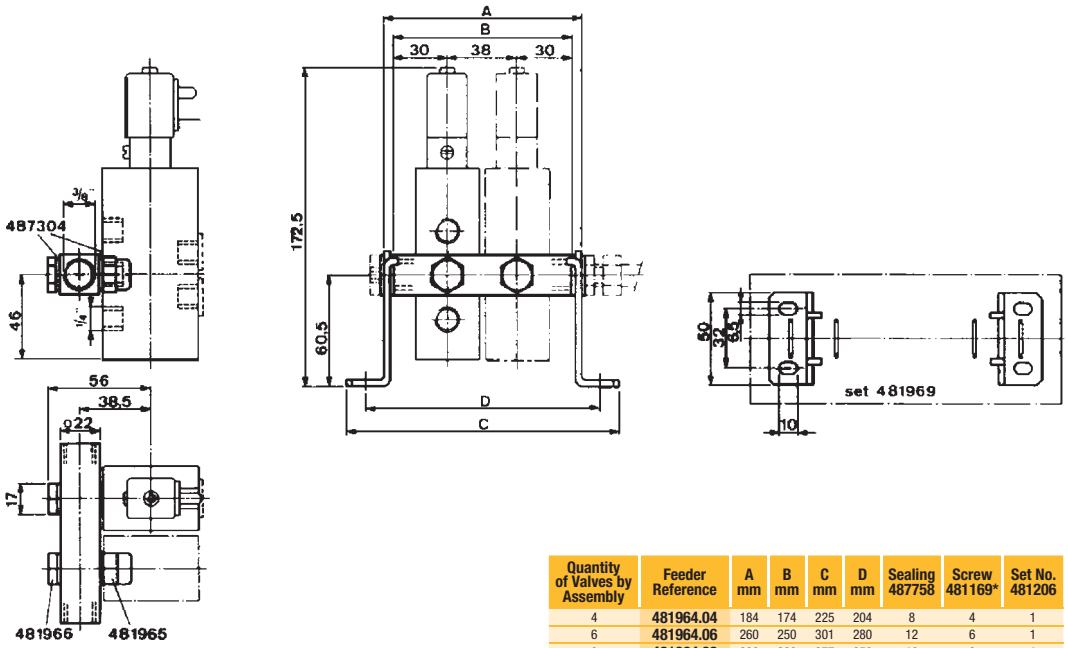

Drawing 6

Quantity of Valves by Assembly	Feeder Reference	A mm	B mm	C mm	D mm	Sealing 487758	Screw 481169*	Set No. 481206
4	**481964.04**	184	174	225	204	8	4	1
6	**481964.06**	260	250	301	280	12	6	1
8	**481964.08**	336	326	377	356	16	8	1
10	**481964.10**	412	402	453	432	20	10	1

TABLE OF SUB-BASES FOR VALVES (Examples)

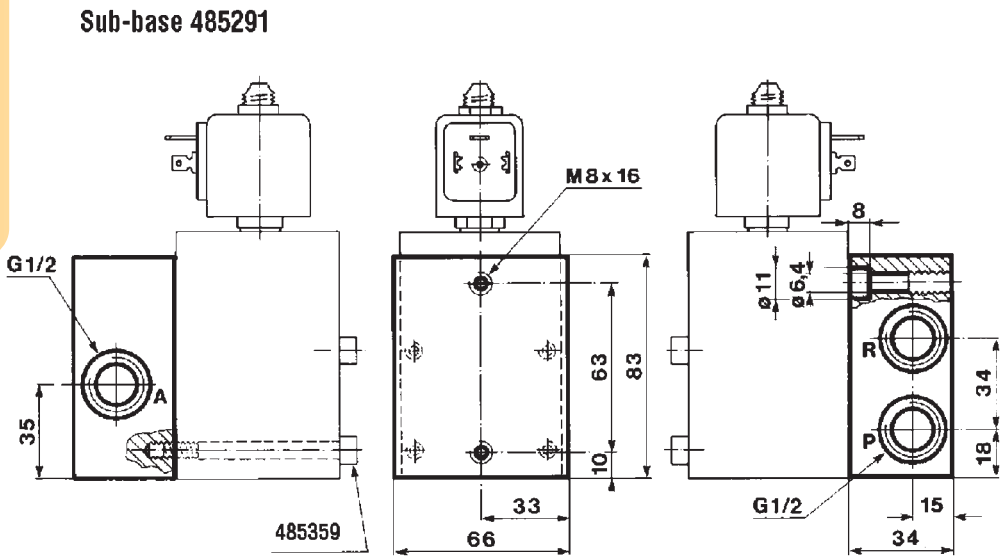

Drawing 7

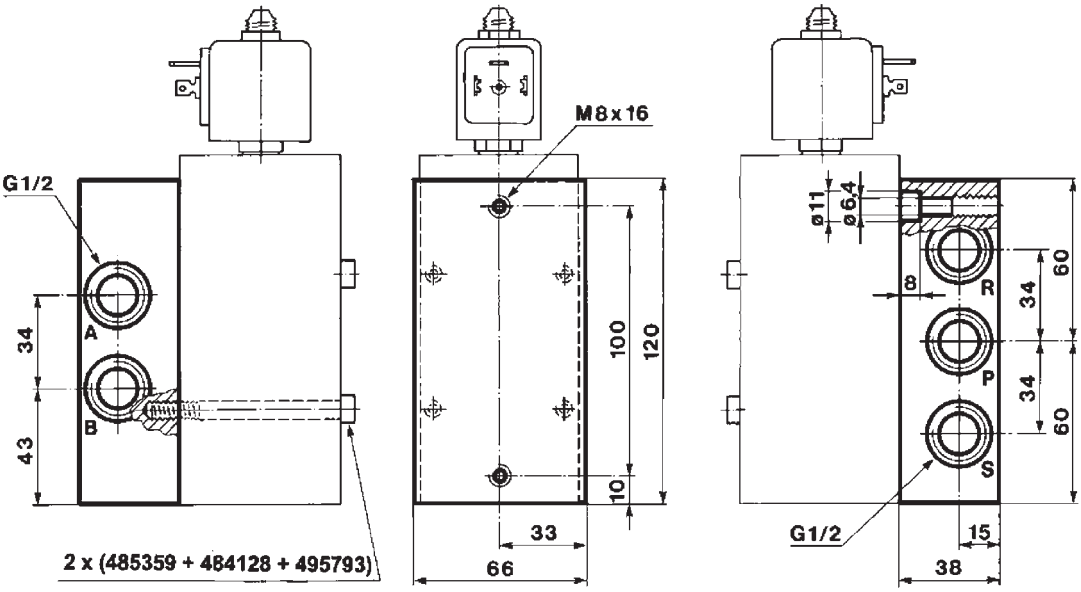

Drawing 8

TABLE OF SUB-BASES FOR VALVES (Examples)

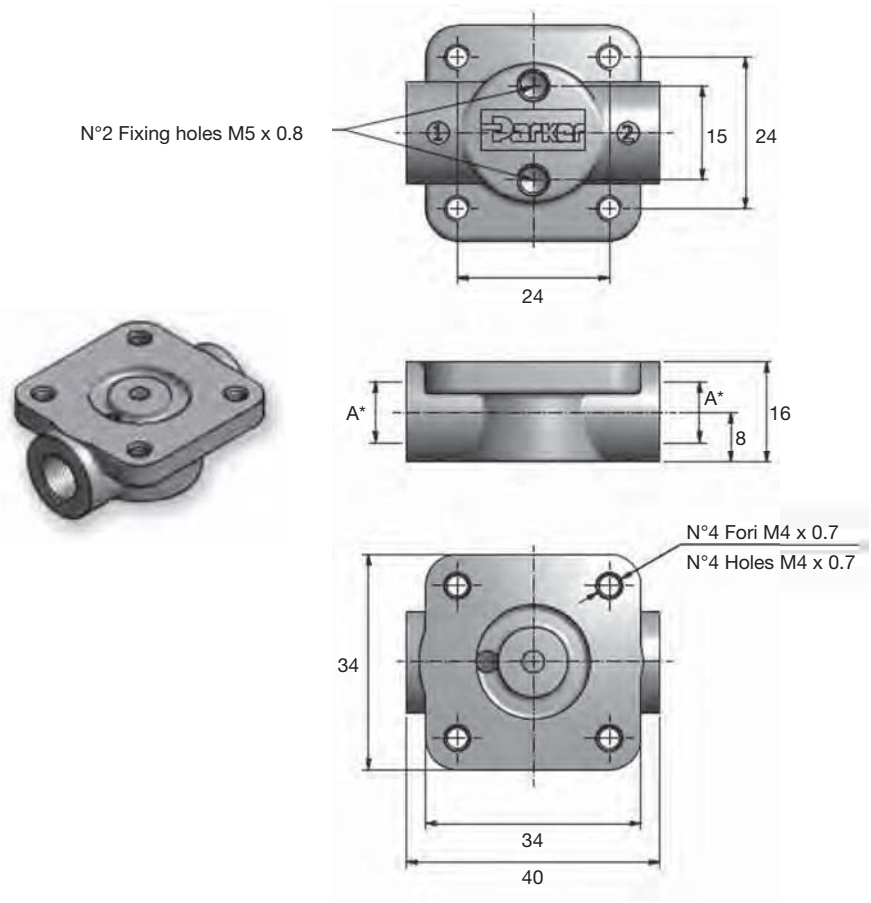

Drawing 9

Port	Kit Reference	To be used with	Box Quantity	Screws
1/8"G	XGSPG1	Any version	10	Included
1/4"G	XGSPG2	Any version	10	Included

TABLE OF VOLTAGE CODES FOR COILS AND ELECTRICAL PARTS

This table is showing the most commonly used voltage codes, for other voltages, please ask us.

VOLTAGE CODES			C1	C2	N7	L8	C4	C5		C7	E6	P1	A5	0A	S5	P2	1P	6J	0P	P3	K8
Coil	Group	Sub-Group	12 DC	24 DC	28 DC	30 DC	48 DC	110 DC	196 DC	220 DC	100/50	100/50-60	110/50	110-115/50	110-115/50 120/60	110/50-60	110-115/50-60	110-115/60	100/50-115/60	110/50-120/60	115/60
481045	1.1	-	●	●			●	●						●				●			
481180	1.1	-	●	●				●						●							
481530	1.1	-	●	●																	
482605	1.1	-	●	●																	
482606	1.1	-	●	●			●	●						●				●			
483590	1.1	-													●						
488143	1.1	-										●									
488980	1.1	-	●	●			●	●						●				●			
492912	1.1	-		●																	
492919	1.1	-		●																	
495865	1.1	-		●			●							●				●			
496131	1.2	-	●	●			●	●								●					●
496482	1.2	-	●	●			●	●								●					●
496637	1.2	-	●	●			●	●								●					●
WB4.5	1.3	-									●	●								●	
WB5.0	1.3	-	●	●				●													
WB8.0	1.3	-																		●	
481000	2.0	2.1	●	●			●	●		●				●				●			
481865	2.0	2.1	●	●			●	●					●								●
482635	2.0	2.1													●						
482725	2.0	2.1	●	●				●					●								●
483371	2.0	2.1	●	●			●	●		●				●				●			
483510	2.0	2.1													●						
483520	2.0	2.1																			
485100	2.0	2.1		●						●				●							
488553	2.0	2.1										●									
488947	2.0	2.1										●									
491514	2.0	2.1	●	●		●														●	
492070	2.0	2.1	●	●			●	●								●					
492190	2.0	2.1	●	●			●	●		●						●					
492453	2.0	2.1	●	●			●	●					●								
492670	2.0	2.1	●	●			●	●					●								
492726	2.0	2.1		●																	
493640	2.0	2.1		●			●						●							●	
494040	2.0	2.1		●						●				●							
495870	2.0	2.1		●			●	●					●								
495905	2.0	2.1		●			●	●													●
496081	2.0	2.1	●	●											●						
496082	2.0	2.1	●	●																●	
496110	2.0	2.1													●						
HZ10	2.0	2.1																		●	
481044	2.0	2.2											●						●		
483816	2.0	2.2	●	●																	
486265	2.0	2.2	●	●			●						●						●		
492425	2.0	2.2	●	●									●								
492727	2.0	2.2	●	●																	
495880	2.0	2.2		●									●								
496155	2.0	2.2		●			●						●								
HZ11	2.0	2.2	●	●			●													●	
482730	3.0	-		●			●						●								●
482735	3.0	-		●			●														
495875	3.0	2.1		●																	

A1	1W	P6	S2		U3	A7	B7	R5	3D	7J	3P	4K	Q3	S6	F4	J3	P9	A2	B2	P0	A8	B8	Q1	A9	Q2	5P	A4	S4
12/50	12/50-60	200/50-60	200-230/60	208-230/60	208-240/60	220/50	220/60	220/50-60	220-230/50	220-230/60	220-230/50-60	220-240/60	220/50-240/60	220-240/50	230/50	230/60	230/50-60	24/50	24/60	24/50-60	240/50	240/60	240/50-60	380/50	380/50-60	380/50-440/60	48/50	48/50-60
									●	●								●	●								●	
									●		●							●										
									●									●										
									●	●					●			●	●								●	
														●						●								●
		●																										
									●	●								●	●								●	
																				●								●
																												●
									●	●								●									●	
																	●			●								●
																	●			●								●
																	●			●								●
																	●			●								
●									●			●			●			●	●							●	●	
									●							●		●	●					●			●	
														●														
									●							●		●						●				
●									●			●						●	●								●	
	●													●						●								●
														●						●								
									●									●								●		
		●																										
		●																										
													●						●									
								●									●			●			●					
								●									●			●			●					●
									●									●						●			●	
															●			●				●					●	
									●									●										
													●		●				●									
									●									●								●		
									●									●								●		
															●			●				●					●	
														●						●		●						
					●								●						●									
														●						●								●
													●						●									
			●			●	●								●			●	●					●				
																		●										
			●			●	●								●			●						●				
															●			●										
															●			●										
															●			●										
															●			●										
													●		●			●	●									
									●																		●	
									●																		●	
									●																			

TABLE OF VOLTAGE CODES FOR COILS AND ELECTRICAL PARTS

This table is showing the most commonly used voltage codes, for other voltages, please ask us.

VOLTAGE CODES			C1	C2	N7	L8	C4	C5		C7	E6	P1	A5	0A	S5	P2	1P	6J	0P	P3	K8
Coil	Group	Sub-Group	12 DC	24 DC	28 DC	30 DC	48 DC	110 DC	196 DC	220 DC	100/50	100/50-60	110/50	110-115/50	110-115/50 120/60	110/50-60	110-115/50-60	110-115/60	100/50-115/60	110/50-120/60	115/60
484990	4.0	-										●					●				
485400	4.0	-	●	●			●	●													
495915	4.0	-		●			●										●				
482740	6.0	-		●			●	●													
482745	6.0	-		●																	
495900	6.0	-	●	●			●	●													●
496125	6.0	-		●			●	●													
483580.01	7.0	-			●																
488650.01	7.0	-			●																
488660.01	7.0	-			●																
488670.01	7.0	-			●																
490885	7.0	-				●															
490890	7.0	-			●	●															
495910	8.0	-			●																
492210	9.0	-		●																	
492965.01	9.0	-			●																
496565	9.0	-			●																
492300	10.1	-	●	●			●	●		●						●					
492310	10.1	-	●	●			●	●		●						●					
496560	10.1	-		●			●	●								●					
496800	10.1	-		●			●	●								●					
496800.02	10.1	-		●			●	●								●					
496895	10.1	-		●			●	●								●					
496555	10.2	-		●			●	●								●					
496700	10.2	-		●			●	●								●					
496700.02	10.2	-		●			●	●								●					
497105	10.3	-	●	●			●	●									●				
483270	11.0	-	●	●			●	●									●				
483270.02	11.0	-	●	●			●	●									●				
492335	12.0	-				●															
482870.01	12.0	-			●																
495294	13.0	-	●	●																	
496193	13.0	-	●	●																	
483824	14.1	-																			
483764	14.2	-																			
483541	14.3	-																			
YB09	20.1	-																●		●	
YB12	20.1	-	●	●																	
ZB09	20.1	-	●	●				●				●					●			●	
ZB12	20.1	-	●	●			●	●													
ZB14	20.2	-										●								●	
ZB16	20.2	-	●	●				●													
ZH14	20.2	-																		●	
ZH16	20.2	-	●	●																	
JB14	21.0	-																			
JB16	21.0	-	●	●					●												
KH09	22.0	-																			
KP10	22.0	-	●	●																	
KT09	22.0	-												●							
XT09	23.0	-																			
D4	24.0	-		●																●	
D5	24.0	-		●									●								●
LA	24.0	-		●																●	
LB-LC	24.0	-		●																●	
XS03	24.0	-																		●	

A1	1W	P6	S2		U3	A7	B7	R5	3D	7J	3P	4K	Q3	S6	F4	J3	P9	A2	B2	P0	A8	B8	Q1	A9	Q2	5P	A4	S4
12/50	12/50-60	200/50-60	200-230/60	208-230/60	208-240/60	220/50	220/60	220/50-60	220-230/50	220-230/60	220-230/50-60	220-240/60	220/50-240/60	220-240/50	230/50	230/60	230/50-60	24/50	24/60	24/50-60	240/50	240/60	240/50-60	380/50	380/50-60	380/50-440/60	48/50	48/50-60
		●									●									●								●
											●									●								●
															●			●				●					●		

INDEX BY COIL REFERENCE

Coil Reference	Coil Group	Designation	Power DC Pn (W)	Power AC Pn (W)	Ambient Temperature	UL	Degree of Protection	ATEX or NEMA 4X Protection (Gas)	Page
481000	2.0/2.1	Coil with screw terminal, 40 mm	8.0	8.0	-40°C to +50°C	-	IP 44 to 67	-	474
481044	2.0/2.2	Coil with screw terminal High power, 40 mm	-	14.0	-40°C to +50°C	-	IP 44 to 67	-	475
481180	1.1	Coil for DIN plug connection, 22 mm	5.0	4.0	-40°C to +50°C	-	IP65	-	453
481865	2.0/2.1	Coil for DIN plug connection, 32 mm	9.0	8.0	-40°C to +50°C	-	IP65	-	446
482605	1.1	Explosion proof encapsulated electrical part "mb", 32 mm	5.0	4.0	-40°C to +65°C	-	IP65	II 2 G Ex mb IIC T4/T5	494
482606	1.1	Explosion proof encapsulated electrical part "mb", low power, 32 mm	2.5	2.0	-40°C to +65°C	-	IP65	II 2 G Ex mb IIC T4/T5	494
482730	3.0	Coil for DIN plug connection, reduced power, 32 mm	7.0	6.0	-40°C to +50°C	-	IP65	-	448
482740	6.0	Coil for DIN plug connection, low power, 32 mm	1.6	-	-40°C to +50°C	-	IP65	-	449
482870.01	12.0	Explosion proof intrinsically safe electrical part "ia", 50 mm	3.0	-	-40°C to +65°C	-	IP66	II 1 G Ex ia IIC T6	512
483270	11.0	Flame proof electrical part "db", 50 mm	8.0	8.0	-40°C to +80°C	-	IP66	II 2 G Ex db IIC T4/T5/T6	492
483371	2.0/2.1	Explosion proof increased safety electrical part "eb", 50 mm	8.0	8.0	-40°C to +65°C	-	IP67	II 2 G Ex eb IIC T4	504
483510	2.0/2.1	Coil for DIN plug connection, 32 mm	-	9.0	-40°C to +50°C	-	IP65	-	446
483520	2.0/2.1	Coil with screw terminal, double frequency, 40 mm	-	9.0	-40°C to +50°C	-	IP 44 to 67	-	474
483541	14.3	Coil with screw terminal, high temperature-high power, 40 mm	20.0	20.0	-40°C to +50°C	-	IP 44 to 67	-	478
483580.01	7.0	Explosion proof intrinsically safe electrical part "ia", 32 mm	3.0	-	-40°C to +55°C	-	IP65	II 1 G Ex ia IIC T6	508
483590	1.1	Coil for DIN plug connection,double frequency, 22 mm	-	3.0	-40°C to +50°C	-	IP65	-	455
483764	14.2	Coil for DIN plug connection, UL recognized	-	9.0	-40°C to +50°C	-	IP65	-	451
483816	2.2	Coil for DIN plug connection for Jet Valves, 32 mm	14.0	14.0	-40°C to +50°C	-	IP65	-	452
483824	14.1	Coil with screw terminal, high temperature-high power, 40 mm	19.0	19.0	-40°C to +50°C	-	IP 44 to 67	-	477
484990	4.0	Coil with screw terminal,bistable,for impulse applications, 40 mm	-	11.0	-40°C to +50°C	-	IP44	-	480
485100	2.0/2.1	Coil with screw terminal,high temperature, 40 mm	8.0	8.0	-40°C to +50°C	-	IP 44 to 67	-	476
485400	4.0	Coil with screw terminal,bistable,for impulse applications, 40 mm	13.0	-	-40°C to +50°C	-	IP44	-	480
486265	2.0/2.2	Coil with screw terminal,high temperature-high power, 40 mm	14.0	14.0	-40°C to +50°C	-	IP 44 to 67	-	476
488143	1.1	Coil for DIN plug connection,double frequency, 22 mm	-	2.5	-40°C to +50°C	-	IP65	-	456
488553	2.0/2.1	Coil with screw terminal,double frequency, H class, 40 mm	-	9.0	-40°C to +50°C	-	IP 44 to 67	-	479
488650.01	7.0	Explosion proof intrinsically safe electrical part "ia", 50 mm	0.3 to 3.0	-	-40°C to +65°C	-	IP66	II 1 G Ex ia IIC T6	513
488660.01	7.0	Explosion proof intrinsically safe electrical part "ia", 50 mm	3.0	-	-40°C to +65°C	-	IP67	II 1 G Ex ia IIC T6	514
488670.01	7.0	Explosion proof intrinsically safe electrical part "ia", 50 mm	0.3 to 3.0	-	-40°C to +65°C	-	IP65	II 1 G Ex ia IIC T6	515
488980	1.1	Coil for DIN plug connection, low power, 22 mm	2.5	2.0	-40°C to +50°C	-	IP65	-	453
490885	7.0	Explosion proof intrinsically safe electrical part, "NEMA", 50 mm	3.0	-	-40°C to +60°C	-	NEMA 4 - 4X	Cl. I, Div.I, Gr. A, B, C, D	513
490890	7.0	Explosion proof intrinsically safe electrical part, "NEMA", 50 mm	3.0	-	-40°C to +60°C	-	NEMA 4 - 4X	Cl. I, Div.I, Gr. A, B, C, D	514
491514	2.0/2.1	Coil for DIN plug connection, 32 mm, UL class F	-	11.0	-40°C to +50°C	●	IP65	-	450
492070	2.0/2.1	Explosion proof encapsulated electrical part "mb", with water proof metal housing, 50mm	8.0	9.0	-40°C to +65°C	-	IP67	II 2 G Ex mb IIC T4/T5	496
492190	2.0/2.1	Explosion proof increased safety and encapsulated electrical part "eb", 50 mm	9.0	11.0	-40°C to +75°C	-	IP66	II 2 G Ex eb mb IIC T3/T4	507
492210	9.0	Explosion proof increased safety and encapsulated electrical part "eb", "Booster", 50 mm	1.0 to 1.8	-	-40°C to +75°C	-	IP66	II 2 G Ex eb mb IIC T5/T6	506
492310	10.1	Explosion proof increased safety and encapsulated electrical part "eb", 50 mm	6.0	6.0	-40°C to +75°C	-	IP66	II 2 G Ex eb mb IIC T4/T5	505
492335	12.0	Explosion proof intrinsically safe electrical part, "NEMA", 50 mm	3.0	-	-40°C to +60°C	-	NEMA 4 - 4X	Cl. I, Div.I, Gr. A, B, C, D	512
492425	2.0/2.2	Coil for DIN plug connection, high temperature, 32 mm	14.0	14.0	-40°C to +50°C	-	IP65	-	447
492453	2.0/2.1	Coil for DIN plug connection, high temperature, 32 mm	9.0	8.0	-40°C to +50°C	-	IP65	-	447
492670	2.0/2.1	Explosion proof encapsulated electrical part "mb", 32 mm	9.0	8.0	-40°C to +50°C	-	IP65	II 2 G Ex mb IIC T4	495
492912	1.1	Coil for DIN plug connection, 22 mm, UL	4.0	3.0	-40°C to +50°C	●	IP65	-	454
492965.01	9.0	Explosion proof intrinsically safe electrical part "ia", " Booster", 50 mm	0.3 to 2.3	-	-40°C to +65°C	-	IP66	II 1 G Ex ia IIC T6	511
493640	2.0/2.1	Flame proof encapsulated electrical part "db mb", double frequency	8.0	8.0	-40°C to +75°C	-	IP65	II 2 G Ex db mb IIC T4/T5	503
494040	2.0/2.1	Explosion proof increased safety electrical part "eb", 50 mm	8.0	8.0	-40°C to +90°C	-	IP67	II 2 G Ex eb IIC T3/T4	504
495294	13.0	Coil with ISO-DIN connector, 12-24VDC for transportation applications, 32 mm	9.0	-	-40°C to +120°C	-	IP69K	-	481
495865	1.1	Explosion proof electrical part "nAc nCc", low power, 22 mm	2.5	2.0	-40°C to +50°C	-	IP65	II 3 G Ex nAc nCc IIC T5	484
495870	2.0/2.1	Explosion proof electrical part "nAc nCc", 32 mm	9.0	8.0	-40°C to +50°C	-	IP65	II 3 G Ex nAc nCc IIC T3/T4	486

INDEX BY COIL REFERENCE

Coil Reference	Coil Group	Designation	Power DC Pn (W)	Power AC Pn (W)	Ambient Temperature	UL	Degree of Protection	ATEX or NEMA 4X Protection (Gas)	Page
495875	3.0	Explosion proof electrical part "nAc nCc", 32 mm	7.0	6.0	-40°C to +50°C	-	IP65	II 3 G Ex nAc nCc IIC T3/T4	488
495880	2.0/2.2	Explosion proof electrical part "nAc nCc", 32 mm	14.0	14.0	-40°C to +50°C	-	IP65	II 3 G Ex nAc nCc IIC T3	489
495900	6.0	Flame proof encapsulated electrical part "db mb", low power, 37 mm	2.0	2.5	-40°C to +65°C	-	IP67	II 2 G Ex db mb IIC T4 / T5/T6	499
495905	2.0/2.1	Flame proof encapsulated electrical part "db mb", 37 mm	8.0	8.0	-40°C to +65°C	-	IP67	II 2 G Ex db mb IIC T4	500
495910	8.0	Explosion proof intrinsically safe electrical part "ia", "booster", 37 mm	0.3 to 1.2	-	-40°C to +80°C	-	IP67	II 1 G Ex ia IIC T4/T5/T6	509
495915	4.0	Explosion proof increased safety electrical part "nAc nCc", 50 mm	13.0	11.0	-40°C to +65°C	-	IP67	II 3 G Ex nAc nCc IIC T3	490
496081	2.0/2.1	Coil with flying leads,IP 67, 32 mm	9.0	9.0	-40°C to +50°C		IP67	-	472
496082	2.0/2.2	Coil with flying leads, IP 67, 32 mm, UL	16.0	13.0-14.0	-40°C to +120°C	●	IP67	-	473
496110	2.0/2.1	Explosion proof electrical part "nAc nCc", 32 mm	-	9.0	-40°C to +50°C	-	IP65	II 3 G Ex nAc nCc IIC T3/T4	486
496125	6.0	Explosion proof electrical part "nAc nCc", low power, 32 mm	1.6	-	-40°C to +50°C	-	IP65	II 3 G Ex nAc nCc IIC T5/T6	487
496131	1.2	Coil for DIN plug connection, double frequency, 22 mm	3.0	3.0	-40°C to +50°C	-	IP65	-	457
496155	2.0/2.2	Explosion proof increased safety electrical part "nAc nCc", 50 mm	14.0	14.0	-40°C to +65°C	-	IP67	II 3 G Ex nAc nCc IIC T3	491
496193	13.0	Coil with ISO-DIN connector, 12-24VDC, for transportation applications, 32 mm	9.0	-	-40°C to +120°C	-	IP69K	-	481
496482	1.2	Coil for DIN plug connection, double frequency coil, 22 mm	3.0	3.0	-40°C to +50°C	-	IP65	-	458
496555	10.2	Flame proof encapsulated electrical part "db mb", 37 mm	6.0	6.0	-40°C to +65°C	-	IP67	II 2 G Ex db mb IIC T4/T5/T6	501
496560	10.1	Flame proof encapsulated electrical part "db mb", 37 mm	8.0	8.0	-40°C to +65°C	-	IP67	II 2 G Ex db mb IIC T4	501
496565	9.0	Explosion proof intrinsically safe electrical part "ia", " Booster", 37 mm	0.77 to 2.58	-	-40°C to +80°C	-	IP67	II 1 G Ex ia IIC T4/T5/T6	510
496637	1.2	Explosion proof electrical part "nAc nCc", double frequency, 22 mm	3.0	3.0	-20°C to +50°C	-	IP65	II 3 D Ex TC IIIC T 95°C	485
496700	10.2	Flame proof encapsulated electrical part "db mb", 37 mm	6.0	6.0	-40°C to +65°C	-	IP67	II 2 G Ex db mb IIC T4 / T5 / T6	502
496800	10.1	Flame proof encapsulated electrical part "db mb", 37 mm	8.0	8.0	-40°C to +65°C	-	IP67	II 2 G Ex db mb IIC T4	502
496895	10.1	Coil for DIN plug connection for oil and gas, 37 mm	8.0	8.0	-40°C to +50°C	-	IP65	-	468
497105	10.3	Flame proof stainless steel electrical part "db"	8.0	8.0	-50°C to +80°C	-	IP66	II 2 G Ex db IIC T4/T5/T6	493
D4	24.0	Coil for DIN plug connection, 32 mm, UL	16.0	13.0	-40°C to +50°C	●	IP65	-	465
D5	24.0	Coil for DIN plug connection, 32 mm	9.0	8.0	-40°C to +50°C	-	IP65	-	466
HZ10	2.0/2.1	Explosion proof encapsulated electrical part "mb", double frequency	8.0	8.0	-40°C to +85°C	-	IP65	II 2 G Ex mb IIC T3/T4/T5	497
HZ11	2.0/2.2	Explosion proof encapsulated electrical part "mb", double frequency	14.0	14.0	-40°C to +85°C	-	IP65	II 2 G Ex mb IIC T3/T4/T5	498
JB14	21.0	Coil for DIN plug connection	16.0	-	-10°C to +50°C	-	IP65	-	462
JB16	21.0	Coil for DIN plug connection	-	14.0	-10°C to +50°C	-	IP65	-	462
KH09	22.0	Coil for DIN plug connection	-	9.0	-10°C to +80°C	-	IP65	-	463
KT09	22.0	Coil for DIN plug connection	-	9.0	-10°C to +50°C	-	IP65	-	463
KT10	22.0	Coil for DIN plug connection	10.0	-	-10°C to +50°C	-	IP65	-	463
LA	24.0	Coil with flying leads, IP67, 32 mm	9.0	9.0	-10°C to +50°C	-	IP67	-	470
LB-LC	24.0	Coil with flying leads, 32 mm, UL	16.0	13.0-14.0	-10°C to +50°C	●	IP67	-	471
WB4.5	1.3	Coil for DIN plug connection, 22 mm	-	4.5	-10°C to +50°C	-	IP65	-	459
WB4.5 UR	1.3	Coil for DIN plug connection, 22 mm	-	4.5	-10°C to +50°C	●	IP65	-	459
WB5.0	1.3	Coil for DIN plug connection, 22 mm	5.0	-	-10°C to +50°C	-	IP65	-	459
WB5.0 cURus	1.3	Coil for DIN plug connection, 22 mm	5.0	-	-10°C to +50°C	●	IP65	-	459
WB8.0	1.3	Coil for DIN plug connection, 22 mm	-	8.0	-10°C to +50°C	-	IP65	-	459
XS03	24.0	Coil for DIN plug connection, 32 mm	-	9.0	-40°C to +50°C	-	IP65	-	467
XT09	23.0	Coil for DIN plug connection	-	9.0	-10°C to +50°C	-	IP54	-	464
YB09	20.1	Coil with flying leads, IP67, UL for AC	-	9.0	-10°C to +50°C	●	IP67	-	469
YB12	20.1	Coil with flying leads, IP67	12.0	-	-10°C to +50°C	-	IP67	-	469
ZB09	20.0	Coil for DIN plug connection, UL for AC	-	9.0	-10°C to +50°C	●	IP65	-	460
ZB12	20.0	Coil for DIN plug connection	12.0	-	-10°C to +50°C	-	IP65	-	460
ZB14	20.2	Coil for DIN plug connection, high power - high temperature series	-	14.0	-10°C to +50°C	-	IP65	-	461
ZB16	20.2	Coil for DIN plug connection, high power - high temperature series	16.0	-	-10°C to +50°C	-	IP65	-	461
ZH14	20.2	Coil for DIN plug connection, high power - high temperature series	-	14.0	-10°C to +80°C	-	IP65	-	461
ZH16	20.2	Coil for DIN plug connection, high power - high temperature series	16.0	-	-10°C to +80°C	-	IP65	-	461

INDEX BY COIL GROUP

Coil Group	Coil Reference	Designation	Power DC Pn (W)	Power AC Pn (W)	Ambient Temperature	UL	Degree of Protection	ATEX or NEMA 4X Protection (Gas)	Page
1.1	488980	Coil for DIN plug connection, low power,22 mm	2.5	2.0	-40°C to +50°C	-	IP65	-	453
1.1	492912	Coil for DIN plug connection, UL 22 mm	4.0	3.0	-40°C to +50°C	●	IP65	-	454
1.1	481180	Coil for DIN plug connection, 22 mm	5.0	4.0	-40°C to +50°C	-	IP65	-	453
1.1	488143	Coil for DIN plug connection,double frequency, 22 mm	-	2.5	-40°C to +50°C	-	IP65	-	456
1.1	483590	Coil for DIN plug connection,double frequency, 22 mm	-	3.0	-40°C to +50°C	-	IP65	-	455
1.1	495865	Explosion proof electrical part "nAc nCc", low power, 22 mm	2.5	2.0	-40°C to +50°C	-	IP65	II 3 G Ex nAc nCc IIC T5	484
1.1	482606	Explosion proof encapsulated electrical part "mb", low power, 32 mm	2.5	2.0	-40°C to +65°C	-	IP65	II 2 G Ex mb IIC T4/T5	494
1.1	482605	Explosion proof encapsulated electrical part "mb", 32 mm	5.0	4.0	-40°C to +65°C	-	IP65	II 2 G Ex mb IIC T4/T5	494
1.2	496131	Coil for DIN plug connection, double frequency, 22 mm	3.0	3.0	-40°C to +50°C	-	IP65	-	457
1.2	496482	Coil for DIN plug connection,double frequency coil, 22 mm	3.0	3.0	-40°C to +50°C	-	IP65	-	458
1.2	496637	Explosion proof electrical part "nAc nCc", 22 mm, double frequency	3.0	3.0	-20°C to +50°C	-	IP65	II 3 D Ex tc IIC T 95°C	485
1.3	WB5.0	Coil for DIN plug connection, 22 mm	5.0	-	-10°C to +50°C	-	IP65	-	459
1.3	WB5.0 cURus	Coil for DIN plug connection, 22 mm	5.0	-	-10°C to +50°C	●	IP65	-	459
1.3	WB4.5	Coil for DIN plug connection, 22 mm	-	4.5	-10°C to +50°C	-	IP65	-	459
1.3	WB4.5 UR	Coil for DIN plug connection, 22 mm	-	4.5	-10°C to +50°C	●	IP65	-	459
1.3	WB8.0	Coil for DIN plug connection, 22 mm	-	8.0	-10°C to +50°C	-	IP65	-	459
2.0/2.1	481000	Coil with screw terminal, 40 mm	8.0	8.0	-40°C to +50°C	-	IP 44 to 67	-	474
2.0/2.1	485100	Coil with screw terminal,high temperature, 40 mm	8.0	8.0	-40°C to +50°C	-	IP 44 to 67	-	476
2.0/2.1	481865	Coil for DIN plug connection, 32 mm	9.0	8.0	-40°C to +50°C	-	IP65	-	446
2.0/2.1	492453	Coil for DIN plug connection, high temperature, 32 mm	9.0	8.0	-40°C to +50°C	-	IP65	-	447
2.0/2.1	496081	Coil with flying leads, IP 67, 32 mm	9.0	9.0	-10°C to +50°C	-	IP67	-	472
2.0/2.1	483510	Coil for DIN plug connection, 32 mm	-	9.0	-40°C to +50°C	-	IP65	-	446
2.0/2.1	483520	Coil with screw terminal, double frequency, 40 mm	-	9.0	-40°C to +50°C	-	IP 44 to 67	-	474
2.0/2.1	488553	Coil with screw terminal,double frequency, H class, 40 mm	-	9.0	-40°C to +50°C	-	IP 44 to 67	-	479
2.0/2.1	491514	Coil for DIN plug connection, 32 mm, UL	-	11.0	-40°C to +50°C	●	IP65	-	450
2.0/2.1	495870	Explosion proof electrical part "nAc nCc", 32 mm	9.0	8.0	-40°C to +50°C	-	IP65	II 3 G Ex nAc nCc IIC T3/T4	486
2.0/2.1	496110	Explosion proof electrical part "nAc nCc", 32 mm	-	9.0	-40°C to +50°C	-	IP65	II 3 G Ex nAc nCc IIC T3/T4	486
2.0/2.1	492670	Explosion proof encapsulated electrical part "mb", 32 mm	9.0	8.0	-40°C to +50°C	-	IP65	II 2 G Ex mb IIC T4	495
2.0/2.1	492070	Explosion proof encapsulated electrical part "mb", with water proof metal housing, 50 mm	8.0	9.0	-40°C to +65°C	-	IP67	II 2 G Ex mb IIC T4/T5	496
2.0/2.1	493640	Flame proof encapsulated electrical part "db mb", double frequency	8.0	8.0	-40°C to +75°C	-	IP65	II 2 G Ex db mb IIC T4/T5	503
2.0/2.1	495905	Flame proof encapsulated electrical part "db mb", 37 mm	8.0	8.0	-40°C to +65°C	-	IP67	II 2 G Ex db mb IIC T4	500
2.0/2.1	494040	Explosion proof increased safety electrical part "eb", 50 mm	8.0	8.0	-40°C to +90°C	-	IP67	II 2 G Ex eb IIC T3/T4	504
2.0/2.1	483371	Explosion proof increased safety electrical part "eb", 50 mm	8.0	8.0	-40°C to +65°C	-	IP67	II 2 G Ex eb IIC T4	504
2.0/2.1	492190	Explosion proof increased safety and encapsulated electrical part "eb", 50 mm	9.0	11.0	-40°C to +75°C	-	IP66	II 2 G Ex eb mb IIC T3/T4	507
2.0/2.1	HZ10	Explosion proof encapsulated electrical part "mb", double frequency	8.0	8.0	-40°C to +85°C	-	IP65	II 2 G Ex mb IIC T3/T4/T5	497
2.0/2.2	486265	Coil with screw terminal,high temperature-high power, 40 mm	14.0	14.0	-40°C to +50°C	-	IP 44 to 67	-	476
2.0/2.2	492425	Coil for DIN plug connection, high temperature, 32 mm	14.0	14.0	-40°C to +50°C	-	IP65	-	447
2.0/2.2	481044	Coil with screw terminal High power, 40 mm	-	14.0	-40°C to +50°C	-	IP 44 to 67	-	475
2.0/2.2	495880	Explosion proof electrical part "nAc nCc", 32 mm	14.0	14.0	-40°C to +50°C	-	IP65	II 3 G Ex nAc nCc IIC T3	489
2.0/2.2	496082	Coil with flying leads,IP 67, 32 mm, UL	16.0	13.0-14.0	-40°C to +120°C	●	IP67	-	473
2.0/2.2	496155	Explosion proof increased safety electrical part "nAc nCc", 50 mm	14.0	14.0	-40°C to +65°C	-	IP67	II 3 G Ex nAc nCc IIC T3	491
2.0/2.2	HZ11	Explosion proof encapsulated electrical part "mb", double frequency	14.0	14.0	-40°C to +85°C	-	IP65	II 2 G Ex mb IIC T3/T4/T5	498
2.2	483816	Coil for DIN plug connection for Jet Valves, 32 mm	14.0	14.0	-40°C to +50°C	-	IP65	-	452
3.0	482730	Coil for DIN plug connection, reduced power, 32 mm	7.0	6.0	-40°C to +50°C	-	IP65	-	448
3.0	495875	Explosion proof electrical part "nAc nCc", 32 mm	7.0	6.0	-40°C to +50°C	-	IP65	II 3 G Ex nAc nCc IIC T3/T4	488
4.0	485400	Coil with screw terminal,bistable, for impulse applications, 40 mm	13.0	-	-40°C to +50°C	-	IP44	-	480
4.0	484990	Coil with screw terminal,bistable, for impulse applications, 40 mm	-	11.0	-40°C to +50°C	-	IP44	-	480
4.0	495915	Explosion proof increased safety electrical part "nAc nCc", 50 mm	13.0	11.0	-40°C to +65°C	-	IP67	II 3 G Ex nAc nCc IIC T3	490

INDEX BY COIL GROUP

Coil Group	Coil Reference	Designation	Power DC Pn (W)	Power AC Pn (W)	Ambient Temperature	UL	Degree of Protection	ATEX or NEMA 4X Protection (Gas)	Page
6.0	482740	Coil for DIN plug connection, low power, 32 mm	1.6	-	-40°C to +50°C	-	IP65	-	449
6.0	496125	Explosion proof electrical part "nAc nCc", low power, 32 mm	1.6	-	-40°C to +50°C	-	IP65	II 3 G Ex nAc nCc IIC T5/T6	487
6.0	495900	Flame proof encapsulated electrical part "db mb", low power, 37 mm	2.0	2.5	-40°C to +65°C	-	IP67	II 2 G Ex db mb IIC T4 / T5/T6	499
7.0	483580.01	Explosion proof intrinsically safe electrical part "ia", 32 mm	3.0	-	-40°C to +55°C	-	IP65	II 1 G Ex ia IIC T6	508
7.0	488660.01	Explosion proof intrinsically safe electrical part "ia", 50 mm	3.0	-	-40°C to +65°C	-	IP67	II 1 G Ex ia IIC T6	514
7.0	488650.01	Explosion proof intrinsically safe electrical part "ia", 50 mm	0.3 to 3.0	-	-40°C to +65°C	-	IP66	II 1 G Ex ia IIC T6	513
7.0	488670.01	Explosion proof intrinsically safe electrical part "ia", 50 mm	0.3 to 3.0	-	-40°C to +65°C	-	IP65	II 1 G Ex ia IIC T6	515
7.0	490885	Explosion proof intrinsically safe electrical part, "NEMA", 50 mm	3.0	-	-40°C to +60°C	-	NEMA 4 - 4X	Cl. I, Div.I, Gr. A, B, C, D	513
7.0	490890	Explosion proof intrinsically safe electrical part, "NEMA", 50 mm	3.0	-	-40°C to +60°C	-	NEMA 4 - 4X	Cl. I, Div.I, Gr. A, B, C, D	514
8.0	495910	Explosion proof intrinsically safe electrical part "ia", "booster", 37 mm	0.3 to 1.2.0	-	-40°C to +80°C	-	IP67	II 1 G Ex ia IIC T4/T5/T6	509
9.0	492210	Explosion proof increased safety and encapsulated electrical part "eb", " Booster", 50 mm	1.0 to 1.8	-	-40°C to +75°C	-	IP66	II 2 G Ex eb mb IIC T5/T6	506
9.0	496565	Explosion proof intrinsically safe electrical part "ia", " Booster", 37 mm	0.77 to 2.58	-	-40°C to +80°C	-	IP67	II 1 G Ex ia IIC T4/T5/T6	510
9.0	492965.01	Explosion proof intrinsically safe electrical part "ia", " Booster", 50 mm	0.3 to 2.3	-	-40°C to +65°C	-	IP66	II 1 G Ex ia IIC T6	511
10.1	496895	Coil for DIN plug connection for oil and gas, 37 mm	8.0	8.0	-40°C to +50°C	-	IP65	-	468
10.1	496560	Flame proof encapsulated electrical part "db mb", 37 mm	8.0	8.0	-40°C to +65°C	-	IP67	II 2 G Ex db mb IIC T4	501
10.1	496800	Flame proof encapsulated electrical part "db mb", 37 mm	8.0	8.0	-40°C to +65°C	-	IP67	II 2 G Ex db mb IIC T4	502
10.1	492310	Explosion proof increased safety and encapsulated electrical part "eb", 50 mm	6.0	6.0	-40°C to +75°C	-	IP66	II 2 GD Ex eb mb II T4/T5	505
10.2	496555	Flame proof encapsulated electrical part "db mb", 37 mm	6.0	6.0	-40°C to +65°C	-	IP67	II 2 G Ex db mb IIC T4/T5/T6	501
10.2	496700	Flame proof encapsulated electrical part "db mb", 37 mm	6.0	6.0	-40°C to +65°C	-	IP67	II 2 G Ex db mb IIC T4/T5/T6	502
10.3	497105	Flame proof electrical part "d"	8.0	8.0	-50°C to +80°C		IP66	II 2 G Ex db IIC T4/T5/T6	493
11.0	483270	Flame proof electrical part "db", 50 mm	8.0	8.0	-40°C to +80°C	-	IP66	II 2 G Ex db IIC T4/T5/T6	492
12.0	482870.01	Explosion proof intrinsically safe electrical part "ia", 50 mm	3.0	-	-40°C to +65°C	-	IP66	II 1 G Ex ia IIC T6	512
12.0	492335	Explosion proof intrinsically safe electrical part, "NEMA", 50 mm	3.0	-	-40°C to +60°C	-	NEMA 4 - 4X	Cl. I, Div.I, Gr. A, B, C, D	512
13.0	495294	Coil with ISO-DIN connector, 12-24VDC for transportation applications, 32 mm	9.0	-	-40°C to +120°C	-	IP69K	-	481
13.0	496193	Coil with ISO-DIN connector, 12-24VDC for transportation applications, 32 mm	9.0	-	-40°C to +120°C	-	IP69K	-	481
14.1	483824	Coil with screw terminal, high temperature-high power, 40 mm	19.0	19.0	-40°C to +50°C	-	IP 44 to 67	-	477
14.2	483764	Coil for DIN plug connection, 32 mm, UL	-	9.0	-40°C to +50°C	●	IP65	-	451
14.3	483541	Coil with screw terminal, high temperature-high power, 40 mm	20.0	20.0	-40°C to +50°C	-	IP 44 to 67	-	478
20.0	ZB12	Coil for DIN plug connection	12.0	-	-10°C to +50°C	-	IP65	-	460
20.0	ZB09	Coil for DIN plug connection, UL for AC	-	9.0	-10°C to +50°C	●	IP65	-	460
20.1	YB12	Coil with flying leads, IP67	12.0	-	-10°C to +50°C	-	IP67	-	469
20.1	YB09	Coil with flying leads, IP67, UL for AC	-	9.0	-10°C to +50°C	●	IP67	-	469
20.2	ZB16	Coil for DIN plug connection, high power -high temperature series	16.0	-	-10°C to +50°C	-	IP65	-	461
20.2	ZH16	Coil for DIN plug connection, high power -high temperature series	16.0	-	-10°C to +80°C	-	IP65	-	461
20.2	ZB14	Coil for DIN plug connection, high power -high temperature series	-	14.0	-10°C to +50°C	-	IP65	-	461
20.2	ZH14	Coil for DIN plug connection, high power -high temperature series	-	14.0	-10°C to +80°C	-	IP65	-	461
21.0	JB14	Coil for DIN plug connection	16.0	-	-10°C to +50°C	-	IP65	-	462
21.0	JB16	Coil for DIN plug connection	-	14.0	-10°C to +50°C	-	IP65	-	462
22.0	KT10	Coil for DIN plug connection	10.0	-	-10°C to +50°C	-	IP65	-	463
22.0	KH09	Coil for DIN plug connection	-	9.0	-10°C to +80°C	-	IP65	-	463
22.0	KT09	Coil for DIN plug connection	-	9.0	-10°C to +50°C	-	IP65	-	463
23.0	XT09	Coil for DIN plug connection	-	9.0	-10°C to +50°C	-	IP54	-	464
24.0	D5	Coil for DIN plug connection, 32 mm	9.0	8.0	-40°C to +50°C	-	IP65	-	466
24.0	LA	Coil with flying leads, IP67, 32 mm	9.0	9.0	-10°C to +50°C	-	IP67	-	470
24.0	D4	Coil for DIN plug connection, 32 mm, UL	16.0	13.0	-40°C to +50°C	●	IP65	-	465
24.0	LB-LC	Coil with flying leads, IP 67, 32 mm, UL	16.0	13.0-14.0	-10°C to +50°C	●	IP67	-	471
24.0	XS03	Coil for DIN plug connection, 32 mm	-	9.0	-40°C to +50°C	-	IP65	-	467

INDEX BY VALVE REFERENCE

Valve Order Number	Page
360451J	186
360452J	186
360469	90
360470	126
360475	126
360479J	226
360480J	226
360490J	226
360506	226
361810	46
361850	46
361910	46
361950	46
362262	134
362263	134
362264	136
362265	136
362290	38
362410J	220
362460J	220
362470J	220
362475J	220
362496J	126, 178
362510J	180
362518J	126, 180
362524J	126, 180
362530J	180
362560J	208
362570J	208
362620J	208
362630J	208
363282	38
363378	28, 80
363380	28, 30
363390	30, 80
363444	30, 82
363457	30, 82
363467	30, 82
363475	38
363570	38
364010	182
364035	182
364520	134
364530	136
364535	136
364880J	126
364884J	126
366501	54
366511	54
366521	54
366531	54
366601	68
366606	68
366611	68
366616	68
366770	54
366775	54
390005	178
390034	178
390085	178
390086	178
390088	178
390089	178
390120	178
390145	178
390150	178
390165	178
390195	178
390215	178
390216	178
390300	178
390405	178
390445	178
390457	178
390458	178
390465	178
390495	178
390505	178
390525	180
390560	180
390580	180
390605	180
390625	180
390626	180
390650	182
390668	180
390700	180
390705	182
390718	182
390720	182
390721	182
390725	180
390802	180
390803	180
390805	180
390813	180
390874	180
390875	180
390878	180
390895	180
390915	180
390945	180
390975	180
390995	180
390997	180
392169	82
392170	82
392173	82
392335	80
392349	80
392355	80
392366	80
392370	80
392372	80
392388	80
392389	80
392395	82
392396	82
392408	82
392409	82
397146J	90
398000	28
398001	28
398003	28
398006	30
398007	30
398008	30
398010	30
398012	30
398013	28
398014	28
398016	28
398017	28
398018	28
398022	28
398024	28
398026	28
398030	28
398034	28
398052	28
398100	208
398102	208
398104	208
398112	208
398114	208
398120	208
398122	208
398130U	208
398132	208
398134U	208
398136U	208
398138	208
398142	208
443776W	94
443777W	94
443778W	94

INDEX BY VALVE REFERENCE

Valve Order Number	Page
443779W	94
443780W	94
443781W	94
443782W	94
443783W	94
443784W	116
443785W	94
443786W	94
443787W	94
443788W	116
443789W	94
443790W	96
443791W	96
443792W	116
443793W	96
443794W	96
443795W	96

Valve Order Number	Page
443796W	116
443797W	96
443798W	96
443799W	96
443800W	116
443801W	96
443802W	116
443803W	116
443804W	94
443805W	106
443806W	106
443807W	106
443808W	106
443809W	106
443810W	106
443811W	106
444492W	94

Valve Order Number	Page
444494W	94
444497W	94
444499W	106
444500W	106
444501W	106
444502W	106
444503W	106
444513W	106
444576W	106
444600W	106
444601W	106
444602W	106
444603W	106
444604W	106
444605W	106

INDEX FOR VALVES

	Valve Reference	Page
U	033X0111	330
U	033X5152	400
U	033X5156	400
U	033X51561D	400
U	033X5195	402
U	033X5256	404
U	033X52561D	404
U	033X7156	402
PM	120.4AR	186
PM	120.4IR	186
	121F2523	188
E	121F43	42,146
E	121F4302	42,92
	121F4317	42
E	121F44	42,146
E	121F4406	42,92
	121F4417	42
	121F47	42
	121F4706	42,146
	121F63	42,146
	121F64	42,146
	121F67	42,146
	121G2320	184
	121G2520	184
	121G2523	184
	121K01	34,84
	121K0103	128
	121K0106	34,84
	121K0113	128
	121K0150	34,84
	121K02	34,84
	121K0250	34,84
E	121K03	34,142,144
E	121K0302	34,84
	121K0323	128
E	121K0352	34,84
	121K0397	34
E	121K04	32,142
E	121K0402	32,84
	121K0497	32
E	121K07	32
	121K0706	32,84
	121K1302	32
E	121K14	32,142
E	121K23	32,142

	Valve Reference	Page
	121K2423	184
	121K3106	36,86,144
	121K3206	36,86,144
	121K3303	128
	121K3306	36,86,144
	121K3321	184
E	121K45	36,86
E	121K4503	128
E	121K46	36,86
E	121K4603	128
	121K6220	184
E	121K63	34,142
E	121K64	34,144
	121K6423	184
E	121K65	32,142
E	121K67	32,142
	121M13	32,84
	121M14	32,84
	121V5106	160
	121V5112	160
	121V5163	130,160
	121V5206	160
	121V5212	160
	121V5263	130,160
	121V5306	158
	121V5363	130,158
	121V5397	160
	121V5406	158
	121V5463	130,158
	121V5497	158
U	121V5595	170
U	121V5596	170
U	121V55961D	170
	121V5706	158
	121V5763	130,158
	122F44	44
	122K83	40
	122K8306	40,86
	122K8321	188
	122K8363	40,144
	122K84	40,144
	122K8406	40
	122K8408	40,144
	122K9321	188
	122K9363	40,144

	Valve Reference	Page
	122V8306	162
PM	123AV	46
PM	123CV	46
PM	123DV	46
PM	123IV	46
PM	125BV	90
PM	125CV.2	90
	125K01	40,88
	125K03	40
PM	126YH	126
PM	126YT	126
PM	128GR	226
PM	128IR	226
PM	128ISV	226
PM	128IV	226
	131.4BV	178
	131.4CG	180
	131.4FV	180
	131.4GG	180
	131.4GV	180,182
	131AN	178
	131B04	234
	131B14	234
E	131E03	216,306
E	131F26	238
E	131F43	230
E	131F4350	230
	131F4397	312
E	131F44	230
	131F4410	228
E	131F4450	230
	131F4490	228
	131F4497	228
	131F46	230
	131F4650	230
U	131F5295	384
	131F5406	236
U	131F5695	384
U	131F56951D	384
	131IN	178
	131INDIN	178
	131IV	178
E	131K03	216
E	131K0308	216,306
E	131K0350	216,306

	Valve Reference	Page
E	131K0358	210,302
	131K0397	210,214
E	131K04	212,304
E	131K0450	212,304
	131K0490	210,302
	131K0497	212,304
E	131K06	214,304
	131K0648	272
E	131K0650	214,304
E	131K13	210
E	131K14	210
	131K16	210
	131K1650	210
E	131K63	216
E	131K6350	216
E	131K64	212
E	131K6450	212
	131M14	210,302
	131M15	210,302
	131M74	228
	131M7450	228
	131M75	228
	131M7550	228
	131T21	216
	131T2101	306
	131T22	216
	131T23	212
	131T2301	212
	131T29	214
	131T2901	214
	131V5306	252
	131V5363	252
	131V5397	252
	131V5406	252
	131V5463	252
	131V5490	252
	131V5497	252
	131X1101	334
U	131X1101	334
	131X1131	334
U	131X1201	386
	132F43	230
	132F44	230
	132F46	230
	132K03	218

INDEX FOR VALVES

	Valve Reference	Page
	132K04	218
	132K06	218
	132T22	218
	132T23	218
	132T2301	218
	132T29	308
E	133F43	232
E	133F44	232
E	133F4450	232
	133F46	232
	133F4650	312
E	133K03	222
E	133K0350	222
E	133K04	222
E	133K0450	222
	133K0497	222
E	133K05	222
E	133K06	222
E	133K0650	222
E	133K13	222
E	133K14	222
E	133K16	222
	133T21	222
	133T2101	224
	133T23	222
	133T2301	222
	133V5306	254
	133V5363	254
	133V5406	254
	133V5463	254
U	133V5595	376
U	133V55951D	376
U	133V5695	376
U	133V56951D	376
U	133V7595	376
U	133V7695	376
	133X01	314
U	133X01	314
	133X01001D	314
U	133X0111	308
U	133X01111D	308
U	133X0131	310
U	133X5152	378
U	133X5156	378
U	133X51561D	378

	Valve Reference	Page
U	133X5192	378
U	133X5195	384
U	133X51951D	386
U	133X5196	378
U	133X51961D	380
U	133X5296	382
U	133X52961D	382
U	133X7156	380
U	133X7195	386
U	133X7196	380
PM	135AT	134
PM	135CT	136
PM	135DT	136
PM	135IT	134
	135K03	310
	135K04	224
PM	136.2FV	38
PM	136YV	38
PM	139AV	220
PM	139FV	220
PM	139GV	220
PM	139LV	220
PM	140.4AR	180
PM	140.4DR	180
PM	140CR	126,180
PM	140DR	126,180
PM	140IR	126,178
PM	141AV	208
PM	141BV	208
PM	141FV	208
PM	141GV	208
PM	146.3ABV	30,82
PM	146.3KV	30,82
PM	146BV	28,80
PM	146FV	28,30,80
PM	146HV	30,80
PM	146WV	30,82
PM	146YV	30,82
PM	151GV	38
PM	151HV	38
PM	153BV	182
PM	153GV	182
PM	156.2AR	134
PM	156.2CR	136
PM	156.2DR	136

	Valve Reference	Page
PM	156.2IR	134
PM	158IH	126
PM	158IT	126
	161.4AV	80
	161.4BV	80
	161.4EV	82
PM	168.1AN	54
PM	168.1CN	54
PM	168.1DN	54
PM	168.1IN	54
PM	169.1AN	68
PM	169.1CN	68
PM	169.1DN	68
PM	169.1IN	68
PM	173AN	54
PM	173IN	54
	2019F1GRG7	202
	2019F1GVG7	202
	2019F1JRG7	202
	2019F1JVG7	202
	2019F1LRG7	202,204
	2019F1LVG7	204
	2019F1NRG7	204
	2019F1NVG7	204
	201LG1GVG2	166
	201LG1JVG2	166
	201LG1LVG2	166
	201LG2GVG2	166
	201LG2JVG2	166
	201LG2LVG2	166
	201LG2NVG7	166
	201LG2PVG7	166
	201LG3SVG7	168
	201LG3UVG7	168
	201LG4SVG7	168
	201LG4UVG7	168
	221G13	48
	221G1303	132
	221G1330	132
	221G15	48
	221G1503	132
	221G1530	48
	221G16	50
	221G1603	132
	221G1610	50

	Valve Reference	Page
	221G1630	50
	221G1631	50
	221G17	52
	221G1703	132
	221G1710	52
	221G1730	52
	221G1731	114
	221G21	52
	221G2103	114
	221G2106	52
	221G2110	52
	221G2130	52
	221G2131	114
	221G2136	52
	221G23	48
	221G2330	48
	221G25	48
	221G2523	190
	221G2530	48
	221G26	50
	221G2630	50
	221G27	52
	221G2730	52
	221J3301E	198
	221S10E	172
	221S10F	172
	221S15E	172
	221S15F	172
	221S20E	172
	221S20F	172
	221S25E	174
	221S25F	174
	3019F1GRG7	258
	3019F1GVG7	258
	3019F1JRG7	258,260
	3019F1JVG7	260
	3019F1LRG7	260
	3019F1LVG7	260
	3019F1NRG7	262
	3019F1NVG7	262
	301XGFRTG7	258
	301XGFRTJ7	260
	301XGFRTL7	260
	301XGFRTN7	262
	301XGFVTG7	258

INDEX FOR VALVES

	Valve Reference	Page
	301XGFVTJ7	260
	301XGFVTL7	260,262
	301XGFVTN7	262
	321F2523	194
E	321F32	76,110
E	321F3202	76,154
	321F35	76
E	321G36	62,102
E	321G3606	62
E	321G3610	118
E	321G37	64,104
E	321G3706	64
E	321G3710	120
	321G3790	64
E	321G38	64,104
E	321G3806	64
E	321G3810	120
E	321G39	66,104
E	321G3906	66
E	321G3910	120
	321G3990	66
E	321G40	66,104
E	321G4006	66
E	321G4010	120
	321G4090	66
E	321H11	56,148
E	321H13	58,148
E	321H15	60,150
	321H1590	60
E	321H21	148,192
E	321H23	148,192
	321H2322	192
E	321H25	150,194
	321H2522	194
	321H2523	194
	321H35	60
	321H36	62
E	321K10	56,98
E	321K13	58,98
E	321K1314	58,98
E	321K15	60,100
E	321K1503	138
E	321K1514	60,100
	321K1523	268
	321K1535	266

	Valve Reference	Page
	321K1536	268
	321K1537	268
	321K1543	266
E	321K25	60,100
	321K31	56,98
	321K3106	56
	321K33	58,98
	321K3306	58
	321K35	60,100
	321K3506	60
	321K36	62,102
	321K3606	62
	321K37	64,104
	321K3706	64
	321K4106	98,118
	321K4156	56
	321K4306	98,118
	321K4356	58
	321K4506	100,118
	321K4556	100,118
	321K4606	102,118
	321K4656	102,118
	321K4706	104,120
	321K4756	104,120
E	321K63	148
	322F35	76
	322F72	76
	322F7206	76,154
	322G36	72,108
	322G3606	72
	322G3610	122
	322G37	72,110
	322G3706	72
	322G3710	122
	322G38	72
	322G3806	72
	322G3810	122
	322G39	72,110
	322G3906	72
	322G3910	122
	322G40	72
	322G4006	72
	322G4010	122
	322G75	70,108
	322G7506	70,152

	Valve Reference	Page
	322H35	70
	322H36	72
	322H71	70
	322H7106	70,152
	322H73	70,152
	322H7306	70,152
	322H75	70,152
	322H7506	70,152
	322K4106	108
	322K4306	108
	322K4506	108
	322K4606	108
	322K4706	110
	325K4106	74
	325K4306	74
	325K4506	74
	325K4606	74
	325K4706	74
E	331B01	240
	331B02	248
	331B0216	248
E	331B21	242
E	331B74	240
	331B7490	240
E	331L21	244
	331N03	336
	331N04	336
	331N0402	336
	331N34	338
	331N3402	338
E	332B01	242
	332B02	242
E	332B21	244
E	341B01	278
	341B02	276
E	341B21	278
	341B34	276
	341B3403	276
	341B3440	276
	341B3490	276
E	341F21	278
	341F34	284
	341F3403	284
	341F3440	284
E	341L01	294

	Valve Reference	Page
	341L0197	294
E	341L02	292
	341L04	294
	341L05	294
	341L11	290
E	341L1130	290
U	341L1130	290
E	341L21	286
	341L2190	286
	341L9101	282
	341L9201	286
	341L9504	362
	341L9534	362
	341L9594	364
	341L9597	364
	341L9598	364
	341N01	340
	341N02	346
U	341N0250	396
	341N03	350
	341N04	350
	341N05	344
	341N0502	346
	341N11	340
	341N12	348
	341N21	340
	341N2190	340
	341N22	348
	341N31	342
	341N3102	342
	341N3108	342
	341N3128	342
	341N3130	342
	341N3190	342
	341N3196	342
	341N3197	342
	341N32	348
	341N3202	348
U	341N3250	394
	341N3290	344
U	341N3292	394
U	341N3295	394
	341N3296	344
	341N3297	344
	341N34	350

INDEX FOR VALVES

	Valve Reference	Page
	341N35	346
	341N3502	346
	341P01	316
	341P02	318
U	341P0250	388
	341P03	318
	341P04	322
	341P21	316
	341P2108	316
	341P2190	318
	341P2197	316
	341P22	320
	341P2290	320
	341P2297	320
U	341P3250	388
U	341P3292	390
	341P3295	390
	341P33	318
	341P34	322
	342N03	358
	342N11	358
	342N3197	358
	342N33	358
	343N03	360
	345B04	280
	345B24	280
	345B34	280
	345F34	284
	345L01	296
	345L21	288
	345N31	362
	345P21	328
	347L04	288
	347L11	292

	Valve Reference	Page
E	347L1130	292
	347L9101	282
	347L9201	288
	347N03	354
	347N04	356
	347N11	352
	347N12	354
	347N31	352
	347N3190	352
	347N3197	352
	347N32	354
U	347N3250	398
	347N33	354
	347N34	356
	347P01	324
	347P02	326
	347P03	326
	347P04	328
	347P21	324
	347P2190	324
	347P2197	324
	347P22	326
U	347P3250	392
U	347P3295	392
	347P33	326
	347P34	328
	421F35	76
U	441P3250	388
	531N03	366
	531N04	366
	541L01	298
	541N01	368
	541N0108	368
	541N03	370

Valve Reference	Page
541N04	370
542N03	372
547N03	370
7321BAH00	94
7321BAN00	94
7321BAN01	94
7321BAV00	94
7321BCH00	94
7321BCN00	94
7321BCN01	94
7321BCN02	116
7321BCV00	94
7321BDH00	94
7321BDN00	94
7321BDN01	94
7321BDN02	116
7321BDV00	94
7321BEH00	96
7321BEN00	96
7321BEN01	96
7321BEN02	116
7321BFH00	96
7321BFN00	96
7321BFN01	96
7321BFN02	116
7321BGH00	96
7321BGN00	96
7321BGN01	96
7321BGN02	116
7321BIH00	94
7321BIN00	94
7321BIN01	94
7321BIV00	94
7321BLN02	116

Valve Reference	Page
7321BMN02	116
7322BAH00	106
7322BAN00	106
7322BAV00	106
7322BCH00	106
7322BCN00	106
7322BCV00	106
7322BDH00	106
7322BDN00	106
7322BDV00	106
7322BEH00	106
7322BEN00	106
7322BFH00	106
7322BFN00	106
7322BGH00	106
7322BGN00	106
7322BIH00	106
7322BIN00	106
7322BIV00	106
7322BLN06	106
7322BMN06	106
N74.4AV	28
N74.4AVA.5	28
N74.4FV	28
N74.4IV	28
N74.4WV	30
N79.4AV	208
N79.4IV	208
N79.6AV	208
N79.6BV	208

WARNING - USER RESPONSIBILITY

FAILURE OR IMPROPER SELECTION OR IMPROPER USE OF THE PRODUCTS DESCRIBED HEREIN OR RELATED ITEMS CAN CAUSE DEATH, PERSONAL INJURY AND PROPERTY DAMAGE.

- This document and other information from Parker-Hannifin Corporation, its subsidiaries and authorized distributors provide product or system options for further investigation by users having technical expertise.
- The user, through its own analysis and testing, is solely responsible for making the final selection of the system and components and assuring that all performance, endurance, maintenance, safety and warning requirements of the application are met. The user must analyze all aspects of the application, follow applicable industry standards, and follow the information concerning the product in the current product catalog and in any other materials provided from Parker or its subsidiaries or authorized distributors.
- To the extent that Parker or its subsidiaries or authorized distributors provide component or system options based upon data or specifications provided by the user, the user is responsible for determining that such data and specifications are suitable and sufficient for all applications and reasonably foreseeable uses of the components or systems.

Parker's Motion & Control Technologies

At Parker, we're guided by a relentless drive to help our customers become more productive and achieve higher levels of profitability by engineering the best systems for their requirements.
It means looking at customer applications from many angles to find new ways to create value.
Whatever the motion and control technology need, Parker has the experience, breadth of product and global reach to consistently deliver.
No company knows more about motion and control technology than Parker.

For further info call 00800 27 27 5374

Aerospace

Key Markets

- Aftermarket services
- Commercial transports
- Engines
- General & business aviation
- Helicopters
- Launch vehicles
- Military aircraft
- Missiles
- Power generation
- Regional transports
- Unmanned aerial vehicles

Key Products

- Control systems & actuation products
- Engine systems & components
- Fluid conveyance systems & components
- Fluid metering, delivery & atomization devices
- Fuel systems & components
- Fuel tank inerting systems
- Hydraulic systems & components
- Thermal management
- Wheels & brakes

Climate Control

Key Markets

- Agriculture
- Air conditioning
- Construction Machinery
- Food & beverage
- Industrial machinery
- Life sciences
- Oil & gas
- Precision cooling
- Process
- Refrigeration
- Transportation

Key Products

- Accumulators
- Advanced actuators
- CO_2 controls
- Electronic controllers
- Filter driers
- Hand shut-off valves
- Heat exchangers
- Hose & fittings
- Pressure regulating valves
- Refrigerant distributors
- Safety relief valves
- Smart pumps
- Solenoid valves
- Thermostatic expansion valves

Hydraulics

Key Markets

- Aerial lift
- Agriculture
- Alternative energy
- Construction machinery
- Forestry
- Industrial machinery
- Machine tools
- Marine
- Material handling
- Mining
- Oil & gas
- Power generation
- Refuse vehicles
- Renewable energy
- Truck hydraulics
- Turf equipment

Key Products

- Accumulators
- Cartridge valves
- Electrohydraulic actuators
- Human machine interfaces
- Hybrid drives
- Hydraulic cylinders
- Hydraulic motors & pumps
- Hydraulic systems
- Hydraulic valves & controls
- Hydrostatic steering
- Integrated hydraulic circuits
- Power take-offs
- Power units
- Rotary actuators
- Sensors

Pneumatics

Key Markets

- Aerospace
- Conveyor & material handling
- Factory automation
- Life science & medical
- Machine tools
- Packaging machinery
- Transportation & automotive

Key Products

- Air preparation
- Brass fittings & valves
- Manifolds
- Pneumatic accessories
- Pneumatic actuators & grippers
- Pneumatic valves & controls
- Quick disconnects
- Rotary actuators
- Rubber & thermoplastic hose & couplings
- Structural extrusions
- Thermoplastic tubing & fittings
- Vacuum generators, cups & sensors

Electromechanical

Key Markets

- Aerospace
- Factory automation
- Life science & medical
- Machine tools
- Packaging machinery
- Paper machinery
- Plastics machinery & converting
- Primary metals
- Semiconductor & electronics
- Textile
- Wire & cable

Key Products

- AC/DC drives & systems
- Electric actuators, gantry robots & slides
- Electrohydrostatic actuation systems
- Electromechanical actuation systems
- Human machine interface
- Linear motors
- Stepper motors, servo motors, drives & controls
- Structural extrusions

Filtration

Key Markets

- Aerospace
- Food & beverage
- Industrial plant & equipment
- Life sciences
- Marine
- Mobile equipment
- Oil & gas
- Power generation & renewable energy
- Process
- Transportation
- Water Purification

Key Products

- Analytical gas generators
- Compressed air filters & dryers
- Engine air, coolant, fuel & oil filtration systems
- Fluid condition monitoring systems
- Hydraulic & lubrication filters
- Hydrogen, nitrogen & zero air generators
- Instrumentation filters
- Membrane & fiber filters
- Microfiltration
- Sterile air filtration
- Water desalination & purification filters & systems

Fluid & Gas Handling

Key Markets

- Aerial lift
- Agriculture
- Bulk chemical handling
- Construction machinery
- Food & beverage
- Fuel & gas delivery
- Industrial machinery
- Life sciences
- Marine
- Mining
- Mobile
- Oil & gas
- Renewable energy
- Transportation

Key Products

- Check valves
- Connectors for low pressure fluid conveyance
- Deep sea umbilicals
- Diagnostic equipment
- Hose couplings
- Industrial hose
- Mooring systems & power cables
- PTFE hose & tubing
- Quick couplings
- Rubber & thermoplastic hose
- Tube fittings & adapters
- Tubing & plastic fittings

Process Control

Key Markets

- Alternative fuels
- Biopharmaceuticals
- Chemical & refining
- Food & beverage
- Marine & shipbuilding
- Medical & dental
- Microelectronics
- Nuclear Power
- Offshore oil exploration
- Oil & gas
- Pharmaceuticals
- Power generation
- Pulp & paper
- Steel
- Water/wastewater

Key Products

- Analytical Instruments
- Analytical sample conditioning products & systems
- Chemical injection fittings & valves
- Fluoropolymer chemical delivery fittings, valves & pumps
- High purity gas delivery fittings, valves, regulators & digital flow controllers
- Industrial mass flow meters/controllers
- Permanent no-weld tube fittings
- Precision industrial regulators & flow controllers
- Process control double block & bleeds
- Process control fittings, valves, regulators & manifold valves

Sealing & Shielding

Key Markets

- Aerospace
- Chemical processing
- Consumer
- Fluid power
- General industrial
- Information technology
- Life sciences
- Microelectronics
- Military
- Oil & gas
- Power generation
- Renewable energy
- Telecommunications
- Transportation

Key Products

- Dynamic seals
- Elastomeric o-rings
- Electro-medical instrument design & assembly
- EMI shielding
- Extruded & precision-cut, fabricated elastomeric seals
- High temperature metal seals
- Homogeneous & inserted elastomeric shapes
- Medical device fabrication & assembly
- Metal & plastic retained composite seals
- Shielded optical windows
- Silicone tubing & extrusions
- Thermal management
- Vibration dampening

ENGINEERING YOUR SUCCESS.

Parker Worldwide

Europe, Middle East, Africa

AE - United Arab Emirates, Dubai
Tel: +971 4 8127100
parker.me@parker.com

AT - Austria, Wiener Neustadt
Tel: +43 (0)2622 23501-0
parker.austria@parker.com

AT - Eastern Europe, Wiener Neustadt
Tel: +43 (0)2622 23501 900
parker.easteurope@parker.com

AZ - Azerbaijan, Baku
Tel: +994 50 2233 458
parker.azerbaijan@parker.com

BE/LU - Belgium, Nivelles
Tel: +32 (0)67 280 900
parker.belgium@parker.com

BY - Belarus, Minsk
Tel: +375 17 209 9399
parker.belarus@parker.com

CH - Switzerland, Etoy
Tel: +41 (0)21 821 87 00
parker.switzerland@parker.com

CZ - Czech Republic, Klecany
Tel: +420 284 083 111
parker.czechrepublic@parker.com

DE - Germany, Kaarst
Tel: +49 (0)2131 4016 0
parker.germany@parker.com

DK - Denmark, Ballerup
Tel: +45 43 56 04 00
parker.denmark@parker.com

ES - Spain, Madrid
Tel: +34 902 330 001
parker.spain@parker.com

FI - Finland, Vantaa
Tel: +358 (0)20 753 2500
parker.finland@parker.com

FR - France, Contamine s/Arve
Tel: +33 (0)4 50 25 80 25
parker.france@parker.com

GR - Greece, Athens
Tel: +30 210 933 6450
parker.greece@parker.com

HU - Hungary, Budapest
Tel: +36 23 885 470
parker.hungary@parker.com

IE - Ireland, Dublin
Tel: +353 (0)1 466 6370
parker.ireland@parker.com

IT - Italy, Corsico (MI)
Tel: +39 02 45 19 21
parker.italy@parker.com

KZ - Kazakhstan, Almaty
Tel: +7 7272 505 800
parker.easteurope@parker.com

NL - The Netherlands, Oldenzaal
Tel: +31 (0)541 585 000
parker.nl@parker.com

NO - Norway, Asker
Tel: +47 66 75 34 00
parker.norway@parker.com

PL - Poland, Warsaw
Tel: +48 (0)22 573 24 00
parker.poland@parker.com

PT - Portugal, Leca da Palmeira
Tel: +351 22 999 7360
parker.portugal@parker.com

RO - Romania, Bucharest
Tel: +40 21 252 1382
parker.romania@parker.com

RU - Russia, Moscow
Tel: +7 495 645-2156
parker.russia@parker.com

SE - Sweden, Spånga
Tel: +46 (0)8 59 79 50 00
parker.sweden@parker.com

SK - Slovakia, Banská Bystrica
Tel: +421 484 162 252
parker.slovakia@parker.com

SL - Slovenia, Novo Mesto
Tel: +386 7 337 6650
parker.slovenia@parker.com

TR - Turkey, Istanbul
Tel: +90 216 4997081
parker.turkey@parker.com

UA - Ukraine, Kiev
Tel +380 44 494 2731
parker.ukraine@parker.com

UK - United Kingdom, Warwick
Tel: +44 (0)1926 317 878
parker.uk@parker.com

ZA - South Africa, Kempton Park
Tel: +27 (0)11 961 0700
parker.southafrica@parker.com

North America

CA - Canada, Milton, Ontario
Tel: +1 905 693 3000

US - USA, Cleveland
Tel: +1 216 896 3000

Asia Pacific

AU - Australia, Castle Hill
Tel: +61 (0)2-9634 7777

CN - China, Shanghai
Tel: +86 21 2899 5000

HK - Hong Kong
Tel: +852 2428 8008

IN - India, Mumbai
Tel: +91 22 6513 7081-85

JP - Japan, Tokyo
Tel: +81 (0)3 6408 3901

KR - South Korea, Seoul
Tel: +82 2 559 0400

MY - Malaysia, Shah Alam
Tel: +60 3 7849 0800

NZ - New Zealand, Mt Wellington
Tel: +64 9 574 1744

SG - Singapore
Tel: +65 6887 6300

TH - Thailand, Bangkok
Tel: +662 186 7000-99

TW - Taiwan, Taipei
Tel: +886 2 2298 8987

South America

AR - Argentina, Buenos Aires
Tel: +54 3327 44 4129

BR - Brazil, Sao Jose dos Campos
Tel: +55 800 727 5374

CL - Chile, Santiago
Tel: +56 2 623 1216

MX - Mexico, Apodaca
Tel: +52 81 8156 6000

Ed. 2014-08-18

© 2014 Parker Hannifin Corporation.
All rights reserved.

General Catalogue FCDE/0110/UK/V2.0 - 08/2014

EMEA Product Information Centre
Free phone: 00 800 27 27 5374
(from AT, BE, CH, CZ, DE, DK, EE, ES, FI, FR, IE, IL. IS, IT, LU, MT, NL, NO, PL, PT, RU, SE, SK, UK, ZA)

US Product Information Centre
Toll-free number: 1-800-27 27 537
www.parker.com